Surface Mount Multilayer Ceramic Chip Capacitors for Commodity Applications

FEATURES

- Available from 0402 to 1210 body sizes
- Ultra stable C0G (NP0) dielectric
- High capacitance in X5R, X7R
- Ni-barrier with 100 % tin terminations
- Dry sheet technology process
- Base Metal Electrode system (BME)
- Material categorization: for definitions of compliance please see www.vishay.com/doc?99912

Pb-free
RoHS COMPLIANT
HALOGEN FREE
GREEN (5-2008)

APPLICATIONS

- Consumer electronics
- Telecommunications
- Data processing
- Mobile applications

ELECTRICAL SPECIFICATIONS

Operating Temperature:

C0G (NP0): -55 °C to +125 °C
X5R: -55 °C to +85 °C
X7R: -55 °C to +125 °C

Capacitance Range:

C0G (NP0): 0.5 pF to 39 nF
X5R: 47 nF to 220 µF
X7R: 100 pF to 47 µF

Voltage Range:

C0G (NP0): 10 V_{DC} to 100 V_{DC}
X5R: 6.3 V_{DC} to 50 V_{DC}
X7R: 10 V_{DC} to 100 V_{DC}

Temperature Coefficient of Capacitance (TCC):

C0G (NP0): 0 ppm/°C ± 30 ppm/°C from -55 °C to +125 °C
X5R: ± 15 % from -55 °C to +85 °C without voltage applied
X7R: ± 15 % from -55 °C to +125 °C without voltage applied

Insulation Resistance (IR) at U_R:

≥ 10 GΩ or R x C ≥ 500 Ω x F whichever is less

Test Conditions for Capacitance Tolerance:

preconditioning for X5R, X7R MLCC: perform a heat treatment at +150 °C ± 10 °C for 1 h, then leave in ambient condition for 24 h ± 2 h before measurement

Test Conditions for Capacitance and DF Measurement:

measured at conditions of 30 % to 70 % related humidity.

C0G (NP0): Apply 1.0 V_{RMS} ± 0.2 V_{RMS}, 1.0 MHz ± 10 % for caps ≤ 1000 pF, at +25 °C ambient temperature
Apply 1.0 V_{RMS} ± 0.2 V_{RMS}, 1.0 kHz ± 10 % for caps > 1000 pF, at +25 °C ambient temperature

X5R / X7R: Caps ≤ 10 µF apply 1.0 V_{RMS} ± 0.2 V_{RMS}, 1.0 kHz ± 10 %, at +25 °C ambient temperature [(1)]
Caps > 10 µF apply 0.5 V_{RMS} ± 0.2 V_{RMS}, 120 Hz ± 20 %, at +25 °C ambient temperature

Note

(1) Test conditions: 0.5 V_{RMS} ± 0.2 V_{RMS}, 1 kHz ± 10 %
X7R: 0603: ≥ 2.2 µF / 10 V
0805: 10 µF (6.3 V and 10 V)
X5R: 0402: ≥ 4.7 µF / 6.3 V and ≥ 2.2 µF / 10 V
0603: 10 µF (6.3 V and 10 V)

Aging Rate:

C0G (NP0): 0 % per decade
X5R: 6.3 V_{DC} / 10 V_{DC}: 3 % maximum per decade
16 V_{DC} / 25 V_{DC}: 2 % maximum per decade
X7R: ≤ 10 V_{DC}: 1.5 % maximum per decade
≥ 16 V_{DC}: 1 % maximum per decade

Dielectric Strength Test:

this is the maximum voltage the capacitors are tested 1 s to 5 s period and the charge / discharge current does not exceed 50 mA.

≤ 100 V_{DC}: 250 % of rated voltage

For technical questions, contact: mlcc@vishay.com
THIS DOCUMENT IS SUBJECT TO CHANGE WITHOUT NOTICE. THE PRODUCTS DESCRIBED HEREIN AND THIS DOCUMENT ARE SUBJECT TO SPECIFIC DISCLAIMERS, SET FORTH AT www.vishay.com/doc?91000

Dissipation Factor (DF):

C0G (NP0): Cap. < 30 pF: Q ≥ 400 + 20C
Cap. ≥ 30 pF: Q ≥ 1000

X5R, X7R:

RATED VOLTAGE	D.F. ≤	EXCEPTION OF D.F. ≤	
≥ 100 V	2.5 %	3 %	1206 ≥ 0.47 µF
		5 %	0603 ≥ 0.068 µF; 0805 > 0.1 µF; 1206 > 1 µF
≥ 50 V	2.5 %	3 %	0603 ≥ 0.047 µF; 0805 ≥ 0.18 µF; 1206 ≥ 0.47 µF
		5 %	1210 ≥ 4.7 µF
		10 %	0402 ≥ 0.1 µF; 0603 ≥ 1 µF; 0805 ≥ 1 µF; 1206 ≥ 2.2 µF; 1210 ≥ 10 µF
25 V	3.5 %	5 %	0805 ≥ 1 µF; 1210 ≥ 10 µF
		7 %	0603 ≥ 0.33 µF; 1206 ≥ 4.7 µF
		10 %	0402 ≥ 0.10 µF; 0603 ≥ 0.47 µF; 0805 ≥ 2.2 µF; 1206 ≥ 6.8 µF; 1210 ≥ 22 µF
16 V	3.5 %	5 %	0402 ≥ 0.033 µF; 0603 ≥ 0.15 µF; 0805 ≥ 0.68 µF; 1206 ≥ 2.2 µF; 1210 ≥ 4.7 µF
		10 %	0402 ≥ 0.22 µF; 0603 ≥ 0.68 µF; 0805 ≥ 2.2 µF; 1206 ≥ 4.7 µF; 1210 ≥ 22 µF
10 V	5 %	10 %	0402 ≥ 0.33 µF; 0402/X7R ≥ 0.22 µF 0603 ≥ 0.33 µF; 0805 ≥ 2.2 µF; 1206 ≥ 2.2 µF; 1210 ≥ 22 µF
		15 %	0402 ≥ 1 µF
6.3 V	10 %	15 %	0402 ≥ 1 µF; 0603 ≥ 10 µF; 0805 ≥ 4.7 µF; 1206 ≥ 47 µF; 1210 ≥ 100 µF
		20 %	0402 ≥ 2.2 µF
4 V	15 %	-	-

QUICK REFERENCE DATA

DIELECTRIC	CASE	MAXIMUM VOLTAGE (V)	CAPACITANCE	
			MINIMUM	MAXIMUM
C0G (NP0)	0402	100	0.5 pF	1.0 nF
	0603	100	0.5 pF	3.3 nF
	0805	100	0.5 pF	12 nF
	1206	100	1.5 pF	39 nF
X5R	0402	50	47 nF	10 µF
	0603	50	220 nF	22 µF
	0805	50	1.5 µF	47 µF
	1206	50	1.5 µF	100 µF
	1210	50	1.5 µF	220 µF
X7R	0402	50	100 pF	1.0 µF
	0603	100	100 pF	2.2 µF
	0805	100	100 pF	10 µF
	1206	100	150 pF	22 µF
	1210	100	1.0 nF	47 µF

Note

- Detail ratings see “Selection Chart”

For technical questions, contact: mlcc@vishay.com
THIS DOCUMENT IS SUBJECT TO CHANGE WITHOUT NOTICE. THE PRODUCTS DESCRIBED HEREIN AND THIS DOCUMENT ARE SUBJECT TO SPECIFIC DISCLAIMERS, SET FORTH AT www.vishay.com/doc?91000

ORDERING INFORMATION

VJ0402	Y	101	J	X	Q	C	W1BC
SIZE CODE	DIELECTRIC	CAPACITANCE	TOLERANCE	TERMINATION	VOLTAGE [1]	PACKAGING	PROCESS CODE FOR BASIC COMMODITY
0402 0603 0805 1206 1210	A = C0G (NP0) G = X5R Y = X7R	Two significant digits followed by the number of zeros: 1R0 = 1.0 pF 101 = 100 pF 102 = 1000 pF 152 = 1500 pF 103 = 10 000 pF 104 = 100 000 pF	**C0G (NP0)** [2] Cap. < 10 pF: B = ± 0.10 pF C = ± 0.25 pF D = ± 0.50 pF Cap. ≥ 10 pF: F = ± 1 % G = ± 2 % J = ± 5 % K = ± 10 % **X5R / X7R** [2][3] J = ± 5 % K = ± 10 % M = ± 20 %	X = Ni barrier 100 % matte tin	S = 4 V Y = 6.3 V Q = 10 V J = 16 V X = 25 V A = 50 V B = 100 V	C = 7" reel / paper tape P = 13" reel / paper tape T = 7" reel / plastic tape R = 13" reel / plastic tape	

Notes

- Detail rating see “Selection Chart”

(1) DC voltage rating should not be exceeded in application. Other application factors may affect the MLCC performance. Consult for questions: mlcc@vishay.com

(2) Not all values, see “Selection Chart”

(3) No 5 % tolerance for X5R

For technical questions, contact: mlcc@vishay.com
THIS DOCUMENT IS SUBJECT TO CHANGE WITHOUT NOTICE. THE PRODUCTS DESCRIBED HEREIN AND THIS DOCUMENT ARE SUBJECT TO SPECIFIC DISCLAIMERS, SET FORTH AT www.vishay.com/doc?91000

DIMENSIONS in inches (millimeters)

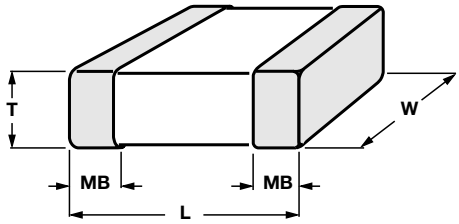

SIZE CODE	THICKNESS SYMBOL	SOLDERING METHOD (1)	L	W	T	MB
0402 (1005)	N	R	0.040 ± 0.002 (1.00 ± 0.05)	0.020 ± 0.002 (0.50 ± 0.05)	0.020 ± 0.002 (0.50 ± 0.05)	0.010 + 0.002 / - 0.004 (0.25 + 0.05 / - 0.10)
	E	R	0.040 ± 0.008 (1.00 ± 0.20)	0.020 ± 0.008 (0.50 ± 0.20)	0.020 ± 0.008 (0.50 ± 0.20)	
0603 (1608)	S	R / W	0.063 ± 0.004 (1.60 ± 0.10)	0.030 ± 0.004 (0.80 ± 0.10)	0.030 ± 0.0028 (0.80 ± 0.07)	0.016 ± 0.006 (0.40 ± 0.15)
	X	R / W	0.063 + 0.006 / - 0.004 (1.60 + 0.15 / - 0.10)	0.030 + 0.006 / - 0.004 (0.80 + 0.15 / - 0.10)	0.030 + 0.006 / - 0.004 (0.80 + 0.15 / - 0.10)	
	X'	R / W	0.063 ± 0.008 (1.60 ± 0.20)	0.030 ± 0.008 (0.80 ± 0.20)	0.030 ± 0.008 (0.80 ± 0.20)	
0805 (2012)	A	R / W	0.080 ± 0.006 (2.00 ± 0.15)	0.050 ± 0.004 (1.25 ± 0.10)	0.024 ± 0.004 (0.60 ± 0.10)	0.020 ± 0.008 (0.50 ± 0.20)
	B	R / W			0.030 ± 0.004 (0.80 ± 0.10)	
	D	R			0.049 ± 0.004 (1.25 ± 0.10)	
	T	R / W	0.080 ± 0.008 (2.00 ± 0.20)	0.050 ± 0.008 (1.25 ± 0.20)	0.033 ± 0.004 (0.85 ± 0.10)	
	I	R			0.049 ± 0.008 (1.25 ± 0.20)	
1206 (3216)	B	R / W	0.126 ± 0.006 (3.20 ± 0.15)	0.063 ± 0.006 (1.60 ± 0.15)	0.030 ± 0.004 (0.80 ± 0.10)	0.024 ± 0.008 (0.60 ± 0.20)
	C	R			0.037 ± 0.004 (0.95 ± 0.10)	
	D	R			0.049 ± 0.004 (1.25 ± 0.10)	
	J	R	0.126 ± 0.008 (3.20 ± 0.20)		0.045 ± 0.006 (1.15 ± 0.15)	
	G	R		0.063 ± 0.008 (1.60 ± 0.20)	0.063 ± 0.008 (1.60 ± 0.20)	
	P	R	0.126 + 0.012 / - 0.004 (3.20 + 0.30 / - 0.10)	0.063 + 0.012 / - 0.004 (1.60 + 0.30 / - 0.10)	0.063 + 0.012 / - 0.004 (1.60 + 0.30 / - 0.10)	
1210 (3225)	C	R	0.126 ± 0.012 (3.20 ± 0.30)	0.098 ± 0.008 (2.50 ± 0.20)	0.037 ± 0.004 (0.95 ± 0.10)	0.030 ± 0.010 (0.75 ± 0.25)
	D	R			0.049 ± 0.004 (1.25 ± 0.10)	
	G	R	0.126 ± 0.016 (3.20 ± 0.40)	0.098 ± 0.012 (2.50 ± 0.30)	0.063 ± 0.008 (1.60 ± 0.20)	
	K	R			0.078 ± 0.008 (2.00 ± 0.20)	
	M	R			0.098 ± 0.012 (2.50 ± 0.30)	

Note

(1) "R" = Reflow soldering process; "W" = Wave soldering process

For technical questions, contact: mlcc@vishay.com
THIS DOCUMENT IS SUBJECT TO CHANGE WITHOUT NOTICE. THE PRODUCTS DESCRIBED HEREIN AND THIS DOCUMENT ARE SUBJECT TO SPECIFIC DISCLAIMERS, SET FORTH AT www.vishay.com/doc?91000

SELECTION CHART

DIELECTRIC		C0G (NP0)																			
STYLE		VJ0402					VJ0603					VJ0805					VJ1206				
SIZE CODE		0402					0603					0805					1206				
VOLTAGE (V_{DC})		10	16	25	50	100	10	16	25	50	100	10	16	25	50	100	10	16	25	50	100
VOLTAGE CODE		Q	J	X	A	B	Q	J	X	A	B	Q	J	X	A	B	Q	J	X	A	B
CAP. CODE	CAP.																				
0R5	0.5 pF	N	N	N	N	N	S	S	S	S	S	A	A	A	A	A					
1R0	1.0 pF	N	N	N	N	N	S	S	S	S	S	A	A	A	A	A					
1R2	1.2 pF	N	N	N	N	N	S	S	S	S	S	A	A	A	A	A					
1R5	1.5 pF	N	N	N	N	N	S	S	S	S	S	A	A	A	A	A	B	B	B	B	B
1R8	1.8 pF	N	N	N	N	N	S	S	S	S	S	A	A	A	A	A	B	B	B	B	B
2R2	2.2 pF	N	N	N	N	N	S	S	S	S	S	A	A	A	A	A	B	B	B	B	B
2R7	2.7 pF	N	N	N	N	N	S	S	S	S	S	A	A	A	A	A	B	B	B	B	B
3R3	3.3 pF	N	N	N	N	N	S	S	S	S	S	A	A	A	A	A	B	B	B	B	B
3R9	3.9 pF	N	N	N	N	N	S	S	S	S	S	A	A	A	A	A	B	B	B	B	B
4R7	4.7 pF	N	N	N	N	N	S	S	S	S	S	A	A	A	A	A	B	B	B	B	B
5R6	5.6 pF	N	N	N	N	N	S	S	S	S	S	A	A	A	A	A	B	B	B	B	B
6R8	6.8 pF	N	N	N	N	N	S	S	S	S	S	A	A	A	A	A	B	B	B	B	B
8R2	8.2 pF	N	N	N	N	N	S	S	S	S	S	A	A	A	A	A	B	B	B	B	B
100	10 pF	N	N	N	N	N	S	S	S	S	S	A	A	A	A	A	B	B	B	B	B
120	12 pF	N	N	N	N	N	S	S	S	S	S	A	A	A	A	A	B	B	B	B	B
150	15 pF	N	N	N	N	N	S	S	S	S	S	A	A	A	A	A	B	B	B	B	B
180	18 pF	N	N	N	N	N	S	S	S	S	S	A	A	A	A	A	B	B	B	B	B
220	22 pF	N	N	N	N	N	S	S	S	S	S	A	A	A	A	A	B	B	B	B	B
270	27 pF	N	N	N	N	N	S	S	S	S	S	A	A	A	A	A	B	B	B	B	B
330	33 pF	N	N	N	N	N	S	S	S	S	S	A	A	A	A	A	B	B	B	B	B
390	39 pF	N	N	N	N	N	S	S	S	S	S	A	A	A	A	A	B	B	B	B	B
470	47 pF	N	N	N	N	N	S	S	S	S	S	A	A	A	A	A	B	B	B	B	B
560	56 pF	N	N	N	N	N	S	S	S	S	S	A	A	A	A	A	B	B	B	B	B
680	68 pF	N	N	N	N	N	S	S	S	S	S	A	A	A	A	A	B	B	B	B	B
820	82 pF	N	N	N	N	N	S	S	S	S	S	A	A	A	A	A	B	B	B	B	B
101	100 pF	N	N	N	N	N	S	S	S	S	S	A	A	A	A	A	B	B	B	B	B
121	120 pF	N	N	N	N	N	S	S	S	S	S	A	A	A	A	A	B	B	B	B	B
151	150 pF	N	N	N	N	N	S	S	S	S	S	A	A	A	A	A	B	B	B	B	B
181	180 pF	N	N	N	N	N	S	S	S	S	S	A	A	A	A	A	B	B	B	B	B
221	220 pF	N	N	N	N	N	S	S	S	S	S	A	A	A	A	A	B	B	B	B	B
271	270 pF	N	N	N	N		S	S	S	S	S	A	A	A	A	A	B	B	B	B	B
331	330 pF	N	N	N	N		S	S	S	S	S	A	A	A	A	A	B	B	B	B	B
391	390 pF	N	N	N	N		S	S	S	S	S	B	B	B	B	B	B	B	B	B	B
471	470 pF	N	N	N	N		S	S	S	S	S	B	B	B	B	B	B	B	B	B	B
561	560 pF	N	N	N	N		S	S	S	S	S	B	B	B	B	B	B	B	B	B	B
681	680 pF	N	N	N	N		S	S	S	S	S	B	B	B	B	B	B	B	B	B	B

Notes

- Letters indicate product thickness, see packaging quantities

(1) Only in 5 % (code “J”) tolerance

(2) Contact mlcc@vishay.com for availability

For technical questions, contact: mlcc@vishay.com
THIS DOCUMENT IS SUBJECT TO CHANGE WITHOUT NOTICE. THE PRODUCTS DESCRIBED HEREIN AND THIS DOCUMENT ARE SUBJECT TO SPECIFIC DISCLAIMERS, SET FORTH AT www.vishay.com/doc?91000

SELECTION CHART

DIELECTRIC		C0G (NP0)																			
STYLE		VJ0402					VJ0603					VJ0805					VJ1206				
SIZE CODE		0402					0603					0805					1206				
VOLTAGE (V_{DC})		10	16	25	50	100	10	16	25	50	100	10	16	25	50	100	10	16	25	50	100
VOLTAGE CODE		Q	J	X	A	B	Q	J	X	A	B	Q	J	X	A	B	Q	J	X	A	B
CAP. CODE	CAP.																				
821	820 pF	N	N	N	N		S	S	S	S	S	B	B	B	B	B	B	B	B	B	B
102	1.0 nF	N	N	N	N		S	S	S	S	S	B	B	B	B	B	B	B	B	B	B
122	1.2 nF						X	X	X	X	X	B	B	B	B	B	B	B	B	B	B
152	1.5 nF						X	X	X	X	X	B	B	B	B	B	B	B	B	B	B
182	1.8 nF						X	X	X	X		B	B	B	B	B	B	B	B	B	B
222	2.2 nF						X	X	X	X		B	B	B	B	B	B	B	B	B	B
272	2.7 nF						X	X	X	X		D	D	D	D	D	B	B	B	B	B
332	3.3 nF						X	X	X	X		D	D	D	D	D	B	B	B	B	B
392	3.9 nF											D	D	D	D	D	B	B	B	B	B
472	4.7 nF											D	D	D	D	D	B	B	B	B	B
562	5.6 nF											D	D	D	D		B	B	B	B	B
682	6.8 nF											D	D	D	D		C	C	C	C	C
822	8.2 nF											D	D	D	D		D	D	D	D	D
103	10 nF											D	D	D	D		D	D	D	D	D
123	12 nF											T (1)	T (1)	T (1)	T (1)		P	P	P (1)	P (1)	
153	15 nF													T (1)	T (1)		P	P	P (1)	P (1)	
183	18 nF													T (1)	T (1)		P	P	P (1)	P (1)	
223	22 nF																P	P	P (1)	P (1)	
273	27 nF																P	P	P (1)	P (1)	
333	33 nF																P	P	P (1)	P (1)	
393	39 nF																P	P	P (1)	P (1)	
473	47 nF																				
563	56 nF																				
683	68 nF																				
823	82 nF																				
104	100 nF																				

Notes

- Letters indicate product thickness, see packaging quantities

(1) Only in 5 % (code “J”) tolerance

(2) Contact mlcc@vishay.com for availability

For technical questions, contact: mlcc@vishay.com
THIS DOCUMENT IS SUBJECT TO CHANGE WITHOUT NOTICE. THE PRODUCTS DESCRIBED HEREIN AND THIS DOCUMENT ARE SUBJECT TO SPECIFIC DISCLAIMERS, SET FORTH AT www.vishay.com/doc?91000

SELECTION CHART

DIELECTRIC		X5R														
STYLE		VJ0402					VJ0603					VJ0805				
SIZE CODE		0402					0603					0805				
VOLTAGE (V_{DC})		6.3 V	10 V	16 V	25 V	50 V	6.3 V	10 V	16 V	25 V	50 V	6.3 V	10 V	16 V	25 V	50 V
VOLTAGE CODE		Y	Q	J	X	A	Y	Q	J	X	A	Y	Q	J	X	A
CAP. CODE	CAP.															
473	47 nF			N												
563	56 nF		N													
683	68 nF		N	N								N				
823	82 nF	N	N	N												
104	100 nF	N	N	N	N	N										
124	120 nF															
154	150 nF		N		N											
184	180 nF															
224	220 nF	N	N	N	N	N			X	X						
274	270 nF							X	X							
334	330 nF	N	N					X	X	X						
394	390 nF							X	X							
474	470 nF	N	N	E	E	E (2)(3)		X	X	X	X (2)					
564	560 nF															
684	680 nF	N	N					X	X	X						
824	820 nF						X	X	X							
105	1.0 µF	N	N	N	N		X	X	X	X	X					
155	1.5 µF						X					I	I	I	I	
225	2.2 µF	N	N (3)	E (3)	E (3)		X	X	X'	X'	X' (2)(3)	I	I	I	I	I (3)
335	3.3 µF											I	I	I	I	
475	4.7 µF	E (1)	E (1)(3)	E (1)(3)			X	X	X'	X' (2)(3)		I	I	I	I	I (3)
106	10 µF	E (1)(3)	E (1)(3)				X'	X' (1)	X' (3)	X' (1)(3)		I	I	I	I	I (3)
226	22 µF						X' (1)	X' (1)(3)				I (3)	I (1)(3)	I (1)(3)	I (1)(3)	
476	47 µF											I (1)(3)	I (1)(3)			
686	68 µF															
107	100 µF															

Notes

- Letters indicate product thickness, see packaging quantities

(1) Not in 10 % (code "K") tolerance
(2) Not in 20 % (code "M") tolerance
(3) Contact mlcc@vishay.com for availability

SELECTION CHART

DIELECTRIC		X5R										
STYLE		VJ1206					VJ1210					
SIZE CODE		1206					1210					
VOLTAGE (V_{DC})		6.3 V	10 V	16 V	25 V	50 V	4 V	6.3 V	10 V	16 V	25 V	50 V
VOLTAGE CODE		Y	Q	J	X	A	S	Y	Q	J	X	A
CAP. CODE	CAP.											
105	1.0 µF											
155	1.5 µF		J	J					K	K		
225	2.2 µF		J	J	P	P (2)			K	K		
335	3.3 µF		P	P	P							
475	4.7 µF	P	P	P	P	P			K	K	K	
685	6.8 µF	P	P									
106	10 µF	P	P	P	P	P			K	K	K	M
226	22 µF	P	P	P (3)	P (2)(3)			M	M	M	M	
476	47 µF	P (3)	P (3)					M	M	M (3)		
107	100 µF	P (1)(3)						M (1)	M (1)(3)			
227	220 µF						M (1)(3)					

Notes

- Letters indicate product thickness, see packaging quantities

(1) Not in 10 % (code "K") tolerance
(2) Not in 20 % (code "M") tolerance
(3) Contact mlcc@vishay.com for availability

For technical questions, contact: mlcc@vishay.com
THIS DOCUMENT IS SUBJECT TO CHANGE WITHOUT NOTICE. THE PRODUCTS DESCRIBED HEREIN AND THIS DOCUMENT ARE SUBJECT TO SPECIFIC DISCLAIMERS, SET FORTH AT www.vishay.com/doc?91000

SELECTION CHART

DIELECTRIC		X7R															
STYLE		VJ0402						VJ0603					VJ0805				
SIZE CODE		0402						0603					0805				
VOLTAGE (V_{DC})		6.3 V	10 V	16 V	25 V	50 V	100 V	10 V	16 V	25 V	50 V	100 V	10 V	16 V	25 V	50 V	100 V
VOLTAGE CODE		Y	Q	J	X	A	B	Q	J	X	A	B	Q	J	X	A	B
CAP. CODE	CAP.																
101	100 pF		N	N	N	N		S (1)	S (1)	S (1)	S (1)	S (1)	B (1)	B (1)	B (1)	B (1)	B (1)
121	120 pF		N	N	N	N		S (1)	S (1)	S (1)	S (1)	S (1)	B (1)	B (1)	B (1)	B (1)	B (1)
151	150 pF		N	N	N	N		S (1)	S (1)	S (1)	S (1)	S (1)	B (1)	B (1)	B (1)	B (1)	B (1)
181	180 pF		N	N	N	N		S (1)	S (1)	S (1)	S (1)	S (1)	B (1)	B (1)	B (1)	B (1)	B (1)
221	220 pF		N	N	N	N		S (1)	S (1)	S (1)	S (1)	S (1)	B (1)	B (1)	B (1)	B (1)	B (1)
271	270 pF		N	N	N	N		S (1)	S (1)	S (1)	S (1)	S (1)	B (1)	B (1)	B (1)	B (1)	B (1)
331	330 pF		N	N	N	N		S (1)	S (1)	S (1)	S (1)	S (1)	B (1)	B (1)	B (1)	B (1)	B (1)
391	390 pF		N	N	N	N		S (1)	S (1)	S (1)	S (1)	S (1)	B (1)	B (1)	B (1)	B (1)	B (1)
471	470 pF		N	N	N	N		S	S	S	S	S	B	B	B	B	B
561	560 pF		N	N	N	N		S	S	S	S	S	B	B	B	B	B
681	680 pF		N	N	N	N		S	S	S	S	S	B	B	B	B	B
821	820 pF		N	N	N	N		S	S	S	S	S	B	B	B	B	B
102	1.0 nF		N	N	N	N		S	S	S	S	S	B	B	B	B	B
122	1.2 nF		N	N	N	N		S	S	S	S	S	B	B	B	B	B
152	1.5 nF		N	N	N	N		S	S	S	S	S	B	B	B	B	B
182	1.8 nF		N	N	N	N		S	S	S	S	S	B	B	B	B	B
222	2.2 nF		N	N	N	N		S	S	S	S	S	B	B	B	B	B
272	2.7 nF		N	N	N	N		S	S	S	S	S	B	B	B	B	B
332	3.3 nF		N	N	N	N		S	S	S	S	S	B	B	B	B	B
392	3.9 nF		N	N	N	N		S	S	S	S	S	B	B	B	B	B
472	4.7 nF		N	N	N	N		S	S	S	S	S	B	B	B	B	B
562	5.6 nF		N	N	N	N		S	S	S	S	S	B	B	B	B	B
682	6.8 nF		N	N	N	N		S	S	S	S	S	B	B	B	B	B
822	8.2 nF		N	N	N	N		S	S	S	S	S	B	B	B	B	B
103	10 nF		N	N	N	N		S	S	S	S	S	B	B	B	B	B
123	12 nF		N	N	N			S	S	S	S		B	B	B	B	B
153	15 nF		N	N	N			S	S	S	S		B	B	B	B	B
183	18 nF		N	N	N			S	S	S	S		B	B	B	B	B
223	22 nF		N	N	N	N (2)		S	S	S	S	X (2)	B	B	B	B	B
273	27 nF		N	N	N			S	S	S	S		B	B	B	B	D
333	33 nF		N	N	N	N (1)		S	S	S	X		B	B	B	B	D
393	39 nF		N	N	N			S	S	S	X		B	B	B	B	D
473	47 nF		N	N	N	N (2)		S	S	S	X	X (2)	B	B	B	B	D
563	56 nF		N	N				S	S	S	X		B	B	B	B	D
683	68 nF		N	N				S	S	S	X		B	B	B	B	D
823	82 nF		N	N				S	S	S	X		B	B	B	B	D
104	100 nF		N	N	N	E (2)		S	S	S	X	X (2)	B	B	B	B / D	D
124	120 nF							S	S	X			B	B	B	D	
154	150 nF							S	S	X			D	D	D	D	
184	180 nF							S	S	X			D	D	D	D	
224	220 nF				N (2)(4)			S	S	X	X (2)		D	D	D	D	I (2)
274	270 nF							X	X	X			D	D	D		
334	330 nF							X	X	X			D	D	D	I	
394	390 nF							X	X	X			D	D	D		
474	470 nF		N (2)					X	X	X	X (2)		D	D	D	I	I (2)
564	560 nF							X	X				D	D	D		
684	680 nF							X	X				D	D	D		
824	820 nF							X	X				D	D	D		
105	1.0 µF	N (1)						X	X	X (1)	X (2)(4)		D	D	D	I (1)	
155	1.5 µF												I	I (1)	I (1)		
225	2.2 µF							X (1)	X' (1)				I	I	I	I (2)(4)	
335	3.3 µF																
475	4.7 µF												I (1)	I (1)	I (1)		
685	6.8 µF																
106	10 µF												I (1)	I (3)(4)			
156	15 µF																
226	22 µF																
336	33 µF																
476	47 µF																
686	68 µF																

Notes

- Letters indicate product thickness, see packaging quantities

(1) Not in 5 % (code "J") tolerance
(2) Only in 10 % (code "K") tolerance
(3) Only in 20 % (code "M") tolerance
(4) Contact mlcc@vishay.com for availability

For technical questions, contact: mlcc@vishay.com
THIS DOCUMENT IS SUBJECT TO CHANGE WITHOUT NOTICE. THE PRODUCTS DESCRIBED HEREIN AND THIS DOCUMENT ARE SUBJECT TO SPECIFIC DISCLAIMERS, SET FORTH AT www.vishay.com/doc?91000

SELECTION CHART

DIELECTRIC		X7R										
STYLE		VJ1206					VJ1210					
SIZE CODE		1206					1210					
VOLTAGE (V_{DC})		10 V	16 V	25 V	50 V	100 V	6.3 V	10 V	16 V	25 V	50 V	100 V
VOLTAGE CODE		Q	J	X	A	B	Y	Q	J	X	A	B
CAP. CODE	CAP.											
101	100 pF											
121	120 pF											
151	150 pF	B (1)	B (1)	B (1)	B (1)	B (1)						
181	180 pF	B (1)	B (1)	B (1)	B (1)	B (1)						
221	220 pF	B (1)	B (1)	B (1)	B (1)	B (1)						
271	270 pF	B (1)	B (1)	B (1)	B (1)	B (1)						
331	330 pF	B (1)	B (1)	B (1)	B (1)	B (1)						
391	390 pF	B (1)	B (1)	B (1)	B (1)	B (1)						
471	470 pF	B	B	B	B	B						
561	560 pF	B	B	B	B	B						
681	680 pF	B	B	B	B	B						
821	820 pF	B	B	B	B	B						
102	1.0 nF	B	B	B	B	B		C	C	C	C	C
122	1.2 nF	B	B	B	B	B		C	C	C	C	C
152	1.5 nF	B	B	B	B	B		C	C	C	C	C
182	1.8 nF	B	B	B	B	B		C	C	C	C	C
222	2.2 nF	B	B	B	B	B		C	C	C	C	C
272	2.7 nF	B	B	B	B	B		C	C	C	C	C
332	3.3 nF	B	B	B	B	B		C	C	C	C	C
392	3.9 nF	B	B	B	B	B		C	C	C	C	C
472	4.7 nF	B	B	B	B	B		C	C	C	C	C
562	5.6 nF	B	B	B	B	B		C	C	C	C	C
682	6.8 nF	B	B	B	B	B		C	C	C	C	C
822	8.2 nF	B	B	B	B	B		C	C	C	C	C
103	10 nF	B	B	B	B	B		C	C	C	C	C
123	12 nF	B	B	B	B	B		C	C	C	C	C
153	15 nF	B	B	B	B	B		C	C	C	C	C
183	18 nF	B	B	B	B	B		C	C	C	C	C
223	22 nF	B	B	B	B	B		C	C	C	C	C
273	27 nF	B	B	B	B	B		C	C	C	C	C
333	33 nF	B	B	B	B	B		C	C	C	C	C
393	39 nF	B	B	B	B	B		C	C	C	C	C
473	47 nF	B	B	B	B	B		C	C	C	C	C
563	56 nF	B	B	B	B	B		C	C	C	C	C
683	68 nF	B	B	B	B	B		C	C	C	C	C
823	82 nF	B	B	B	B	D		C	C	C	C	C
104	100 nF	B	B	B	B	D		C	C	C	C	C
124	120 nF	B	B	B	B	D		C	C	C	C	C
154	150 nF	C	C	C	C	G		C	C	C	C	D
184	180 nF	C	C	C	C	G		C	C	C	C	D
224	220 nF	C	C	C	C	G		C	C	C	C	D
274	270 nF	C	C	C	D	G		C	C	C	C	G
334	330 nF	C	C	C	D	G		C	C	C	D	G
394	390 nF	C	C	J	P	G		C	C	C	D	M
474	470 nF	J	J	J	P	G		C	C	C	D	M
564	560 nF	J	J	J	P	P		D	D	D	D	M
684	680 nF	J	J	J	P	P		D	D	D	D	K
824	820 nF	J	J	J	P	P		D	D	D	D	K
105	1.0 µF	J	J	J	P	P		D	D	D	D	K
155	1.5 µF	J	J	P								M
225	2.2 µF	J	J	P	P (1)	P (1)			K	G	M (1)	M
335	3.3 µF	P	P	P					K (2)	G (1)		
475	4.7 µF	P	P	P	P (1)			K	K	K (1)	M (1)	
685	6.8 µF											
106	10 µF	P	P (1)	P (1)				K	K	K (1)	M (1)	
156	15 µF											
226	22 µF	P (1)(4)	P (3)(4)					M (2)(4)	M (1)(4)	M (1)(4)		
336	33 µF											
476	47 µF						M (2)(4)	M (1)(4)				
686	68 µF											
107	100 µF											

Notes

- Letters indicate product thickness, see packaging quantities

(1) Not in 5 % (code “J”) tolerance
(2) Only in 10 % (code “K”) tolerance
(3) Only in 20 % (code “M”) tolerance
(4) Contact mlcc@vishay.com for availability

For technical questions, contact: mlcc@vishay.com
THIS DOCUMENT IS SUBJECT TO CHANGE WITHOUT NOTICE. THE PRODUCTS DESCRIBED HEREIN AND THIS DOCUMENT ARE SUBJECT TO SPECIFIC DISCLAIMERS, SET FORTH AT www.vishay.com/doc?91000

PACKAGING QUANTITIES						
SIZE CODE (inch / mm)	MAX. THICKNESS (mm)	THICKNESS SYMBOL	PAPER TAPE		PLASTIC TAPE	
			7" REEL (C)	13" REEL (P)	7" REEL (T)	13" REEL (R)
0402 (1002)	0.55	N	10K	50K		
	0.70	E	10K			
0603 (1608)	0.87	S	4K	15K		
	0.95	X	4K	15K		
	1.00	X'	4K	15K		
0805 (2012)	0.75	A	4K	15K		
	0.95	B, T	4K	15K		
	1.40	D			3K	10K
	1.45	I			3K	10K
1206 (3216)	0.95	B	4K	15K		
	1.05	C			3K	10K
	1.30	J			3K	10K
	1.35	D			3K	10K
	1.80	G			2K	
	1.90	P			2K	
1210 (3225)	1.05	C			3K	10K
	1.35	D			3K	10K
	1.80	G			2K	
	2.20	K			1K	
	2.80	M			1K	

For technical questions, contact: mlcc@vishay.com
THIS DOCUMENT IS SUBJECT TO CHANGE WITHOUT NOTICE. THE PRODUCTS DESCRIBED HEREIN AND THIS DOCUMENT ARE SUBJECT TO SPECIFIC DISCLAIMERS, SET FORTH AT www.vishay.com/doc?91000

TAPE AND REEL SPECIFICATION

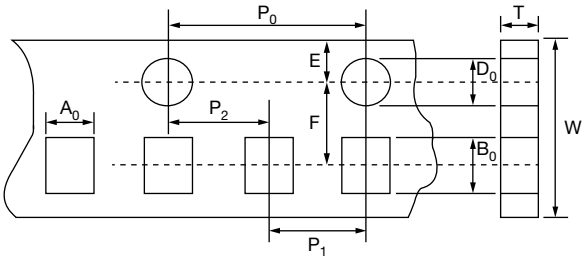

Dimensions of paper tape

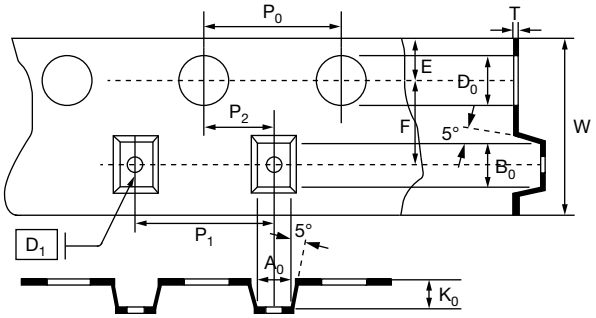

Dimensions of plastic tape

DIMENSIONS PAPER TAPE in millimeters						
SIZE CODE	**0402**		**0603**	**0805**		**1206**
THICKNESS	**N**	**E**	**S, X, X'**	**A**	**B, T**	**B**
A_0	0.62 ± 0.05	0.70 ± 0.10	1.02 ± 0.05	1.50 ± 0.10	1.50 ± 0.10	2.00 ± 0.10
B_0	1.12 ± 0.05	1.20 ± 0.10	1.80 ± 0.05	2.30 ± 0.10	2.30 ± 0.10	3.50 ± 0.10
T	0.60 ± 0.05	0.70 ± 0.10	0.95 ± 0.05	0.75 ± 0.05	0.95 ± 0.05	0.95 ± 0.05
K_0	-	-	-	-	-	-
W	8.00 ± 0.10	8.00 ± 0.10	8.00 ± 0.10	8.00 ± 0.10	8.00 ± 0.10	8.00 ± 0.10
P_0	4.00 ± 0.10	4.00 ± 0.10	4.00 ± 0.10	4.00 ± 0.10	4.00 ± 0.10	4.00 ± 0.10
10 x P_0	40.0 ± 0.10	40.0 ± 0.10	40.0 ± 0.10	40.0 ± 0.10	40.0 ± 0.10	40.0 ± 0.10
P_1	2.00 ± 0.05	2.00 ± 0.05	4.00 ± 0.10	4.00 ± 0.10	4.00 ± 0.10	4.00 ± 0.10
P_2	2.00 ± 0.05	2.00 ± 0.05	2.00 ± 0.05	2.00 ± 0.05	2.00 ± 0.05	2.00 ± 0.05
D_0	1.55 ± 0.05	1.55 ± 0.05	1.55 ± 0.05	1.55 ± 0.05	1.55 ± 0.05	1.50 ± 0.05
D_1	-	-	-	-	-	-
E	1.75 ± 0.05	1.75 ± 0.05	1.75 ± 0.05	1.75 ± 0.05	1.75 ± 0.05	1.75 ± 0.10
F	3.50 ± 0.05	3.50 ± 0.05	3.50 ± 0.05	3.50 ± 0.05	3.50 ± 0.05	3.50 ± 0.05

DIMENSIONS PLASTIC TAPE in millimeters						
SIZE CODE	**0805**	**1206**		**1210**		
THICKNESS	**D, I**	**C, J, D**	**G, P**	**C, D**	**G, K**	**M**
A_0	< 1.57	< 1.85	< 1.95	< 2.97	< 2.97	< 2.97
B_0	< 2.40	< 3.46	< 3.67	< 3.73	< 3.73	< 3.73
T	0.23 ± 0.05	0.23 ± 0.05	0.23 ± 0.05	0.23 ± 0.05	0.23 ± 0.05	0.23 ± 0.05
K_0	< 2.50	< 2.50	< 2.50	< 2.50	< 2.50	< 3.00
W	8.00 ± 0.10	8.00 ± 0.10	8.00 ± 0.10	8.00 ± 0.10	8.00 ± 0.10	8.00 ± 0.10
P_0	4.00 ± 0.10	4.00 ± 0.10	4.00 ± 0.10	4.00 ± 0.10	4.00 ± 0.10	4.00 ± 0.10
10 x P_0	40.0 ± 0.10	40.0 ± 0.10	40.0 ± 0.10	40.0 ± 0.10	40.0 ± 0.10	40.0 ± 0.10
P_1	4.00 ± 0.10	4.00 ± 0.10	4.00 ± 0.10	4.00 ± 0.10	4.00 ± 0.10	4.00 ± 0.10
P_2	2.00 ± 0.05	2.00 ± 0.05	2.00 ± 0.05	2.00 ± 0.05	2.00 ± 0.05	2.00 ± 0.05
D_0	1.50 ± 0.05	1.50 ± 0.05	1.50 ± 0.05	1.50 ± 0.05	1.50 ± 0.05	1.50 ± 0.05
D_1	1.00 ± 0.10	1.00 ± 0.10	1.00 ± 0.10	1.00 ± 0.10	1.00 ± 0.10	1.00 ± 0.10
E	1.75 ± 0.10	1.75 ± 0.10	1.75 ± 0.10	1.75 ± 0.10	1.75 ± 0.10	1.75 ± 0.10
F	3.50 ± 0.05	3.50 ± 0.05	3.50 ± 0.05	3.50 ± 0.05	3.50 ± 0.05	3.50 ± 0.05

For technical questions, contact: mlcc@vishay.com
THIS DOCUMENT IS SUBJECT TO CHANGE WITHOUT NOTICE. THE PRODUCTS DESCRIBED HEREIN AND THIS DOCUMENT ARE SUBJECT TO SPECIFIC DISCLAIMERS, SET FORTH AT www.vishay.com/doc?91000

REEL SPECIFICATION

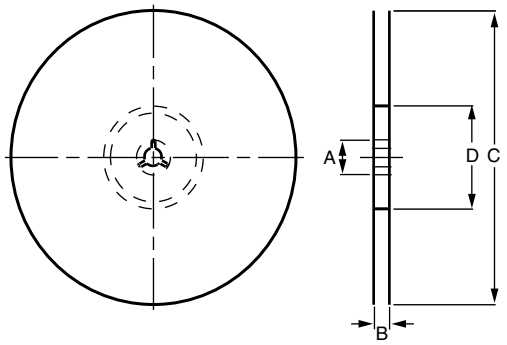

REEL DIMENSIONS in millimeters		
SYMBOL	7" REEL	13" REEL
A	13.0 ± 0.5	13.0 ± 0.5
B	9.0 ± 1.0	9.0 ± 1.0
C	178.0 ± 1.0	330.0 ± 1.0
D	60.0 ± 1.0	100.0 ± 1.0

CONSTRUCTION

NO.	NAME		C0G (NP0)	X5R / X7R
1	Ceramic material		$CaZrO_3$ based	$BaTiO_3$ based
2	Inner electrode		Ni	
3	Termination	Inner layer	Cu	
4		Middle layer	Ni	
5		Outer layer	Sn (matt)	

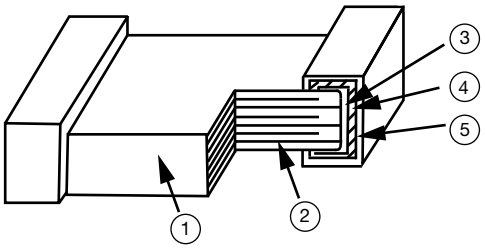

STORAGE AND HANDLING CONDITIONS

(1) To store products at 5 °C to 40 °C ambient temperature and 20 % to 70 % relative humidity conditions.
(2) The product is recommended to be used within one year after shipment. Check solderability in case of shelf life extension is needed.

Cautions:

a. The corrosive gas reacts on the terminal electrodes of capacitors, and results in the poor solderability.
Do not store the capacitors in the ambience of corrosive gas (e.g., hydrogen sulfide, sulfur dioxide, chlorine, ammonia gas etc.)

b. In corrosive atmosphere, solderability might be degraded, and silver migration might occur to cause low reliability.

c. Due to the dewing by rapid humidity change, or the photochemical change of the terminal electrode by direct sunlight, the solderability and electrical performance may deteriorate. Do not store capacitors under direct sunlight or dewing condition. To store products on the shelf and avoid exposure to moisture.

For technical questions, contact: mlcc@vishay.com
THIS DOCUMENT IS SUBJECT TO CHANGE WITHOUT NOTICE. THE PRODUCTS DESCRIBED HEREIN AND THIS DOCUMENT ARE SUBJECT TO SPECIFIC DISCLAIMERS, SET FORTH AT www.vishay.com/doc?91000

Disclaimer

ALL PRODUCT, PRODUCT SPECIFICATIONS AND DATA ARE SUBJECT TO CHANGE WITHOUT NOTICE TO IMPROVE RELIABILITY, FUNCTION OR DESIGN OR OTHERWISE.

Vishay Intertechnology, Inc., its affiliates, agents, and employees, and all persons acting on its or their behalf (collectively, “Vishay”), disclaim any and all liability for any errors, inaccuracies or incompleteness contained in any datasheet or in any other disclosure relating to any product.

Vishay makes no warranty, representation or guarantee regarding the suitability of the products for any particular purpose or the continuing production of any product. To the maximum extent permitted by applicable law, Vishay disclaims (i) any and all liability arising out of the application or use of any product, (ii) any and all liability, including without limitation special, consequential or incidental damages, and (iii) any and all implied warranties, including warranties of fitness for particular purpose, non-infringement and merchantability.

Statements regarding the suitability of products for certain types of applications are based on Vishay's knowledge of typical requirements that are often placed on Vishay products in generic applications. Such statements are not binding statements about the suitability of products for a particular application. It is the customer's responsibility to validate that a particular product with the properties described in the product specification is suitable for use in a particular application. Parameters provided in datasheets and / or specifications may vary in different applications and performance may vary over time. All operating parameters, including typical parameters, must be validated for each customer application by the customer's technical experts. Product specifications do not expand or otherwise modify Vishay's terms and conditions of purchase, including but not limited to the warranty expressed therein.

Hyperlinks included in this datasheet may direct users to third-party websites. These links are provided as a convenience and for informational purposes only. Inclusion of these hyperlinks does not constitute an endorsement or an approval by Vishay of any of the products, services or opinions of the corporation, organization or individual associated with the third-party website. Vishay disclaims any and all liability and bears no responsibility for the accuracy, legality or content of the third-party website or for that of subsequent links.

Except as expressly indicated in writing, Vishay products are not designed for use in medical, life-saving, or life-sustaining applications or for any other application in which the failure of the Vishay product could result in personal injury or death. Customers using or selling Vishay products not expressly indicated for use in such applications do so at their own risk. Please contact authorized Vishay personnel to obtain written terms and conditions regarding products designed for such applications.

No license, express or implied, by estoppel or otherwise, to any intellectual property rights is granted by this document or by any conduct of Vishay. Product names and markings noted herein may be trademarks of their respective owners.

© 2024 VISHAY INTERTECHNOLOGY, INC. ALL RIGHTS RESERVED