SMD 0805, Glass Protected NTC Thermistors

LINKS TO ADDITIONAL RESOURCES

3D Models Design Tools

QUICK REFERENCE DATA		
PARAMETER	VALUE	UNIT
Resistance value at 25 °C	1K to 680K	Ω
Tolerance on R_{25}-value	± 1; ± 2; ± 3; ± 5	%
$B_{25/85}$-value	3370 to 4125	K
Tolerance on $B_{25/85}$-value	± 1; ± 3	%
Maximum power dissipation at 25 °C P_{max25}	210	mW
Thermal time constant τ	≈ 10	s
Dissipation factor D	3.5	mW/K
Operating temperature range at zero power [1]	-55 to +150	°C
Storage temperature range	-55 to +150	°C
Weight	≈ 0.008	g

Note

[1] Zero power is considered as measuring power maximum 1 % of P_{max25}

AGENCY APPROVALS

Agency approval documents, please see:
www.vishay.com/ppg?29044&documents

DESIGN-IN SUPPORT

For complete curve computation, please visit:
www.vishay.com/thermistors/ntc-rt-calculator/

FEATURES

- TCR ranging from -6 %/K at -40 °C to -2 %/K at 150 °C
- Tolerance on R_{25} down to 1 %, and on $B_{25/85}$ down to 1 %
- Suitable for wave or reflow soldering
- NiSn terminations
- Fully glass coated and protected
- cULus recognized, file E148885 (UL category XGPU2 / XGPU8)
- AEC-Q200 qualified
- Material categorization: for definitions of compliance please see www.vishay.com/doc?99912

AUTOMOTIVE GRADE
Pb-free
e3
RoHS COMPLIANT
HALOGEN FREE

APPLICATIONS

- Temperature sensing, protection and compensation in automotive, industrial, telecom and consumer applications. Examples are:
  - Battery chargers
  - Power supplies
  - Office equipment
  - LCD compensation
  - In-car entertainment

DESCRIPTION

Size 0805 (M2012) glass protected SMD chip thermistor with negative temperature coefficient (TCR) and matte tin (Sn) plated terminations. The device has no marking.

PACKAGING

Available in 8 mm punched paper tape on reel package of 4000 units.

CAUTIONS AND WARNINGS ON MOUNTING AND HANDLING

Please read the special instructions:
see www.vishay.com/doc?29224.

ELECTRICAL DATA AND ORDERING INFORMATION

R_{25} (Ω)	R_{25}-TOL. (± %)	$B_{25/85}$ (K)	$B_{25/85}$-TOL. (± %)	UL RECOG.	SAP MATERIAL AND ORDERING NUMBER [1]
1000	3, 5	3370	1		NTCS0805E3102*LT
1500	3, 5	3420	1		NTCS0805E3152*LT
2200	1, 2, 3, 5	3600	1	✓	NTCS0805E3222*MT
4700	1, 2, 3, 5	3500	1		NTCS0805E3472*MT
5000	1, 2, 3, 5	3480	1		NTCS0805E3502*LT
10 000	1, 2, 3, 5	3430	3	✓	NTCS0805E3103*LT
10 000	1, 2, 3, 5	3570	3	✓	NTCS0805E3103*MT
10 000	1, 2, 3, 5	3940	1	✓	NTCS0805E3103*HT
15 000	1, 2, 3, 5	3700	1	✓	NTCS0805E3153*MT
22 000	1, 2, 3, 5	3800	1	✓	NTCS0805E3223*HT
33 000	1, 2, 3, 5	3920	1	✓	NTCS0805E3333*HT
47 000	1, 2, 3, 5	3960	1	✓	NTCS0805E3473*HT
68 000	1, 2, 3, 5	4100	1	✓	NTCS0805E3683*XT
100 000	1, 2, 3, 5	3590	1	✓	NTCS0805E3104*MT
100 000	1, 2, 3, 5	4100	1	✓	NTCS0805E3104*XT
330 000	1, 2, 3, 5	3930	1	✓	NTCS0805E3334*HT
470 000	1, 2, 3, 5	4025	1	✓	NTCS0805E3474*XT
680 000	1, 2, 3, 5	4125	1	✓	NTCS0805E3684*XT

Note

[1] Replace * in SAP material number by J for ± 5 %, H for ± 3 %, G for ± 2 %, F for ± 1 % tolerance on R_{25}

For technical questions, contact: nlr@vishay.com
THIS DOCUMENT IS SUBJECT TO CHANGE WITHOUT NOTICE. THE PRODUCTS DESCRIBED HEREIN AND THIS DOCUMENT ARE SUBJECT TO SPECIFIC DISCLAIMERS, SET FORTH AT www.vishay.com/doc?91000

DIMENSIONS

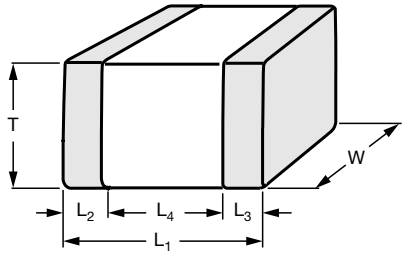

L_1	W	T	L_2 AND L_3 MIN.	L_4 MIN.
2.0 ± 0.2	1.25 ± 0.15	0.8 ± 0.15	0.2	0.55

SOLDERING CONDITIONS

Soldering, handling, and mounting conditions are detailed in the instructions document: see www.vishay.com/doc?29224.

Typical examples of a soldering processes that will provide reliable joints without damage, are shown below.

Reflow Soldering

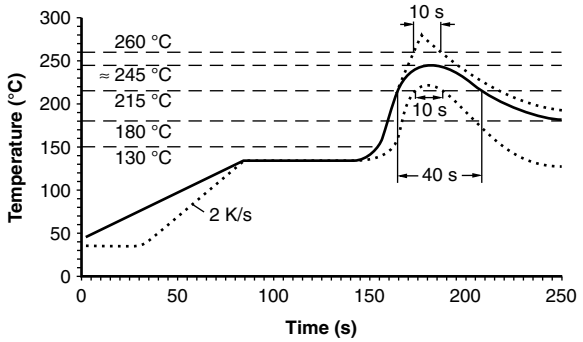

Lead (Pb)-free Reflow Soldering Profile

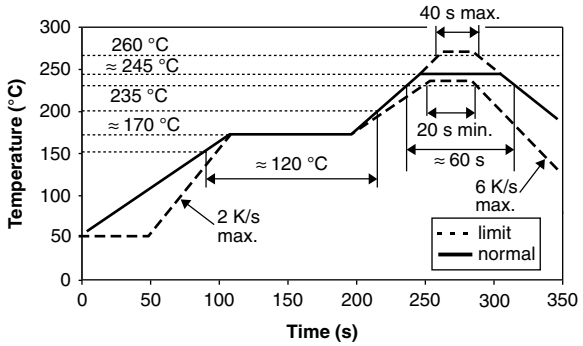

Dimensions of the solder lands

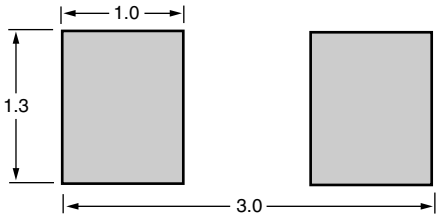

PACKAGING

TAPE SPECIFICATIONS

All tape specifications are in accordance with IEC 60286-3. Basic dimensions are given below. Carrier tape material is paper.

PAPER TAPE

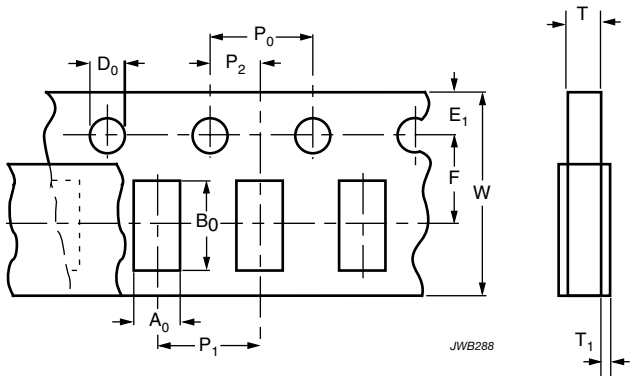

DIMENSIONS OF PAPER TAPE in millimeters	
PARAMETER	**DIMENSION**
A_0 (1)	1.7 ± 0.2
B_0 (1)	2.35 ± 0.1
W	8.0 ± 0.2
E_1	1.75 ± 0.1
F	3.5 ± 0.05
D_0	1.55 ± 0.05
P_0 (2)	4.0 ± 0.1
P_1	4.0 ± 0.1
P_2	2.0 ± 0.05
T tape thickness max.	1.1
T_1 cover tape thickness max.	0.1

Notes

(1) Measured 0.3 mm above base pocket

(2) P_0 pitch cumulative error over any 10 pitches ± 1.0 mm

For technical questions, contact: nlr@vishay.com
THIS DOCUMENT IS SUBJECT TO CHANGE WITHOUT NOTICE. THE PRODUCTS DESCRIBED HEREIN AND THIS DOCUMENT ARE SUBJECT TO SPECIFIC DISCLAIMERS, SET FORTH AT www.vishay.com/doc?91000

Disclaimer

ALL PRODUCT, PRODUCT SPECIFICATIONS AND DATA ARE SUBJECT TO CHANGE WITHOUT NOTICE TO IMPROVE RELIABILITY, FUNCTION OR DESIGN OR OTHERWISE.

Vishay Intertechnology, Inc., its affiliates, agents, and employees, and all persons acting on its or their behalf (collectively, “Vishay”), disclaim any and all liability for any errors, inaccuracies or incompleteness contained in any datasheet or in any other disclosure relating to any product.

Vishay makes no warranty, representation or guarantee regarding the suitability of the products for any particular purpose or the continuing production of any product. To the maximum extent permitted by applicable law, Vishay disclaims (i) any and all liability arising out of the application or use of any product, (ii) any and all liability, including without limitation special, consequential or incidental damages, and (iii) any and all implied warranties, including warranties of fitness for particular purpose, non-infringement and merchantability.

Statements regarding the suitability of products for certain types of applications are based on Vishay's knowledge of typical requirements that are often placed on Vishay products in generic applications. Such statements are not binding statements about the suitability of products for a particular application. It is the customer's responsibility to validate that a particular product with the properties described in the product specification is suitable for use in a particular application. Parameters provided in datasheets and / or specifications may vary in different applications and performance may vary over time. All operating parameters, including typical parameters, must be validated for each customer application by the customer's technical experts. Product specifications do not expand or otherwise modify Vishay's terms and conditions of purchase, including but not limited to the warranty expressed therein.

Hyperlinks included in this datasheet may direct users to third-party websites. These links are provided as a convenience and for informational purposes only. Inclusion of these hyperlinks does not constitute an endorsement or an approval by Vishay of any of the products, services or opinions of the corporation, organization or individual associated with the third-party website. Vishay disclaims any and all liability and bears no responsibility for the accuracy, legality or content of the third-party website or for that of subsequent links.

Except as expressly indicated in writing, Vishay products are not designed for use in medical, life-saving, or life-sustaining applications or for any other application in which the failure of the Vishay product could result in personal injury or death. Customers using or selling Vishay products not expressly indicated for use in such applications do so at their own risk. Please contact authorized Vishay personnel to obtain written terms and conditions regarding products designed for such applications.

No license, express or implied, by estoppel or otherwise, to any intellectual property rights is granted by this document or by any conduct of Vishay. Product names and markings noted herein may be trademarks of their respective owners.

© 2024 VISHAY INTERTECHNOLOGY, INC. ALL RIGHTS RESERVED