NTC Thermistors, Radial Leaded, Standard Precision

FEATURES

- Accuracy over a wide temperature range
- High stability over a long life
- Excellent price/performance ratio
- cULus recognized, file E148885 (category XGPU2/XGPU8)
- Mounting: radial
- Material categorization: for definitions of compliance please see www.vishay.com/doc?99912

Pb-free Available

RoHS COMPLIANT

APPLICATIONS

- Temperature measurement, compensation, sensing and control in consumer and industrial applications

LINKS TO ADDITIONAL RESOURCES

3D Models | Design Tools | SPICE Models | Related Documents

QUICK REFERENCE DATA

PARAMETER	VALUE	UNIT
Resistance value at 25 °C	3.3 to 470K	Ω
Tolerance on R_{25}-value	± 2; ± 3; ± 5	%
$B_{25/85}$-value	2880 to 4570	K
Tolerance on $B_{25/85}$-value	± 0.5 to ± 3	%
Operating temperature range: At zero power dissipation; continuously At zero power dissipation; for short periods	 -40 to +125 ≤ 150	°C
Response time (in oil)	≈ 1.2	s
Thermal time constant τ (for information only)	15	s
Dissipation factor δ (for information only)	7 8.5 (for R_{25}-value ≤ 680 Ω)	mW/K
Maximum power dissipation at 55 °C	500	mW
Climatic category (LCT / UCT / days)	40 / 125 / 56	-
Weight	≈ 0.3	g

DESCRIPTION

These thermistors have a negative temperature coefficient. The part consists of a NTC chip, soldered between two tin plated copper wires. It has a gray base coating with a blue colored dot. The coating has no specified insulation properties.

PACKAGING

The thermistors are packed in bulk or tape on reel; see part numbers and relevant packaging quantities.

DESIGN-IN SUPPORT

For complete Curve Computation, visit:
www.vishay.com/thermistors/ntc-curve-list/

MARKING

The thermistors are with a blue colored dot; see dimensions drawing and “Electrical Data and Ordering Information”.

MOUNTING

Important mounting and handling instructions: see www.vishay.com/doc?29222

By soldering in any position.
Not intended for potted applications.

ELECTRICAL DATA AND ORDERING INFORMATION

R_{25} (Ω)	R_{25}-TOL. (± %)	$B_{25/85}$ (K)	$B_{25/85}$-TOL. (± %)	UL RECOG. cULus	SAP MATERIAL AND ORDERING NUMBER (1)	
					NTCLE100E3....B0/T1/T2 RoHS-COMPLIANT WITH EXEMPTION (2)	NTCLE100E3....B0A/T1A/T2A RoHS-COMPLIANT
3.3	5	2880	3		338*B0	338*B0A
4.7	5	2880	3		478*B0	478*B0A
6.8	5	2880	3		688*B0	688*B0A
10	5	2990	3		109*B0	109*B0A
15	5	3041	3		159*B0	159*B0A
22	5	3136	3		229*B0	229*B0A
33	5	3390	3	✓	339*B0	339*B0A
47	5	3390	3	✓	479*B0	479*B0A
68	5	3390	3	✓	689*B0	689*B0A
100	5	3560	1.5	✓	101*B0	101*B0A
150	5	3560	1.5	✓	151*B0	151*B0A
220	5	3560	1.5	✓	221*B0	221*B0A

For technical questions, contact: nlr@vishay.com

THIS DOCUMENT IS SUBJECT TO CHANGE WITHOUT NOTICE. THE PRODUCTS DESCRIBED HEREIN AND THIS DOCUMENT ARE SUBJECT TO SPECIFIC DISCLAIMERS, SET FORTH AT www.vishay.com/doc?91000

ELECTRICAL DATA AND ORDERING INFORMATION

R_{25} (Ω)	R_{25}-TOL. (± %)	$B_{25/85}$ (K)	$B_{25/85}$-TOL. (± %)	UL RECOG. c UL us	SAP MATERIAL AND ORDERING NUMBER (1)	
					NTCLE100E3....B0/T1/T2 RoHS-COMPLIANT WITH EXEMPTION (2)	NTCLE100E3....B0A/T1A/T2A RoHS-COMPLIANT
330	5	3560	1.5	✓	331*B0	331*B0A
470	5	3560	1.5	✓	471*B0	471*B0A
680	5	3560	1.5	✓	681*B0	681*B0A
1000	2, 3, 5	3528	0.5	✓	102*B0	102*B0A
1500	2, 3, 5	3528	0.5	✓	152*B0	152*B0A
2000	2, 3, 5	3528	0.5	✓	202*B0	202*B0A
2200	2, 3, 5	3977	0.75	✓	222*B0	222*B0A
2700	2, 3, 5	3977	0.75	✓	272*B0	272*B0A
3300	2, 3, 5	3977	0.75	✓	332*B0	332*B0A
4700	2, 3, 5	3977	0.75	✓	472*B0	472*B0A
5000	2, 3, 5	3977	0.75	✓	502*B0	502*B0A
6800	2, 3, 5	3977	0.75	✓	682*B0	682*B0A
10 000	2, 3, 5	3977	0.75	✓	103*B0	103*B0A
12 000	2, 3, 5	3740	2	✓	123*B0	123*B0A
15 000	2, 3, 5	3740	2	✓	153*B0	153*B0A
22 000	2, 3, 5	3740	2	✓	223*B0	223*B0A
33 000	2, 3, 5	4090	1.5	✓	333*B0	333*B0A
47 000	2, 3, 5	4090	1.5	✓	473*B0	473*B0A
50 000	2, 3, 5	4190	1.5	✓	503*B0	503*B0A
68 000	2, 3, 5	4190	1.5	✓	683*B0	683*B0A
100 000	2, 3, 5	4190	1.5	✓	104*B0	104*B0A
150 000	2, 3, 5	4370	2.5	✓	154*B0	154*B0A
220 000	2, 3, 5	4370	2.5	✓	224*B0	224*B0A
330 000	2, 3, 5	4570	1.5		334*B0	334*B0A
470 000	2, 3, 5	4570	1.5		474*B0	474*B0A

Notes

Preferred versions for new designs

(1) Replace * in SAP by J for 5 %, H for 3 %, G for 2 %

(2) RoHS exemption 7(c)-I: electrical and electronic components containing lead in a glass or ceramic other than dielectric ceramic in capacitors, e.g. piezo-electronic devices, or in a glass or ceramic matrix compound

DIMENSIONS in millimeters

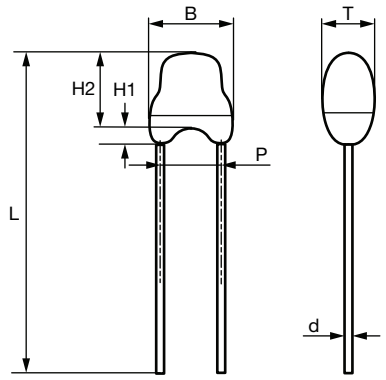

POWER DERATING

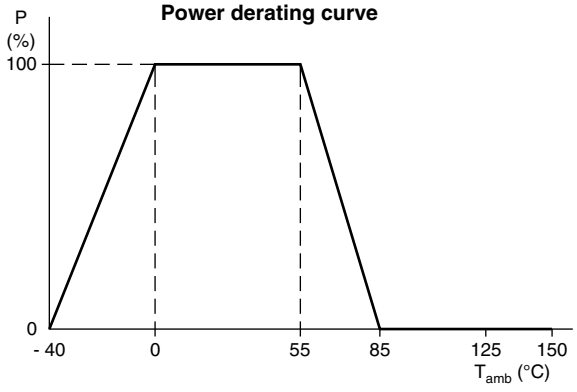

Note

- Zero power is considered as measuring power max. 1 % of max. power. Voltage on the NTC should always be below 50 V_{DC}

PHYSICAL DIMENSIONS FOR RELEVANT TYPE (all dimensions in millimeters)

R_{25}-VALUE	$B_{MAX.}$	d	H_1		$H_{2\ MAX.}$	L	P	$T_{MAX.}$
			MIN.	MAX.				
3.3 Ω to 220 Ω	5.0	0.6 ± 0.06	1.0	4.0	6.0	24 ± 1.5	2.54	4.0
330 Ω to 470 kΩ	3.3 ± 0.5	0.6 ± 0.06	1.0	3.0	6.0	24 ± 1.5	2.54	3.0

For technical questions, contact: nlr@vishay.com

THIS DOCUMENT IS SUBJECT TO CHANGE WITHOUT NOTICE. THE PRODUCTS DESCRIBED HEREIN AND THIS DOCUMENT ARE SUBJECT TO SPECIFIC DISCLAIMERS, SET FORTH AT www.vishay.com/doc?91000

TEMPERATURE DEVIATION AS A FUNCTION OF THE AMBIENT TEMPERATURE

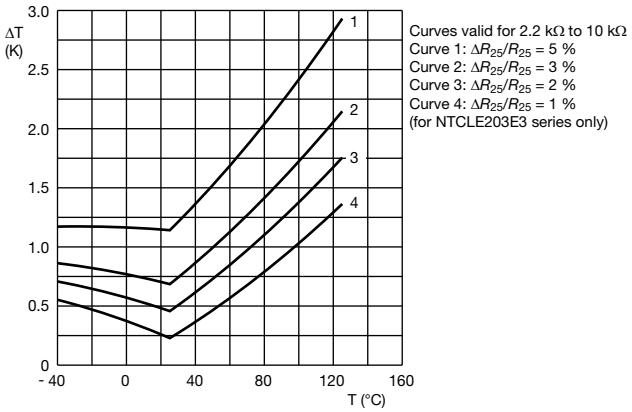

Curves valid for 2.2 kΩ to 10 kΩ
Curve 1: $\Delta R_{25}/R_{25}$ = 5 %
Curve 2: $\Delta R_{25}/R_{25}$ = 3 %
Curve 3: $\Delta R_{25}/R_{25}$ = 2 %
Curve 4: $\Delta R_{25}/R_{25}$ = 1 %
(for NTCLE203E3 series only)

TEMPERATURE DEVIATION AS A FUNCTION OF THE AMBIENT TEMPERATURE

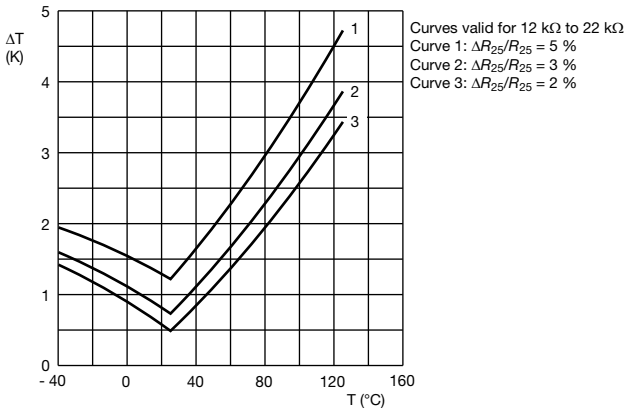

Curves valid for 12 kΩ to 22 kΩ
Curve 1: $\Delta R_{25}/R_{25}$ = 5 %
Curve 2: $\Delta R_{25}/R_{25}$ = 3 %
Curve 3: $\Delta R_{25}/R_{25}$ = 2 %

TEMPERATURE DEVIATION AS A FUNCTION OF THE AMBIENT TEMPERATURE

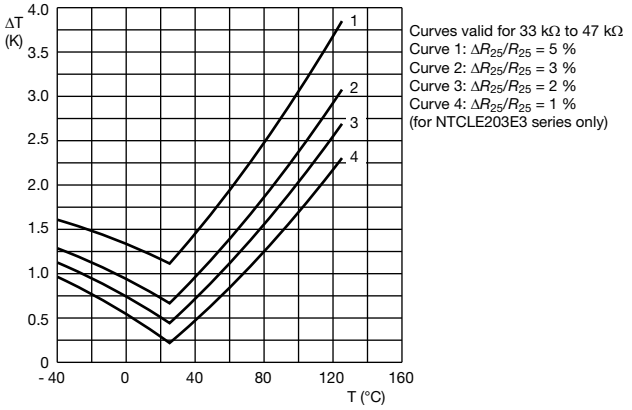

Curves valid for 33 kΩ to 47 kΩ
Curve 1: $\Delta R_{25}/R_{25}$ = 5 %
Curve 2: $\Delta R_{25}/R_{25}$ = 3 %
Curve 3: $\Delta R_{25}/R_{25}$ = 2 %
Curve 4: $\Delta R_{25}/R_{25}$ = 1 %
(for NTCLE203E3 series only)

TEMPERATURE DEVIATION AS A FUNCTION OF THE AMBIENT TEMPERATURE

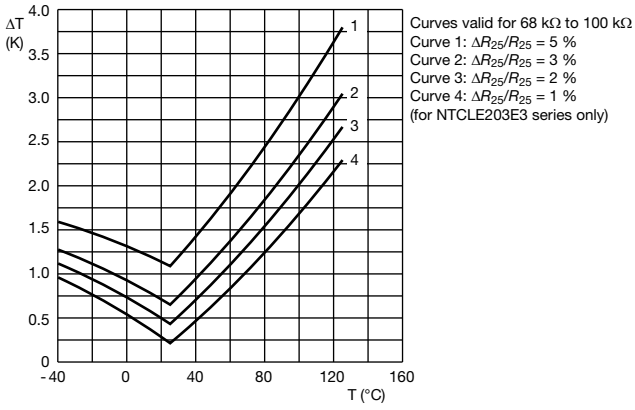

Curves valid for 68 kΩ to 100 kΩ
Curve 1: $\Delta R_{25}/R_{25}$ = 5 %
Curve 2: $\Delta R_{25}/R_{25}$ = 3 %
Curve 3: $\Delta R_{25}/R_{25}$ = 2 %
Curve 4: $\Delta R_{25}/R_{25}$ = 1 %
(for NTCLE203E3 series only)

TEMPERATURE DEVIATION AS A FUNCTION OF THE AMBIENT TEMPERATURE

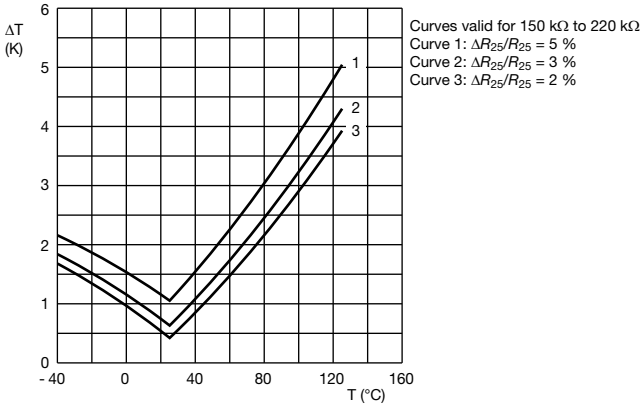

Curves valid for 150 kΩ to 220 kΩ
Curve 1: $\Delta R_{25}/R_{25}$ = 5 %
Curve 2: $\Delta R_{25}/R_{25}$ = 3 %
Curve 3: $\Delta R_{25}/R_{25}$ = 2 %

TEMPERATURE DEVIATION AS A FUNCTION OF THE AMBIENT TEMPERATURE

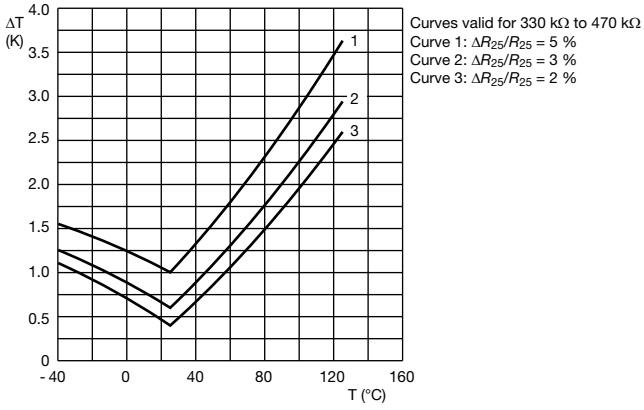

Curves valid for 330 kΩ to 470 kΩ
Curve 1: $\Delta R_{25}/R_{25}$ = 5 %
Curve 2: $\Delta R_{25}/R_{25}$ = 3 %
Curve 3: $\Delta R_{25}/R_{25}$ = 2 %

For technical questions, contact: nlr@vishay.com
THIS DOCUMENT IS SUBJECT TO CHANGE WITHOUT NOTICE. THE PRODUCTS DESCRIBED HEREIN AND THIS DOCUMENT ARE SUBJECT TO SPECIFIC DISCLAIMERS, SET FORTH AT www.vishay.com/doc?91000

R_T VALUE AND TOLERANCE

These thermistors have a narrow tolerance on the B-value, the result of which provides a very small tolerance on the nominal resistance value over a wide temperature range. For this reason the usual graphs of $R = f(T)$ are replaced by Resistance Values at Intermediate Temperatures Tables, together with a formula to calculate the characteristics with a high precision.

FORMULAE TO DETERMINE NOMINAL RESISTANCE VALUES

The resistance values at intermediate temperatures, or the operating temperature values, can be calculated using the following interpolation laws (extended *"Steinhart and Hart"*):

$$R_{(T)} = R_{ref} \times e^{(A + B/T + C/T^2 + D/T^3)}$$

$$T_{(R)} = \left(A_1 + B_1 \ln\frac{R}{R_{ref}} + C_1 \ln^2\frac{R}{R_{ref}} + D_1 \ln^3\frac{R}{R_{ref}}\right)^{-1}$$

where:

A, B, C, D, A_1, B_1, C_1 and D_1 are constant values depending on the material concerned; see table below.

$R_{ref.}$ is the resistance value at a reference temperature (in this event 25 °C, $R_{ref.} = R_{25}$).

T is the temperature in K. T (°C) = T (K) - 273.15

Formulae numbered and are interchangeable with an error of max. 0.005 °C in the range 25 °C to 125 °C and max. 0.015 °C in the range -40 °C to +25 °C.

DETERMINATION OF THE RESISTANCE / TEMPERATURE DEVIATION FROM NOMINAL VALUE

The total resistance deviation is obtained by combining the "R_{25}-tolerance" and the "resistance deviation due to B-tolerance".

When:

X = R_{25}-tolerance
Y = resistance deviation due to B-tolerance
Z = complete resistance deviation,

then: $Z = \left[\left(1 + \frac{X}{100}\right) \times \left(1 + \frac{Y}{100}\right) - 1\right] \times 100\ \%$ or $Z \approx X + Y$

When:

TCR = temperature coefficient
ΔT = temperature deviation,

then: $\Delta T = \frac{Z}{TCR}$

The temperature tolerances are plotted in the graphs on the previous page.

Example: at 0 °C, assume X = 5 %, Y = 0.92 % and TCR = 5.09 %/K (see table), then:

$$Z = \left\{\left[1 + \frac{5}{100}\right] \times \left[1 + \frac{0.92}{100}\right] - 1\right\} \times 100\ \%$$

$$= \{1.05 \times 1.0092 - 1\} \times 100\ \% = 5.966\ \%$$

$$\Delta T = \frac{Z}{TCR} = \frac{5.966}{5.09} \approx 1.17\ °C$$

A NTC with a R_{25}-value of 10 kΩ has a value of 32.55 kΩ between -1.17 °C and +1.17 °C.

PARAMETER FOR DETERMINING NOMINAL RESISTANCE VALUES

NUMBER	$B_{25/85}$ (K)	NAME	TOL. B (%)	A	B (K)	C (K^2)	D (K^3)	A_1	B_1 (K^{-1})	C_1 (K^{-2})	D_1 (K^{-3})
1	2880	Mat O. with Bn = 2880K	3	- 9.094	2251.74	229098	- 2.744820E+07	3.354016E-03	3.495020E-04	2.095959E-06	4.260615E-07
2	2990	Mat P. with Bn = 3990K	3	- 10.2296	2887.62	132336	- 2.502510E+07	3.354016E-03	3.415560E-04	4.955455E-06	4.364236E-07
3	3041	Mat Q. with Bn = 3041K	3	- 11.1334	3658.73	- 102895	5.166520E+05	3.354016E-03	3.349290E-04	3.683843E-06	7.050455E-07
4	3136	Mat R. with Bn = 3136K	3	- 12.4493	4702.74	- 402687	3.196830E+07	3.354016E-03	3.243880E-04	2.658012E-06	- 2.701560E-07
5	3390	Mat S. with Bn = 3390K	3	- 12.6814	4391.97	- 232807	1.509643E+07	3.354016E-03	2.993410E-04	2.135133E-06	- 5.672000E-09
6	3528 (1)	Mat I. with Bn = 3528K	0.5	- 12.0596	3687.667	- 7617.13	- 5.914730E+06	3.354016E-03	2.909670E-04	1.632136E-06	7.192200E-08
	3528 (2)			- 21.0704	11903.95	- 2504699	2.470338E+08	3.354016E-03	2.933908E-04	3.494314E-06	- 7.712690E-07
7	3560	Mat H. with Bn = 3560K	1.5	- 13.0723	4190.574	- 47158.4	- 1.199256E+07	3.354016E-03	2.884193E-04	4.118032E-06	1.786790E-07
8	3740	Mat B. with Bn = 3740K	2	- 13.8973	4557.725	- 98275	- 7.522357E+06	3.354016E-03	2.744032E-04	3.666944E-06	1.375492E-07
9	3977	Mat A. with Bn =3977K	0.75	- 14.6337	4791.842	- 115334	- 3.730535E+06	3.354016E-03	2.569850E-04	2.620131E-06	6.383091E-08
10	4090	Mat C. with Bn = 4090K	1.5	- 15.5322	5229.973	- 160451	- 5.414091E+06	3.354016E-03	2.519107E-04	3.510939E-06	1.105179E-07
11	4190	Mat D. with Bn = 4190K	1.5	- 16.0349	5459.339	- 191141	- 3.328322E+06	3.354016E-03	2.460382E-04	3.405377E-06	1.034240E-07
12	4370	Mat E. with Bn = 4370K	2.5	- 16.8717	5759.15	- 194267	- 6.869149E+06	3.354016E-03	2.367720E-04	3.585140E-06	1.255349E-07
13	4570	Mat F. with Bn = 4570K	1.5	- 17.6439	6022.726	- 203157	- 7.183526E+06	3.354016E-03	2.264097E-04	3.278184E-06	1.097628E-07

Notes
(1) Temperature < 25 °C
(2) Temperature ≥ 25 °C

For technical questions, contact: nlr@vishay.com
THIS DOCUMENT IS SUBJECT TO CHANGE WITHOUT NOTICE. THE PRODUCTS DESCRIBED HEREIN AND THIS DOCUMENT ARE SUBJECT TO SPECIFIC DISCLAIMERS, SET FORTH AT www.vishay.com/doc?91000

For complete Curve Computation, visit: www.vishay.com/thermistors/ntc-curve-list/

RESISTANCE VALUES AT INTERMEDIATE TEMPERATURES WITH R_{25} AT (3.3, 4.7, 6.8) Ω					
T_{OPER} (°C)	PART NUMBER NTCLE100E3338***	PART NUMBER NTCLE100E3478***	PART NUMBER NTCLE100E3688***	TCR (%/K)	$\Delta R/R$ DUE TO $B_{tol.}$ (%)
	R_T (Ω)	R_T (Ω)	R_T (Ω)		
-40	45.00	64.09	92.73	-4.97	8.08
-35	35.25	50.20	72.63	-4.80	7.30
-30	27.84	39.64	57.36	-4.64	6.55
-25	22.16	31.56	45.66	-4.48	5.84
-20	17.78	25.32	36.63	-4.33	5.15
-15	14.37	20.46	29.60	-4.19	4.49
-10	11.69	16.65	24.09	-4.05	3.85
-5	9.582	13.65	19.74	-3.92	3.24
0	7.904	11.26	16.29	-3.79	2.65
5	6.560	9.344	13.52	-3.66	2.08
10	5.479	7.803	11.29	-3.55	1.54
15	4.602	6.554	9.482	-3.43	1.01
20	3.886	5.535	8.008	-3.32	0.49
25	3.300	4.700	6.800	-3.22	0.00
30	2.816	4.011	5.803	-3.12	0.48
35	2.415	3.440	4.977	-3.02	0.94
40	2.081	2.964	4.289	-2.93	1.39
45	1.801	2.566	3.712	-2.84	1.82
50	1.566	2.230	3.227	-2.76	2.24
55	1.367	1.947	2.817	-2.68	2.65
60	1.198	1.706	2.469	-2.60	3.04
65	1.054	1.501	2.172	-2.52	3.43
70	0.9308	1.326	1.918	-2.45	3.80
75	0.8248	1.175	1.700	-2.38	4.16
80	0.7334	1.044	1.511	-2.32	4.51
85	0.6542	0.9318	1.348	-2.25	4.85
90	0.5854	0.8338	1.206	-2.19	5.19
95	0.5255	0.7484	1.083	-2.13	5.51
100	0.4730	0.6737	0.9748	-2.07	5.82
105	0.4270	0.6082	0.8799	-2.02	6.13
110	0.3865	0.5505	0.7965	-1.97	6.43
115	0.3508	0.4996	0.7228	-1.92	6.72
120	0.3192	0.4545	0.6576	-1.87	7.00
125	0.2911	0.4145	0.5998	-1.82	7.28
130	0.2661	0.3789	0.5483	-1.77	7.55
135	0.2438	0.3472	0.5023	-1.73	7.81
140	0.2238	0.3188	0.4612	-1.69	8.07
145	0.2059	0.2933	0.4244	-1.65	8.32
150	0.1899	0.2704	0.3912	-1.61	8.56

For technical questions, contact: nlr@vishay.com

THIS DOCUMENT IS SUBJECT TO CHANGE WITHOUT NOTICE. THE PRODUCTS DESCRIBED HEREIN AND THIS DOCUMENT ARE SUBJECT TO SPECIFIC DISCLAIMERS, SET FORTH AT www.vishay.com/doc?91000

For complete Curve Computation, visit: www.vishay.com/thermistors/ntc-curve-list/

RESISTANCE VALUES AT INTERMEDIATE TEMPERATURES WITH R_{25} AT (10, 15, 22) Ω									
T_{OPER} (°C)	PART NUMBER NTCLE100E3109***			PART NUMBER NTCLE100E3159***			PART NUMBER NTCLE100E3229***		
	R_T (Ω)	TCR (%/K)	$\Delta R/R$ DUE TO $B_{tol.}$ (%)	R_T (Ω)	TCR (%/K)	$\Delta R/R$ DUE TO $B_{tol.}$ (%)	R_T (Ω)	TCR (%/K)	$\Delta R/R$ DUE TO $B_{tol.}$ (%)
-40	136.7	-4.86	8.39	224.8	-5.16	8.65	374.9	-5.54	8.80
-35	107.6	-4.72	7.58	174.5	-4.98	7.79	285.8	-5.31	7.95
-30	85.32	-4.58	6.81	136.6	-4.80	6.98	220.4	-5.10	7.14
-25	68.10	-4.44	6.06	107.9	-4.64	6.21	171.7	-4.90	6.36
-20	54.72	-4.31	5.35	85.94	-4.48	5.47	135.0	-4.71	5.61
-15	44.25	-4.18	4.66	68.96	-4.33	4.76	107.2	-4.53	4.89
-10	36.02	-4.06	4.00	55.74	-4.19	4.08	85.79	-4.37	4.20
-5	29.49	-3.94	3.37	45.37	-4.05	3.43	69.21	-4.22	3.53
0	24.30	-3.82	2.75	37.17	-3.92	2.81	56.26	-4.07	2.89
5	20.13	-3.71	2.16	30.65	-3.80	2.20	46.05	-3.94	2.27
10	16.77	-3.60	1.59	25.42	-3.68	1.62	37.94	-3.81	1.67
15	14.04	-3.50	1.04	21.21	-3.57	1.06	31.45	-3.69	1.10
20	11.82	-3.39	0.51	17.79	-3.46	0.52	26.23	-3.57	0.54
25	10.00	-3.30	0.00	15.00	-3.36	0.00	22.00	-3.47	0.00
30	8.500	-3.20	0.50	12.76	-3.26	0.49	18.55	-3.36	0.52
35	7.259	-3.11	0.98	10.86	-3.17	0.98	15.72	-3.26	1.02
40	6.226	-3.03	1.44	9.291	-3.08	1.46	13.38	-3.17	1.51
45	5.363	-2.94	1.89	7.982	-2.99	1.92	11.45	-3.08	1.98
50	4.639	-2.86	2.33	6.887	-2.91	2.36	9.833	-3.00	2.44
55	4.029	-2.78	2.75	5.966	-2.83	2.79	8.482	-2.92	2.88
60	3.512	-2.71	3.16	5.189	-2.75	3.21	7.346	-2.84	3.32
65	3.073	-2.64	3.56	4.529	-2.68	3.62	6.386	-2.76	3.73
70	2.698	-2.57	3.95	3.968	-2.61	4.02	5.572	-2.69	4.14
75	2.377	-2.50	4.32	3.488	-2.54	4.41	4.879	-2.62	4.53
80	2.101	-2.43	4.69	3.077	-2.48	4.78	4.286	-2.56	4.91
85	1.864	-2.37	5.04	2.722	-2.41	5.15	3.777	-2.50	5.29
90	1.658	-2.31	5.38	2.416	-2.35	5.51	3.339	-2.44	5.65
95	1.479	-2.25	5.72	2.151	-2.30	5.85	2.960	-2.38	6.00
100	1.323	-2.20	6.05	1.920	-2.24	6.19	2.632	-2.32	6.34
105	1.187	-2.14	6.36	1.719	-2.19	6.53	2.347	-2.27	6.68
110	1.068	-2.09	6.67	1.543	-2.13	6.85	2.098	-2.22	7.00
115	0.9635	-2.04	6.98	1.389	-2.08	7.17	1.880	-2.17	7.32
120	0.8712	-1.99	7.27	1.253	-2.03	7.48	1.689	-2.12	7.62
125	0.7897	-1.94	7.56	1.133	-1.99	7.78	1.521	-2.07	7.93
130	0.7174	-1.90	7.84	1.027	-1.94	8.08	1.373	-2.03	8.22
135	0.6533	-1.85	8.11	0.9326	-1.90	8.37	1.242	-1.98	8.50
140	0.5961	-1.81	8.37	0.8490	-1.86	8.65	1.126	-1.94	8.78
145	0.5451	-1.77	8.63	0.7744	-1.82	8.93	1.023	-1.90	9.06
150	0.4995	-1.73	8.89	0.7079	-1.78	9.20	0.9309	-1.86	9.32

For technical questions, contact: nlr@vishay.com
THIS DOCUMENT IS SUBJECT TO CHANGE WITHOUT NOTICE. THE PRODUCTS DESCRIBED HEREIN AND THIS DOCUMENT ARE SUBJECT TO SPECIFIC DISCLAIMERS, SET FORTH AT www.vishay.com/doc?91000

For complete Curve Computation, visit: www.vishay.com/thermistors/ntc-curve-list/

RESISTANCE VALUES AT INTERMEDIATE TEMPERATURES WITH R_{25} AT (33, 47, 68) Ω					
T_{OPER} (°C)	PART NUMBER NTCLE100E3339*** R_T (Ω)	PART NUMBER NTCLE100E3479*** R_T (Ω)	PART NUMBER NTCLE100E3689*** R_T (Ω)	TCR (%/K)	$\Delta R/R$ DUE TO $B_{tol.}$ (%)
-40	707.0	1007	1457	-5.94	9.30
-35	528.5	752.7	1089	-5.70	8.44
-30	399.5	569.0	823.3	-5.49	7.60
-25	305.3	434.8	629.1	-5.28	6.79
-20	235.6	335.6	485.5	-5.09	6.01
-15	183.5	261.4	378.2	-4.90	5.25
-10	144.3	205.5	297.3	-4.73	4.51
-5	114.3	162.8	235.6	-4.57	3.80
0	91.34	130.1	188.2	-4.42	3.11
5	73.51	104.7	151.5	-4.27	2.45
10	59.59	84.87	122.8	-4.13	1.80
15	48.63	69.26	100.2	-4.00	1.18
20	39.94	56.88	82.29	-3.88	0.58
25	33.00	47.00	68.00	-3.76	0.00
30	27.43	39.06	56.51	-3.64	0.56
35	22.92	32.64	47.23	-3.54	1.11
40	19.26	27.42	39.68	-3.43	1.63
45	16.26	23.16	33.50	-3.34	2.14
50	13.79	19.65	28.42	-3.24	2.63
55	11.76	16.74	24.23	-3.15	3.11
60	10.06	14.33	20.74	-3.07	3.57
65	8.652	12.32	17.83	-2.98	4.02
70	7.468	10.64	15.39	-2.90	4.45
75	6.471	9.216	13.33	-2.83	4.87
80	5.628	8.015	11.60	-2.76	5.27
85	4.912	6.996	10.12	-2.69	5.66
90	4.302	6.127	8.865	-2.62	6.04
95	3.780	5.384	7.790	-2.55	6.41
100	3.332	4.746	6.867	-2.49	6.77
105	2.946	4.196	6.071	-2.43	7.11
110	2.613	3.721	5.384	-2.37	7.45
115	2.324	3.310	4.788	-2.32	7.77
120	2.072	2.951	4.270	-2.26	8.09
125	1.853	2.639	3.818	-2.21	8.39
130	1.661	2.365	3.422	-2.16	8.69
135	1.492	2.125	3.075	-2.11	8.97
140	1.344	1.914	2.770	-2.07	9.25
145	1.213	1.728	2.500	-2.02	9.52
150	1.098	1.564	2.262	-1.98	9.79

For technical questions, contact: nlr@vishay.com

THIS DOCUMENT IS SUBJECT TO CHANGE WITHOUT NOTICE. THE PRODUCTS DESCRIBED HEREIN AND THIS DOCUMENT ARE SUBJECT TO SPECIFIC DISCLAIMERS, SET FORTH AT www.vishay.com/doc?91000

For complete Curve Computation, visit: www.vishay.com/thermistors/ntc-curve-list/

RESISTANCE VALUES AT INTERMEDIATE TEMPERATURES WITH R_{25} AT (100, 150, 220, 330, 470, 680) Ω								
T_{OPER} (°C)	PART NUMBER NTCLE100E3101***	PART NUMBER NTCLE100E3151***	PART NUMBER NTCLE100E3221***	PART NUMBER NTCLE100E3331***	PART NUMBER NTCLE100E3471***	PART NUMBER NTCLE100E3681***	TCR (%/K)	$\Delta R/R$ DUE TO $B_{tol.}$ (%)
	R_T (Ω)	R_T (Ω)	R_T (Ω)	R_T (Ω)	R_T (Ω)	R_T (Ω)		
-40	2193	3289	4824	7236	10 305	14 910	-5.75	4.99
-35	1652	2478	3635	5452	7766	11 235	-5.57	4.51
-30	1256	1884	2763	4144	5902	8540	-5.40	4.05
-25	962.5	1444	2117	3176	4524	6545	-5.24	3.61
-20	743.6	1115	1636	2454	3495	5057	-5.08	3.19
-15	579.0	868.5	1274	1911	2721	3937	-4.93	2.78
-10	454.2	681.2	999.1	1499	2135	3088	-4.78	2.38
-5	358.8	538.2	789.4	1184	1686	2440	-4.64	2.01
0	285.4	428.2	628.0	942.0	1342	1941	-4.51	1.64
5	228.6	342.9	502.9	754.4	1074	1554	-4.38	1.29
10	184.2	276.4	405.3	608.0	866.0	1253	-4.25	0.95
15	149.4	224.1	328.7	493.1	702.2	1016	-4.13	0.62
20	121.9	182.8	268.2	402.2	572.9	828.8	-4.01	0.31
25	100.0	150.0	220.0	330.0	470.0	680.0	-3.90	0.00
30	82.49	123.7	181.5	272.2	387.7	561.0	-3.80	0.30
35	68.41	102.6	150.5	225.8	321.5	465.2	-3.69	0.58
40	57.02	85.54	125.5	188.2	268.0	387.8	-3.59	0.86
45	47.77	71.65	105.1	157.6	224.5	324.8	-3.50	1.13
50	40.20	60.30	88.44	132.7	188.9	273.3	-3.40	1.39
55	33.98	50.98	74.76	112.1	159.7	231.1	-3.31	1.64
60	28.86	43.28	63.48	95.23	135.6	196.2	-3.23	1.88
65	24.61	36.91	54.13	81.20	115.6	167.3	-3.15	2.12
70	21.07	31.60	46.35	69.52	99.01	143.3	-3.07	2.35
75	18.11	27.16	39.84	59.76	85.11	123.1	-2.99	2.57
80	15.62	23.43	34.37	51.56	73.43	106.2	-2.91	2.79
85	13.53	20.29	29.76	44.65	63.59	92.00	-2.84	3.00
90	11.76	17.63	25.86	38.80	55.26	79.95	-2.77	3.21
95	10.25	15.38	22.55	33.83	48.18	69.71	-2.71	3.41
100	8.968	13.45	19.73	29.59	42.15	60.98	-2.64	3.60
105	7.871	11.81	17.32	25.97	36.99	53.52	-2.58	3.79
110	6.928	10.39	15.24	22.86	32.56	47.11	-2.52	3.97
115	6.117	9.176	13.46	20.19	28.75	41.60	-2.46	4.15
120	5.416	8.125	11.92	17.87	25.46	36.83	-2.41	4.33
125	4.809	7.214	10.58	15.87	22.60	32.70	-2.35	4.50
130	4.282	6.422	9.419	14.13	20.12	29.11	-2.30	4.66
135	3.822	5.732	8.408	12.61	17.96	25.99	-2.25	4.83
140	3.420	5.130	7.523	11.29	16.07	23.25	-2.20	4.99
145	3.068	4.601	6.749	10.12	14.42	20.86	-2.15	5.14
150	2.758	4.137	6.068	9.102	12.96	18.76	-2.10	5.29

For technical questions, contact: nlr@vishay.com
THIS DOCUMENT IS SUBJECT TO CHANGE WITHOUT NOTICE. THE PRODUCTS DESCRIBED HEREIN AND THIS DOCUMENT ARE SUBJECT TO SPECIFIC DISCLAIMERS, SET FORTH AT www.vishay.com/doc?91000

For complete Curve Computation, visit: www.vishay.com/thermistors/ntc-curve-list/

RESISTANCE VALUES AT INTERMEDIATE TEMPERATURES WITH R_{25} AT (1, 1.5, 2) kΩ					
T_{OPER} (°C)	PART NUMBER NTCLE100E3102***	PART NUMBER NTCLE100E3152***	PART NUMBER NTCLE100E3202***	TCR (%/K)	$\Delta R/R$ DUE TO $B_{tol.}$ (%)
	R_T (Ω)	R_T (Ω)	R_T (Ω)		
-40	23 342	35 013	46 684	-6.06	1.65
-35	17 336	26 004	34 672	-5.84	1.49
-30	13 018	19 526	26 035	-5.62	1.34
-25	9877	14 816	19 754	-5.42	1.19
-20	7569	11 353	15 138	-5.23	1.05
-15	5855	8782	11 709	-5.05	0.92
-10	4569	6854	9138	-4.87	0.79
-5	3596	5395	7193	-4.71	0.66
0	2854	4280	5707	-4.55	0.54
5	2282	3422	4563	-4.40	0.43
10	1838	2757	3675	-4.26	0.31
15	1491	2236	2981	-4.12	0.21
20	1217	1826	2434	-3.99	0.10
25	1000	1500	2000	-3.87	0.00
30	826.6	1240	1653	-3.75	0.10
35	687.3	1031	1375	-3.63	0.19
40	574.6	861.9	1149	-3.53	0.28
45	482.7	724.0	965.4	-3.42	0.37
50	407.4	611.0	814.7	-3.32	0.46
55	345.2	517.8	690.5	-3.23	0.54
60	293.7	440.6	587.4	-3.14	0.62
65	250.8	376.2	501.6	-3.05	0.70
70	214.9	322.4	429.8	-2.97	0.78
75	184.7	277.1	369.5	-2.89	0.86
80	159.3	238.9	318.6	-2.81	0.93
85	137.7	206.6	275.5	-2.73	1.01
90	119.4	179.1	238.8	-2.66	1.08
95	103.8	155.7	207.6	-2.59	1.15
100	90.45	135.7	180.9	-2.53	1.22
105	79.00	118.5	158.0	-2.46	1.29
110	69.15	103.7	138.3	-2.40	1.35
115	60.66	90.99	121.3	-2.34	1.42
120	53.32	79.98	106.6	-2.29	1.48
125	46.96	70.44	93.92	-2.23	1.55
130	41.43	62.15	82.87	-2.18	1.61
135	36.63	54.94	73.25	-2.13	1.67
140	32.43	48.65	64.87	-2.08	1.73
145	28.77	43.16	57.54	-2.03	1.79
150	25.56	38.34	51.12	-1.98	1.85

For technical questions, contact: nlr@vishay.com

THIS DOCUMENT IS SUBJECT TO CHANGE WITHOUT NOTICE. THE PRODUCTS DESCRIBED HEREIN AND THIS DOCUMENT ARE SUBJECT TO SPECIFIC DISCLAIMERS, SET FORTH AT www.vishay.com/doc?91000

For complete Curve Computation, visit: www.vishay.com/thermistors/ntc-curve-list/

RESISTANCE VALUES AT INTERMEDIATE TEMPERATURES WITH R_{25} AT (2.2, 2.7, 3.3, 4.7, 5.0, 6.8, 10) kΩ									
T_{OPER} (°C)	PART NUMBER NTCLE100E3222***	PART NUMBER NTCLE100E3272***	PART NUMBER NTCLE100E3332***	PART NUMBER NTCLE100E3472***	PART NUMBER NTCLE100E3502***	PART NUMBER NTCLE100E3682***	PART NUMBER NTCLE100E3103***	TCR (%/K)	$\Delta R/R$ DUE TO $B_{tol.}$ (%)
	R_T (Ω)	R_T (Ω)	R_T (Ω)	R_T (Ω)	R_T (Ω)	R_T (Ω)	R_T (Ω)		
-40	73 061	89 665	109 591	156 084	166 047	225 824	332 094	-6.62	2.79
-35	52 778	64 773	79 167	112 753	119 950	163 132	239 900	-6.39	2.52
-30	38 544	47 304	57 816	82 344	87 600	119 136	175 200	-6.18	2.26
-25	28 443	34 907	42 665	60 765	64 643	87 915	129 287	-5.98	2.02
-20	21 199	26 017	31 798	45 288	48 179	65 524	96 358	-5.78	1.78
-15	15 950	19 575	23 925	34 075	36 250	49 300	72 500	-5.60	1.55
-10	12 110	14 862	18 165	25 872	27 523	37 431	55 046	-5.42	1.33
-5	9275	11 382	13 912	19 814	21 078	28 667	42 157	-5.25	1.12
0	7162	8790	10 743	15 300	16 277	22 137	32 554	-5.09	0.92
5	5574	6841	8362	11 909	12 669	17 230	25 339	-4.93	0.72
10	4372	5365	6558	9340	9936	13 513	19 872	-4.79	0.53
15	3454	4239	5180	7378	7849	10 675	15 698	-4.64	0.35
20	2747	3372	4121	5869	6244	8492	12 488	-4.51	0.17
25	2200	2700	3300	4700	5000	6800	10 000	-4.38	0.00
30	1773	2176	2659	3788	4030	5480	8059	-4.25	0.17
35	1438	1764	2156	3071	3267	4444	6535	-4.13	0.32
40	1173	1439	1759	2505	2665	3624	5330	-4.02	0.48
45	961.8	1180	1443	2055	2186	2973	4372	-3.91	0.63
50	793.2	973.4	1190	1694	1803	2452	3605	-3.80	0.77
55	657.5	806.9	986.3	1405	1494	2032	2989	-3.70	0.91
60	547.8	672.3	821.7	1170	1245	1693	2490	-3.60	1.05
65	458.6	562.8	687.9	979.7	1042	1417	2084	-3.51	1.18
70	385.7	473.3	578.5	823.9	876.5	1192	1753	-3.42	1.31
75	325.8	399.8	488.7	696.0	740.5	1007	1481	-3.33	1.44
80	276.4	339.2	414.6	590.5	628.2	854.3	1256	-3.25	1.56
85	235.5	289.0	353.2	503.0	535.2	727.8	1070	-3.17	1.68
90	201.4	247.2	302.1	430.2	457.7	622.5	915.4	-3.09	1.79
95	172.9	212.2	259.4	369.4	393.0	534.5	786.0	-3.01	1.90
100	149.0	182.9	223.5	318.3	338.6	460.6	677.3	-2.94	2.01
105	128.9	158.2	193.3	275.3	292.9	398.3	585.7	-2.87	2.12
110	111.8	137.2	167.7	238.9	254.2	345.7	508.3	-2.80	2.22
115	97.37	119.5	146.1	208.0	221.3	301.0	442.6	-2.74	2.32
120	85.05	104.4	127.6	181.7	193.3	262.9	386.6	-2.67	2.42
125	74.52	91.46	111.8	159.2	169.4	230.3	338.7	-2.61	2.51
130	65.49	80.38	98.24	139.9	148.8	202.4	297.7	-2.55	2.61
135	57.72	70.84	86.59	123.3	131.2	178.4	262.4	-2.50	2.70
140	51.02	62.62	76.53	109.0	116.0	157.7	231.9	-2.44	2.78
145	45.22	55.49	67.83	96.60	102.8	139.8	205.5	-2.39	2.87
150	40.18	49.31	60.27	85.84	91.32	124.2	182.6	-2.34	2.96

For technical questions, contact: nlr@vishay.com
THIS DOCUMENT IS SUBJECT TO CHANGE WITHOUT NOTICE. THE PRODUCTS DESCRIBED HEREIN AND THIS DOCUMENT ARE SUBJECT TO SPECIFIC DISCLAIMERS, SET FORTH AT www.vishay.com/doc?91000

For complete Curve Computation, visit: www.vishay.com/thermistors/ntc-curve-list/

RESISTANCE VALUES AT INTERMEDIATE TEMPERATURES WITH R_{25} AT (12, 15, 22) kΩ					
T_{OPER} (°C)	PART NUMBER NTCLE100E3123***	PART NUMBER NTCLE100E3153***	PART NUMBER NTCLE100E3223***	TCR (%/K)	$\Delta R/R$ DUE TO $B_{tol.}$ (%)
	R_T (kΩ)	R_T (kΩ)	R_T (kΩ)		
-40	309.4	386.7	567.2	-6.07	7.00
-35	229.5	286.9	420.8	-5.88	6.32
-30	171.8	214.8	315.0	-5.70	5.68
-25	129.8	162.3	238.0	-5.52	5.06
-20	98.93	123.7	181.4	-5.35	4.46
-15	76.02	95.02	139.4	-5.19	3.89
-10	58.88	73.60	107.9	-5.03	3.34
-5	45.95	57.44	84.25	-4.88	2.81
0	36.13	45.16	66.24	-4.74	2.30
5	28.61	35.76	52.45	-4.60	1.80
10	22.80	28.51	41.81	-4.47	1.33
15	18.30	22.87	33.55	-4.34	0.87
20	14.77	18.47	27.08	-4.22	0.43
25	12.00	15.00	22.00	-4.10	0.00
30	9.804	12.25	17.97	-3.99	0.41
35	8.054	10.07	14.77	-3.88	0.81
40	6.652	8.315	12.20	-3.77	1.20
45	5.522	6.903	10.12	-3.67	1.58
50	4.607	5.759	8.447	-3.58	1.94
55	3.862	4.828	7.081	-3.48	2.29
60	3.252	4.066	5.963	-3.39	2.64
65	2.751	3.439	5.044	-3.30	2.97
70	2.337	2.921	4.284	-3.22	3.29
75	1.993	2.492	3.654	-3.14	3.60
80	1.707	2.134	3.129	-3.06	3.91
85	1.467	1.834	2.690	-2.99	4.20
90	1.266	1.582	2.321	-2.92	4.49
95	1.096	1.370	2.010	-2.85	4.77
100	0.9524	1.190	1.746	-2.78	5.04
105	0.8302	1.038	1.522	-2.71	5.31
110	0.7260	0.9075	1.331	-2.65	5.56
115	0.6369	0.7961	1.168	-2.59	5.82
120	0.5604	0.7005	1.027	-2.53	6.06
125	0.4945	0.6181	0.9065	-2.47	6.30
130	0.4375	0.5469	0.8022	-2.42	6.53
135	0.3882	0.4853	0.7117	-2.37	6.76
140	0.3454	0.4317	0.6332	-2.31	6.98
145	0.3080	0.3850	0.5647	-2.26	7.20
150	0.2754	0.3442	0.5049	-2.22	7.41

For technical questions, contact: nlr@vishay.com

THIS DOCUMENT IS SUBJECT TO CHANGE WITHOUT NOTICE. THE PRODUCTS DESCRIBED HEREIN AND THIS DOCUMENT ARE SUBJECT TO SPECIFIC DISCLAIMERS, SET FORTH AT www.vishay.com/doc?91000

For complete Curve Computation, visit: www.vishay.com/thermistors/ntc-curve-list/

RESISTANCE VALUES AT INTERMEDIATE TEMPERATURES WITH R_{25} AT (33, 47, 50, 68, 100) kΩ									
T_{OPER} (°C)	PART NUMBER NTCLE100E3								
	333***	473***	TCR (%/K)	$\Delta R/R$ DUE TO $B_{tol.}$ (%)	503***	683***	104***	TCR (%/K)	$\Delta R/R$ DUE TO $B_{tol.}$ (%)
	R_T (kΩ)	R_T (kΩ)			R_T (kΩ)	R_T (kΩ)	R_T (kΩ)		
-40	1116	1589	-6.54	5.74	1833	2493	3666	-6.69	5.88
-35	808.6	1152	-6.34	5.19	1319	1794	2638	-6.49	5.31
-30	591.7	842.8	-6.15	4.66	958.3	1303	1917	-6.29	4.77
-25	437.1	622.6	-5.96	4.15	703.1	956.2	1406	-6.10	4.25
-20	325.9	464.1	-5.79	3.66	520.6	708.0	1041	-5.92	3.75
-15	245.0	349.0	-5.62	3.19	388.9	528.9	777.8	-5.75	3.27
-10	185.8	264.6	-5.45	2.74	293.0	398.5	586.1	-5.58	2.80
-5	142.0	202.3	-5.30	2.30	222.6	302.8	445.3	-5.42	2.36
0	109.4	155.8	-5.14	1.88	170.5	231.8	340.9	-5.26	1.93
5	84.91	120.9	-5.00	1.48	131.5	178.9	263.1	-5.11	1.52
10	66.37	94.53	-4.86	1.09	102.2	139.0	204.4	-4.97	1.12
15	52.24	74.40	-4.72	0.71	80.01	108.8	160.0	-4.83	0.73
20	41.39	58.95	-4.59	0.35	63.04	85.74	126.1	-4.70	0.36
25	33.00	47.00	-4.47	0.00	50.00	68.00	100.0	-4.57	0.00
30	26.47	37.71	-4.35	0.34	39.90	54.27	79.81	-4.45	0.35
35	21.37	30.43	-4.23	0.67	32.04	43.57	64.08	-4.33	0.68
40	17.34	24.70	-4.12	0.99	25.87	35.19	51.75	-4.22	1.01
45	14.15	20.15	-4.01	1.29	21.01	28.57	42.02	-4.11	1.33
50	11.61	16.53	-3.91	1.59	17.15	23.33	34.31	-4.00	1.63
55	9.572	13.63	-3.81	1.88	14.08	19.15	28.16	-3.90	1.93
60	7.931	11.30	-3.71	2.16	11.61	15.79	23.22	-3.80	2.21
65	6.603	9.404	-3.62	2.43	9.623	13.09	19.25	-3.71	2.49
70	5.522	7.865	-3.53	2.70	8.012	10.90	16.02	-3.62	2.76
75	4.639	6.607	-3.44	2.95	6.701	9.114	13.40	-3.53	3.03
80	3.913	5.573	-3.36	3.20	5.629	7.655	11.26	-3.45	3.28
85	3.315	4.721	-3.28	3.45	4.748	6.457	9.496	-3.36	3.53
90	2.819	4.015	-3.20	3.68	4.021	5.469	8.042	-3.28	3.77
95	2.406	3.427	-3.13	3.91	3.419	4.649	6.837	-3.21	4.01
100	2.062	2.936	-3.05	4.13	2.918	3.968	5.835	-3.13	4.24
105	1.773	2.525	-2.98	4.35	2.499	3.399	4.998	-3.06	4.46
110	1.530	2.179	-2.92	4.56	2.148	2.921	4.296	-2.99	4.68
115	1.324	1.886	-2.85	4.77	1.853	2.519	3.705	-2.93	4.89
120	1.150	1.638	-2.79	4.97	1.603	2.180	3.206	-2.86	5.09
125	1.002	1.427	-2.73	5.17	1.392	1.892	2.783	-2.80	5.29
130	0.8757	1.247	-2.67	5.36	1.212	1.648	2.423	-2.74	5.49
135	0.7675	1.093	-2.61	5.54	1.058	1.439	2.116	-2.68	5.68
140	0.6746	0.9608	-2.55	5.73	0.9269	1.261	1.854	-2.62	5.87
145	0.5946	0.8468	-2.50	5.90	0.8141	1.107	1.628	-2.57	6.05
150	0.5254	0.7483	-2.45	6.08	0.7170	0.9752	1.434	-2.51	6.23

For technical questions, contact: nlr@vishay.com

THIS DOCUMENT IS SUBJECT TO CHANGE WITHOUT NOTICE. THE PRODUCTS DESCRIBED HEREIN AND THIS DOCUMENT ARE SUBJECT TO SPECIFIC DISCLAIMERS, SET FORTH AT www.vishay.com/doc?91000

For complete Curve Computation, visit: www.vishay.com/thermistors/ntc-curve-list/

RESISTANCE VALUES AT INTERMEDIATE TEMPERATURES WITH R_{25} AT (150, 220, 330, 470) kΩ								
T_{OPER} (°C)	PART NUMBER NTCLE100E3							
	154***	224***	TCR (%/K)	$\Delta R/R$ DUE TO $B_{tol.}$ (%)	334***	474***	TCR (%/K)	$\Delta R/R$ DUE TO $B_{tol.}$ (%)
	R_T (kΩ)	R_T (kΩ)			R_T (kΩ)	R_T (kΩ)		
-40	6153	9024	-6.83	10.22	16 044	22 850	-7.14	6.41
-35	4394	6444	-6.64	9.24	11 282	16 068	-6.94	5.80
-30	3168	4646	-6.45	8.29	8013	11 413	-6.74	5.20
-25	2305	3381	-6.27	7.39	5747	8185	-6.55	4.64
-20	1693	2483	-6.09	6.52	4161	5926	-6.37	4.09
-15	1254	1839	-5.92	5.68	3040	4329	-6.19	3.57
-10	936.4	1373	-5.75	4.88	2240	3190	-6.02	3.06
-5	705.0	1034	-5.60	4.10	1665	2371	-5.85	2.57
0	535.0	784.7	-5.44	3.36	1248	1777	-5.69	2.11
5	409.1	600.0	-5.29	2.64	942.3	1342	-5.54	1.65
10	315.1	462.1	-5.15	1.94	717.1	1021	-5.39	1.22
15	244.4	358.4	-5.01	1.27	549.8	783.0	-5.24	0.80
20	190.8	279.9	-4.88	0.63	424.5	604.6	-5.10	0.39
25	150.0	220.0	-4.75	0.00	330.0	470.0	-4.97	0.00
30	118.6	174.0	-4.63	0.60	258.2	367.8	-4.84	0.38
35	94.42	138.5	-4.51	1.19	203.4	289.6	-4.72	0.75
40	75.58	110.9	-4.39	1.76	161.1	229.5	-4.59	1.10
45	60.85	89.24	-4.28	2.30	128.4	182.9	-4.48	1.45
50	49.25	72.24	-4.17	2.83	103.0	146.7	-4.37	1.78
55	40.08	58.78	-4.07	3.35	83.00	118.2	-4.26	2.10
60	32.78	48.08	-3.97	3.85	67.26	95.80	-4.15	2.41
65	26.94	39.51	-3.87	4.33	54.79	78.04	-4.05	2.72
70	22.25	32.63	-3.78	4.80	44.85	63.88	-3.95	3.01
75	18.46	27.07	-3.69	5.26	36.90	52.55	-3.86	3.30
80	15.38	22.56	-3.60	5.70	30.49	43.43	-3.77	3.58
85	12.87	18.88	-3.52	6.14	25.31	36.05	-3.68	3.85
90	10.82	15.87	-3.44	6.56	21.10	30.06	-3.59	4.11
95	9.129	13.39	-3.36	6.96	17.67	25.16	-3.51	4.37
100	7.732	11.34	-3.28	7.36	14.85	21.15	-3.43	4.62
105	6.574	9.642	-3.21	7.75	12.53	17.85	-3.35	4.86
110	5.610	8.228	-3.14	8.13	10.62	15.12	-3.28	5.10
115	4.804	7.046	-3.07	8.49	9.029	12.86	-3.21	5.33
120	4.128	6.054	-3.00	8.85	7.704	10.97	-3.14	5.55
125	3.559	5.219	-2.94	9.20	6.597	9.396	-3.07	5.77
130	3.078	4.514	-2.87	9.54	5.668	8.072	-3.00	5.99
135	2.670	3.916	-2.81	9.87	4.885	6.958	-2.94	6.20
140	2.323	3.408	-2.75	10.20	4.224	6.016	-2.88	6.40
145	2.028	2.974	-2.69	10.52	3.663	5.217	-2.82	6.60
150	1.774	2.603	-2.64	10.83	3.186	4.538	-2.76	6.79

For technical questions, contact: nlr@vishay.com

THIS DOCUMENT IS SUBJECT TO CHANGE WITHOUT NOTICE. THE PRODUCTS DESCRIBED HEREIN AND THIS DOCUMENT ARE SUBJECT TO SPECIFIC DISCLAIMERS, SET FORTH AT www.vishay.com/doc?91000

PACKAGING
TAPE SPECIFICATIONS

Thermistors on tape

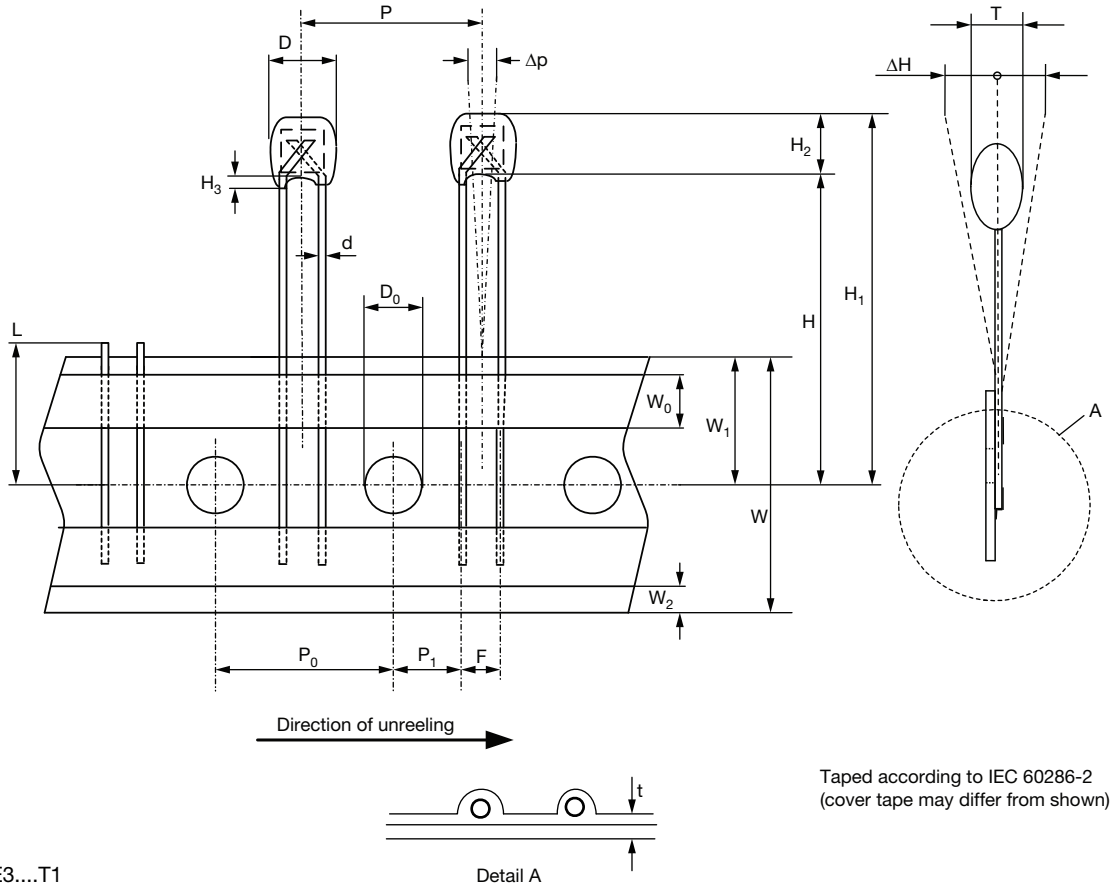

Taped according to IEC 60286-2
(cover tape may differ from shown)

1E pitch
NTCLE100E3....T1

DIMENSIONS in millimeters				
DETAILS	**SYMBOL**	**DIMENSIONS NOMINAL**	**TOLERANCE**	**REMARKS**
Body diameter Lead diameter Feed hole diameter	D d D_0	3.3 0.6 4.0	± 0.5 ± 0.06 ± 0.2	5 max. for 3.3 Ω to 220 Ω
Lead to lead distance	F	2.5	+0.5 -0.2	Guaranteed between component and tape
Distance component to tape center Component height Component alignment Distance top/bottom of components Length of lacquer under the comp. bottom	H H_1 Δh H_2 H_3	22.0 32.2 0 6 2	± 1.0 max. ± 2.0 max. ± 1	 1 to 4 max. for 3.3 Ω to 220 Ω
Length of snipped lead	L	11.0	max.	
Pitch between thermistors Feed hole pitch Feed hole center to lead center Component alignment	P P_0 P_1 Δp	12.7 12.7 5.08 0	± 1.0 ± 0.3 ± 0.7 ± 1.3	Cumulative pitch error ± 1 mm / 20 pitches guaranteed between component and tape
Total thickness Total tape thickness	T t	3.0 0.9	max. max.	4 max. for 3.3 Ω to 220 Ω with cardboard tape 0.5 ± 0.1
Tape width Hold down tape width Hole position Hold down tape position	W W_0 W_1 W_2	18.0 5.0 9.0 1.5	± 1.0 - 0.5 ± 0.3 ± 0.5 ± 1.0	None of the hold down tapes may cover the holes

For technical questions, contact: nlr@vishay.com
THIS DOCUMENT IS SUBJECT TO CHANGE WITHOUT NOTICE. THE PRODUCTS DESCRIBED HEREIN AND THIS DOCUMENT ARE SUBJECT TO SPECIFIC DISCLAIMERS, SET FORTH AT www.vishay.com/doc?91000

Thermistors on tape

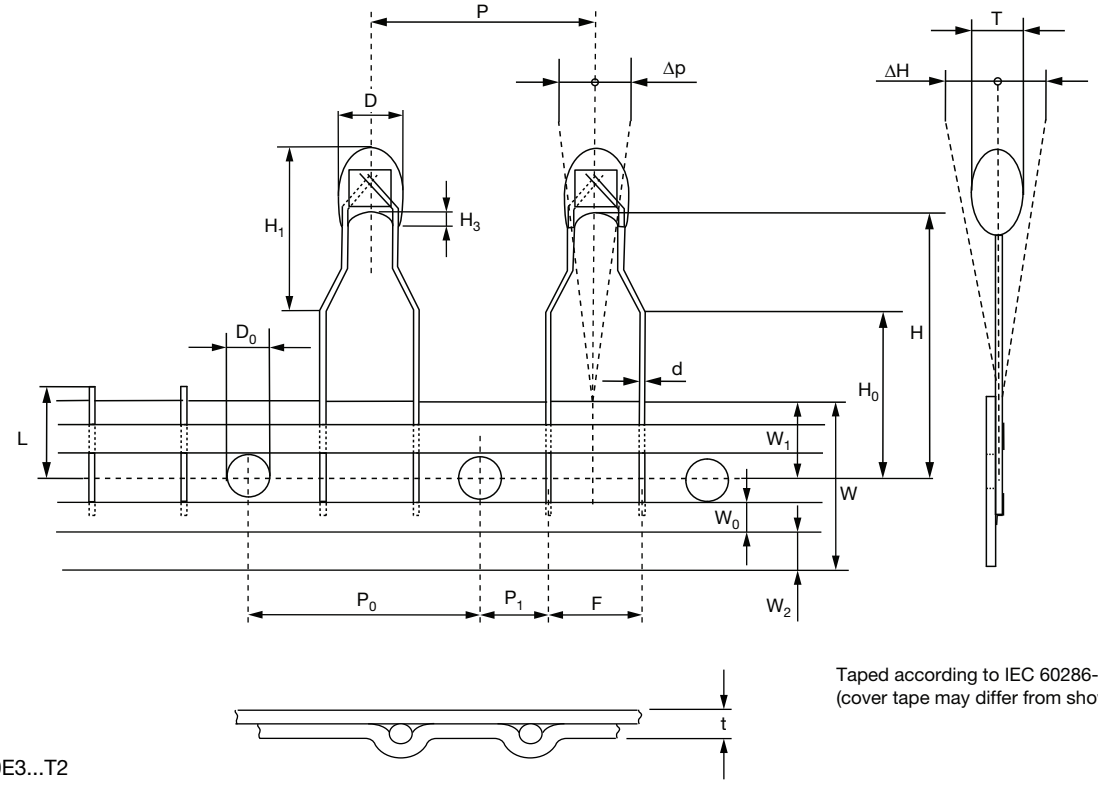

Taped according to IEC 60286-2
(cover tape may differ from shown)

2E pitch
NTCLE100E3...T2

DIMENSIONS in millimeters				
DETAILS	**SYMBOL**	**DIMENSIONS NOMINAL**	**TOLERANCE**	**REMARKS**
Body diameter Lead diameter Feed hole diameter	D d D_0	3.3 0.6 4.0	± 0.5 ± 0.06 ± 0.2	5 max. for 3.3 Ω to 220 Ω
Lead to lead distance	F	5.0	+0.5 -0.2	Guaranteed between component and tape
Distance component to tape center Component height Component alignment Distance top/bottom of components Length of lacquer under the comp. bottom	H H_0 H_1 Δh H_3	20.0 16.0 10.0 0.0 2.0	± 2.0 ± 0.5 max. ± 2.0 ± 1.0	12 max. for 100 Ω to 220 Ω
Length of snipped lead	L	11.0	max.	
Pitch between thermistors Feed hole pitch Feed hole center to lead center Component alignment	P P_0 P_1 Δp	12.7 12.7 3.81 0.0	± 1.0 ± 0.3 ± 0.7 ± 1.3	Cumulative pitch error ± 1 mm / 20 pitches guaranteed between component and tape
Total thickness Total tape thickness	T t	3.0 0.9	max. max.	4 max. for 3.3 Ω to 220 Ω with cardboard tape 0.5 ± 0.1
Tape width Hold down tape width Hole position Hold down tape position	W W_0 W_1 W_2	18.0 5.0 9.0 1.5	± 1.0 - 0.5 ± 0.3 ± 0.5 ± 1.0	None of the hold down tapes may cover the holes

For technical questions, contact: nlr@vishay.com

THIS DOCUMENT IS SUBJECT TO CHANGE WITHOUT NOTICE. THE PRODUCTS DESCRIBED HEREIN AND THIS DOCUMENT ARE SUBJECT TO SPECIFIC DISCLAIMERS, SET FORTH AT www.vishay.com/doc?91000

REEL SPECIFICATIONS

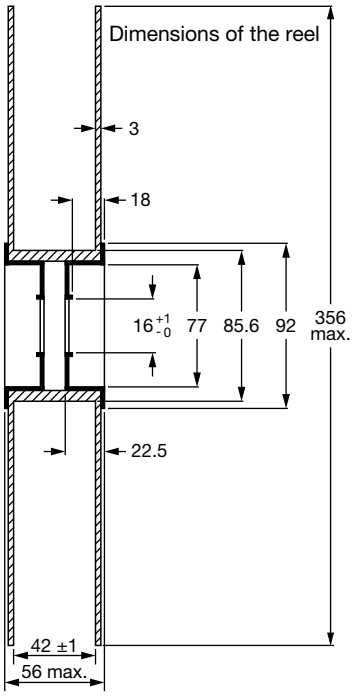

PART NUMBERS AND PACKAGING		
PACKING METHOD	**PART NUMBERS**	**QUANTITY**
Bulk	**NTCLE100E3....B0(A)**	500
Tape and reel 1E pitch	**NTCLE100E3....T1(A)**	1500 per reel, 2 reels per box
Tape and reel 2E pitch	**NTCLE100E3....T2(A)**	1500 per reel, 2 reels per box

CHARACTERISTICS OF TAPED PRODUCTS

Minimum pull-out force of the component: 5 N

Minimum peel-off force of adhesive tape: 6 N

Minimum tearing force tape: 15 N

Minimum pull-off force of tape-reel: 5 N

STORAGE CONDITIONS

Storage temperature range: -25 °C to +40 °C

Maximum relative humidity: 80 %, non-condensing

TESTS AND REQUIREMENTS

Tests are carried out in accordance with IEC 60068-2 and IEC 60539-1.

STABILITY TESTS			
IEC 60068-2 TEST METHOD	**TEST**	**PROCEDURE**	**REQUIREMENTS**
	Endurance	25 °C; 1000 h	$\Delta R/R < 1$ %
1	Endurance	-40 °C; 1000 h	$\Delta R/R < 1$ %
60539 (5.25.4)	Endurance	500 mW; 55 °C; 1000 h	$\Delta R/R < 3$ % (1)
2	Dry heat, (steady state)	125 °C; 1000 h	$\Delta R/R < 3$ %
78	Damp heat (steady state)	56 days at 40 °C; 90 % to 95 % RH	$\Delta R/R < 3$ %
14	Rapid change of temperature	-40 °C to +125 °C; 50 cycles	$\Delta R/R < 2$ %
Other applicable tests			
21	Robustness of leads: Tensile strength Bending	 Loading force 10 N Loading force 5 N	$\Delta R/R \leq 1$ %
58	Soldering: Solderability Resistance to heat	 240 °C max.; duration 4 s max. 265 °C max.; duration 5 s max.	$\Delta R/R \leq 1$ % (2)
27	Impact	Free fall; 1 m	$\Delta R/R \leq 1$ %
29	Shock	490 m/s; half sinewave	$\Delta R/R \leq 1$ %
45	Resistance to solvent (isopropanol)	Ambient temp for 5 minutes; 5 N with hydrophylic cotton wool	No traces of lacquer on cotton wool
6	Vibration	1.5 mm peak to peak: 10 Hz to 58 Hz 10 *g*: 50 Hz to 500 Hz 1 octave/min. 2 h in each direction in three orthogonal directions	No visible damage $\Delta R/R < 1$ %
60695-2-2	Inflammability	1980, needle flame test	Non-flammable

Notes

(1) For $R_{25} \geq 100$ kΩ the drift requirement is $\Delta R/R < 5$ %

(2) For R_{25} from 2.2 kΩ to 10 kΩ, requirement is ± 2 % max.

For technical questions, contact: nlr@vishay.com

THIS DOCUMENT IS SUBJECT TO CHANGE WITHOUT NOTICE. THE PRODUCTS DESCRIBED HEREIN AND THIS DOCUMENT ARE SUBJECT TO SPECIFIC DISCLAIMERS, SET FORTH AT www.vishay.com/doc?91000

Disclaimer

ALL PRODUCT, PRODUCT SPECIFICATIONS AND DATA ARE SUBJECT TO CHANGE WITHOUT NOTICE TO IMPROVE RELIABILITY, FUNCTION OR DESIGN OR OTHERWISE.

Vishay Intertechnology, Inc., its affiliates, agents, and employees, and all persons acting on its or their behalf (collectively, “Vishay”), disclaim any and all liability for any errors, inaccuracies or incompleteness contained in any datasheet or in any other disclosure relating to any product.

Vishay makes no warranty, representation or guarantee regarding the suitability of the products for any particular purpose or the continuing production of any product. To the maximum extent permitted by applicable law, Vishay disclaims (i) any and all liability arising out of the application or use of any product, (ii) any and all liability, including without limitation special, consequential or incidental damages, and (iii) any and all implied warranties, including warranties of fitness for particular purpose, non-infringement and merchantability.

Statements regarding the suitability of products for certain types of applications are based on Vishay's knowledge of typical requirements that are often placed on Vishay products in generic applications. Such statements are not binding statements about the suitability of products for a particular application. It is the customer's responsibility to validate that a particular product with the properties described in the product specification is suitable for use in a particular application. Parameters provided in datasheets and / or specifications may vary in different applications and performance may vary over time. All operating parameters, including typical parameters, must be validated for each customer application by the customer's technical experts. Product specifications do not expand or otherwise modify Vishay's terms and conditions of purchase, including but not limited to the warranty expressed therein.

Hyperlinks included in this datasheet may direct users to third-party websites. These links are provided as a convenience and for informational purposes only. Inclusion of these hyperlinks does not constitute an endorsement or an approval by Vishay of any of the products, services or opinions of the corporation, organization or individual associated with the third-party website. Vishay disclaims any and all liability and bears no responsibility for the accuracy, legality or content of the third-party website or for that of subsequent links.

Except as expressly indicated in writing, Vishay products are not designed for use in medical, life-saving, or life-sustaining applications or for any other application in which the failure of the Vishay product could result in personal injury or death. Customers using or selling Vishay products not expressly indicated for use in such applications do so at their own risk. Please contact authorized Vishay personnel to obtain written terms and conditions regarding products designed for such applications.

No license, express or implied, by estoppel or otherwise, to any intellectual property rights is granted by this document or by any conduct of Vishay. Product names and markings noted herein may be trademarks of their respective owners.

© 2024 VISHAY INTERTECHNOLOGY, INC. ALL RIGHTS RESERVED