Displacement Sensor, Ultraflat Industrial Potentiometer Membrane

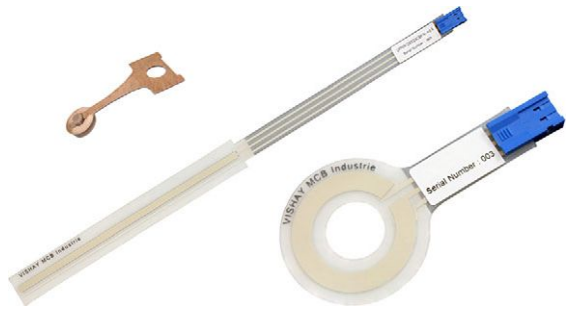

FEATURES

- Sealed IP66
- Infinite resolution
- High integration capacity
- Durability
- Rectilinear: UIPMA type
- Rotational: UIPMC type
- Material categorization: for definitions of compliance please see www.vishay.com/doc?99912

Pb-free
RoHS COMPLIANT

LINKS TO ADDITIONAL RESOURCES

3D Models | Videos | Application Notes

QUICK REFERENCE DATA	
Sensor type	LINEAR or ROTATIONAL, conductive plastic
Output type	Output by connector
Market appliance	Industrial
Dimensions	4 mm (thickness max.)

ELECTRICAL SPECIFICATIONS

PARAMETER	UIPMA	UIPMC
Total resistance (R_n)	4.7 kΩ	10 kΩ
Tolerance on R_n	± 30 %	
Dissipation	≤ 0.1 W/cm of travel (1)	≤ 1 W to 70 °C
Theoretical electrical travel (TET)	20 mm to 250 mm (1)	312°
Tolerance on TET	± 1 mm	± 3°
Useful electrical travel (UET)	TET - 2 mm	306°
Electrical continuity travel (ECT)	TET + 4 mm	325°
Linearity	± 2 % (2)	± 5 %
Temperature coefficient	-300 ppm/°C ± 300 ppm/°C	
Collector / track current (I_c)	≤ 1 mA	
Recommended current I_c	≤ 100 µA	
Recommended load impedance	≥ 100 R_n	
Output smoothness	< 0.1 % (NFC 93 255)	

Notes

(1) See “Specific UIPMA Characteristics” table

(2) Better accuracy on request

MECHANICAL SPECIFICATIONS

PARAMETER	UIPMA	UIPMC
Design	Flexible insulating films	Flexible insulating films
Mechanical travel	Electrical continuity travel	Electrical continuity travel
Backlash	< 0.1 mm	< 0.3°
Mounting	With double-sided adhesive on flat, clean, and dry support	
Speed displacement	≤ 1.5 m/s	
Drive	Force ≥ 0.3 N	Torque ≥ 1 N cm
Protection class (NFC 20 010)	IP66 (electrical connection and plug excluded)	
Maximum alignment fault	± 1 mm	-

PERFORMANCE

PARAMETER	UIPMA	UIPMC
Life	> 3M cycles (depending on chosen wiper)	
Operating temperature range	-10 °C to +50 °C	
Storage temperature range	-40 °C to +50 °C	
Support	Flat, clean, and dry	

Note

- Nothing stated herein shall be construed as a guarantee of quality or durability

For technical questions, contact: mcbprecisionpot@vishay.com

THIS DOCUMENT IS SUBJECT TO CHANGE WITHOUT NOTICE. THE PRODUCTS DESCRIBED HEREIN AND THIS DOCUMENT ARE SUBJECT TO SPECIFIC DISCLAIMERS, SET FORTH AT www.vishay.com/doc?91000

SAP PART NUMBERING GUIDELINES - UIPM

MODEL	TYPE	UIPMA: THEORETICAL ELECTRICAL TRAVEL (mm) UIPMC: EXTERNAL DIAMETER (mm)	TYPE	VALUE	LINEARITY	LEADS	PACKAGING
UIPM	A = linear	050 100 150 200 250	I = industrial	472 = 4K7	X = ± 2 %	C = connector	B = bulk
UIPM	C = rotational	030	I = industrial	103 = 10K	U	C = connector	B = bulk

ACCESSORY WIPER

Wiper type A	ACCSUIPMWIPERKB434
Wiper type B	ACCSUFPMWIPERKB422
Wiper type D	ACCSUIPMWIPERKB435 (packaging 10 pcs)
	ACCSUIPMWIPERKG435 (packaging 100 pcs)

CONNECTIONS

Connector Berg Duflex 67.013.003, contacts 76.785.301
The connector of UIPMA / UIPMC is intended for use with Berg terminal ref. 76785-YXX and Berg headers ref. 76384-YXX or 76382-YXX

DIMENSIONS in millimeters

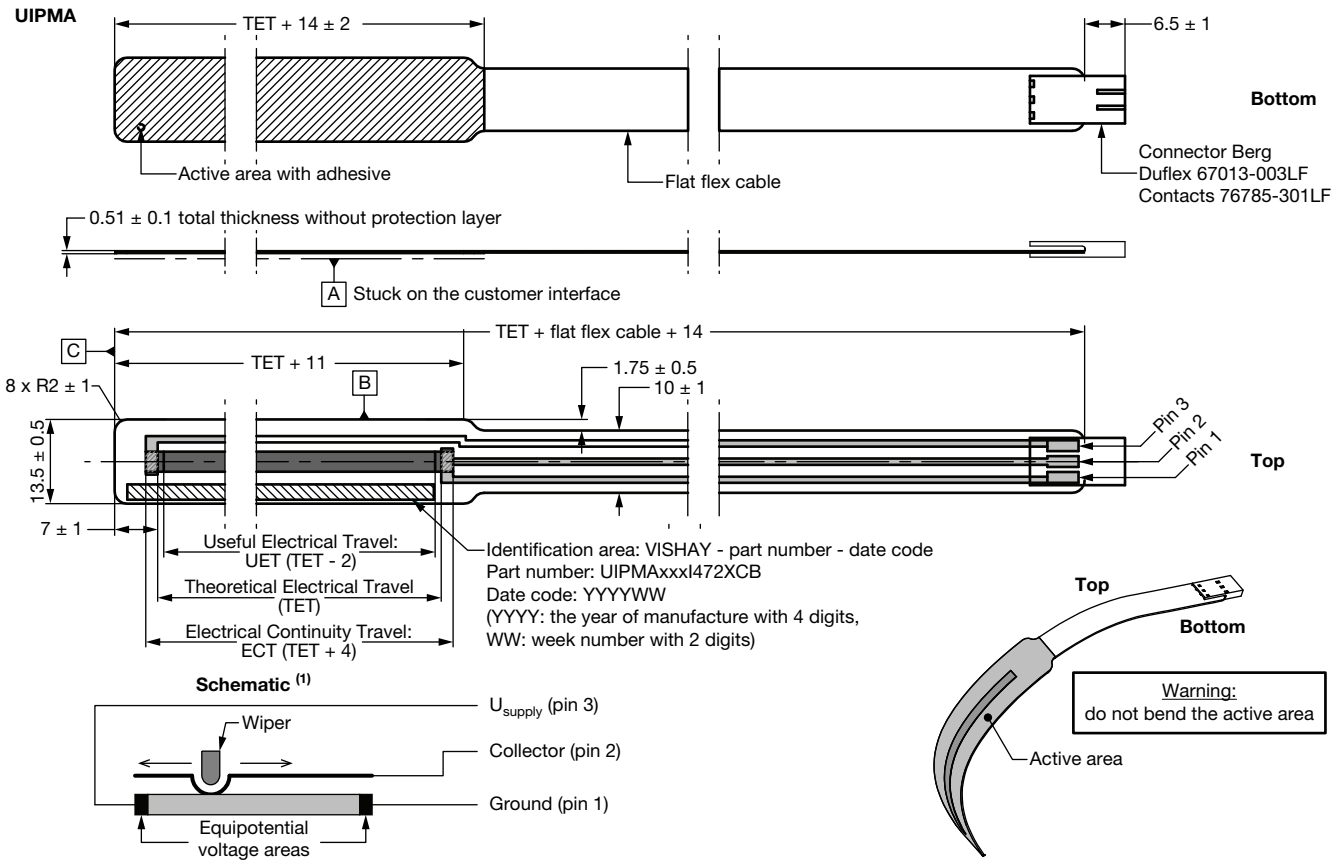

TET (mm)	FLAT FLEX CABLE (mm)
50	100
100	50
150	100
200	100
250	50

Notes

- Tolerancing according to ISO 8015
- General tolerances according to ISO 2768 - mK

(1) Ground and U_{supply} can be swapped to change the slope sign

For technical questions, contact: mcbprecisionpot@vishay.com
THIS DOCUMENT IS SUBJECT TO CHANGE WITHOUT NOTICE. THE PRODUCTS DESCRIBED HEREIN AND THIS DOCUMENT ARE SUBJECT TO SPECIFIC DISCLAIMERS, SET FORTH AT www.vishay.com/doc?91000

MOUNTING REQUIREMENTS FOR UIPMA

1. The shape of the customer interface over the active area shall be: ▱ 0.05
2. The roughness of the customer interface over the active area shall be: √Ra 1.6
3. Before sticking the sensor, the interface surface shall be free of all traces of dirt, grease, foreign objects, and burrs.
4. The bending of the flat flex cable shall be: Ø 3 mm min.

DIMENSIONS in millimeters

UIPMC

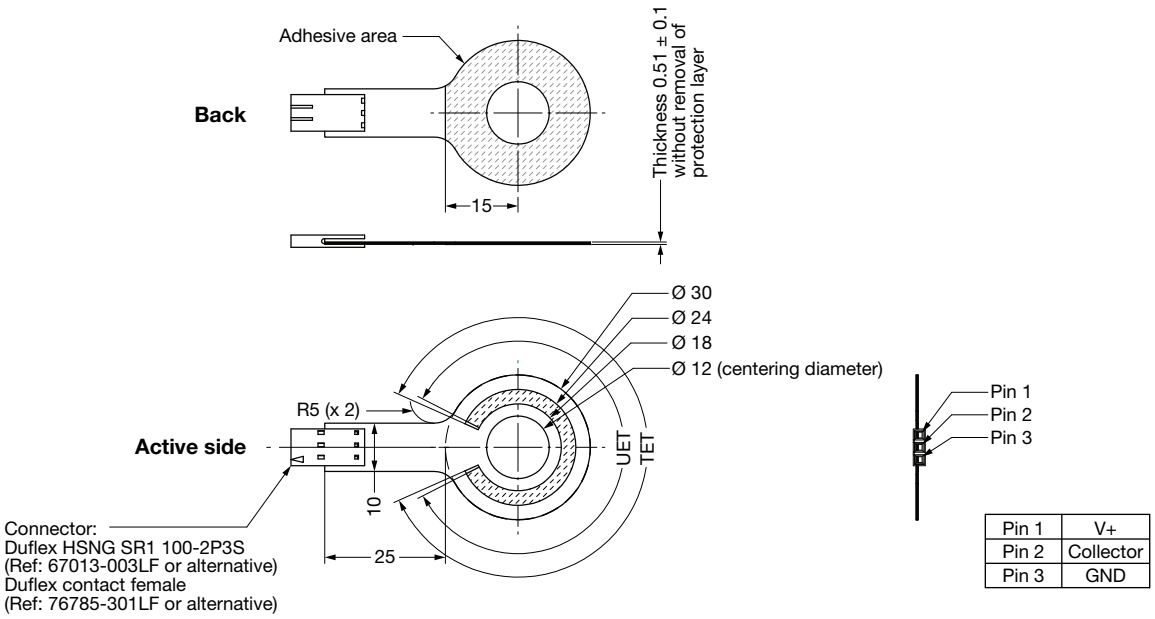

Pin 1	V+
Pin 2	Collector
Pin 3	GND

ELECTRICAL DIAGRAM

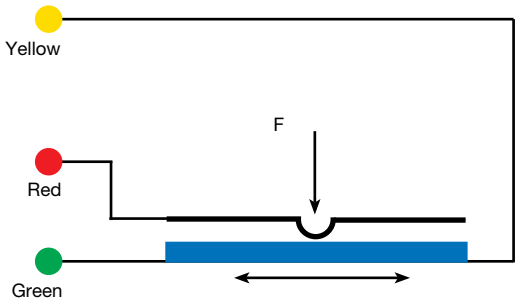

The voltage varies according to the position of the presser on the deformable membrane.

SPECIFIC VERSIONS (on request)

- Other electrical or mechanical characteristics
- Other bases
- Integration in equipment
- Other versions: outdoor design, ...
- Integration in equipment
  (flat flex cable, contacts, wires, ...)

For technical questions, contact: mcbprecisionpot@vishay.com

THIS DOCUMENT IS SUBJECT TO CHANGE WITHOUT NOTICE. THE PRODUCTS DESCRIBED HEREIN AND THIS DOCUMENT ARE SUBJECT TO SPECIFIC DISCLAIMERS, SET FORTH AT www.vishay.com/doc?91000

PRESSERS

Wiper Type A

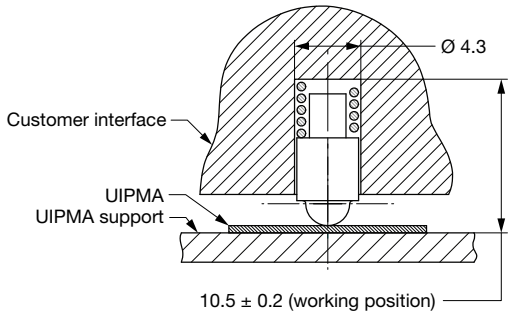

Endurance life = 3M cycles

Wiper Type B

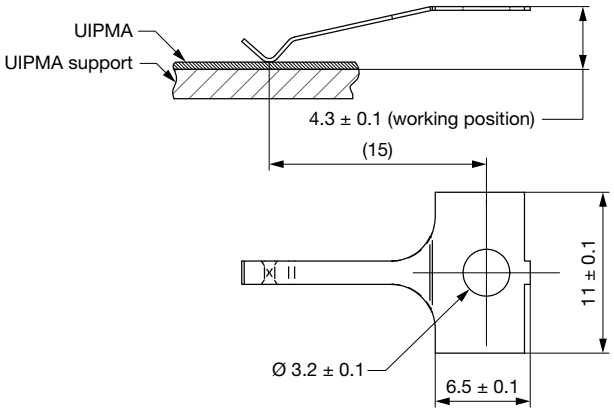

Endurance life = 100 000 cycles

Wiper Type D (Endurance Life = 3M cycles)

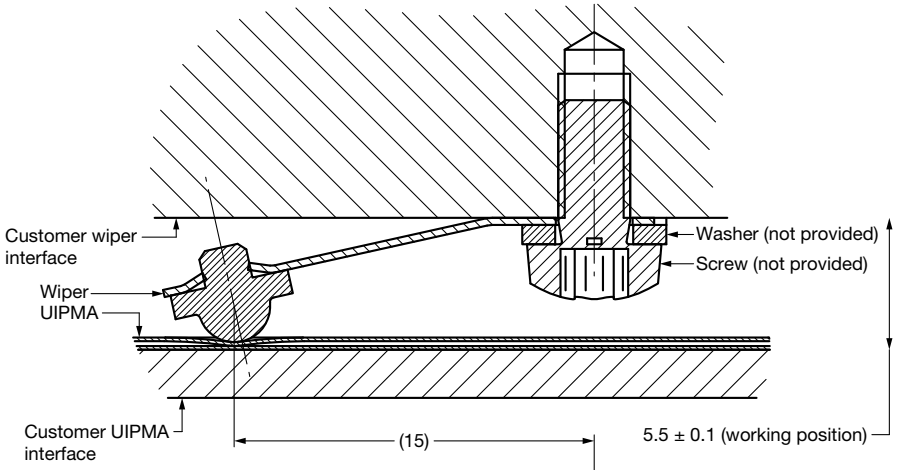

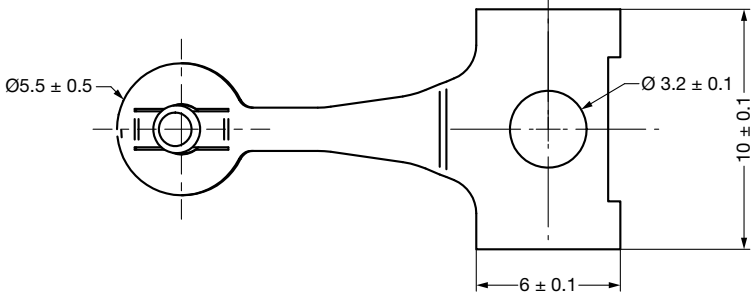

For technical questions, contact: mcbprecisionpot@vishay.com
THIS DOCUMENT IS SUBJECT TO CHANGE WITHOUT NOTICE. THE PRODUCTS DESCRIBED HEREIN AND THIS DOCUMENT ARE SUBJECT TO SPECIFIC DISCLAIMERS, SET FORTH AT www.vishay.com/doc?91000

SPECIFIC UIPMA CHARACTERISTICS			
THEORETICAL ELECTRICAL TRAVEL (TET) (mm)	DISSIPATION AT +40 °C (W)	ELECTRICAL CONTINUITY TRAVEL (ECT) (mm)	FILM LENGTH (mm)
50	≤ 0.5	54	75
100	≤ 1.0	104	125
150	≤ 1.5	154	175
200	≤ 2.0	204	225
250	≤ 2.5	254	275

OPERATING DESCRIPTION

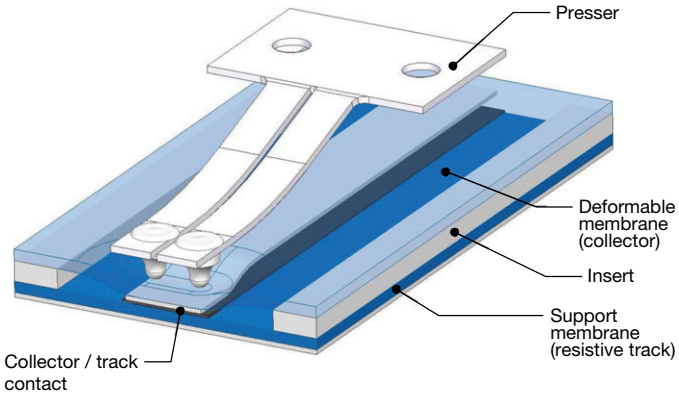

ON REQUEST

UIPMA034 WITH WIRES OUTPUT

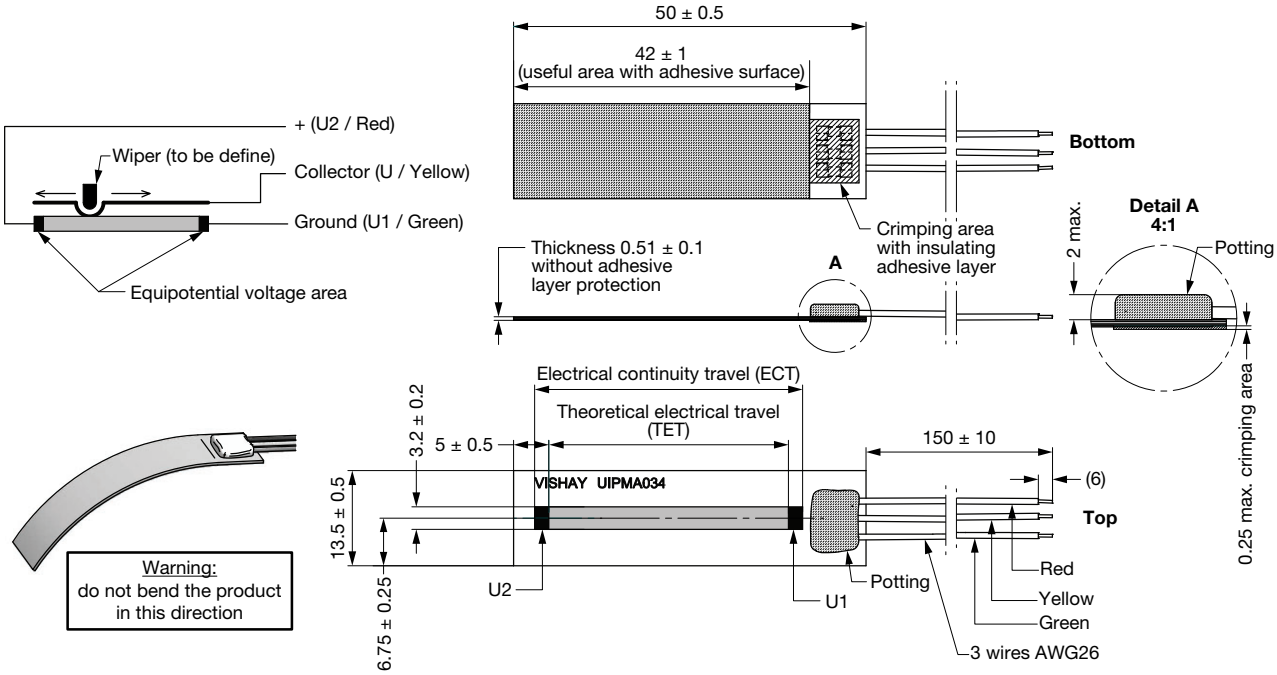

For technical questions, contact: mcbprecisionpot@vishay.com
THIS DOCUMENT IS SUBJECT TO CHANGE WITHOUT NOTICE. THE PRODUCTS DESCRIBED HEREIN AND THIS DOCUMENT ARE SUBJECT TO SPECIFIC DISCLAIMERS, SET FORTH AT www.vishay.com/doc?91000

ON REQUEST

UIPMA135 WITH WIRES OUTPUT

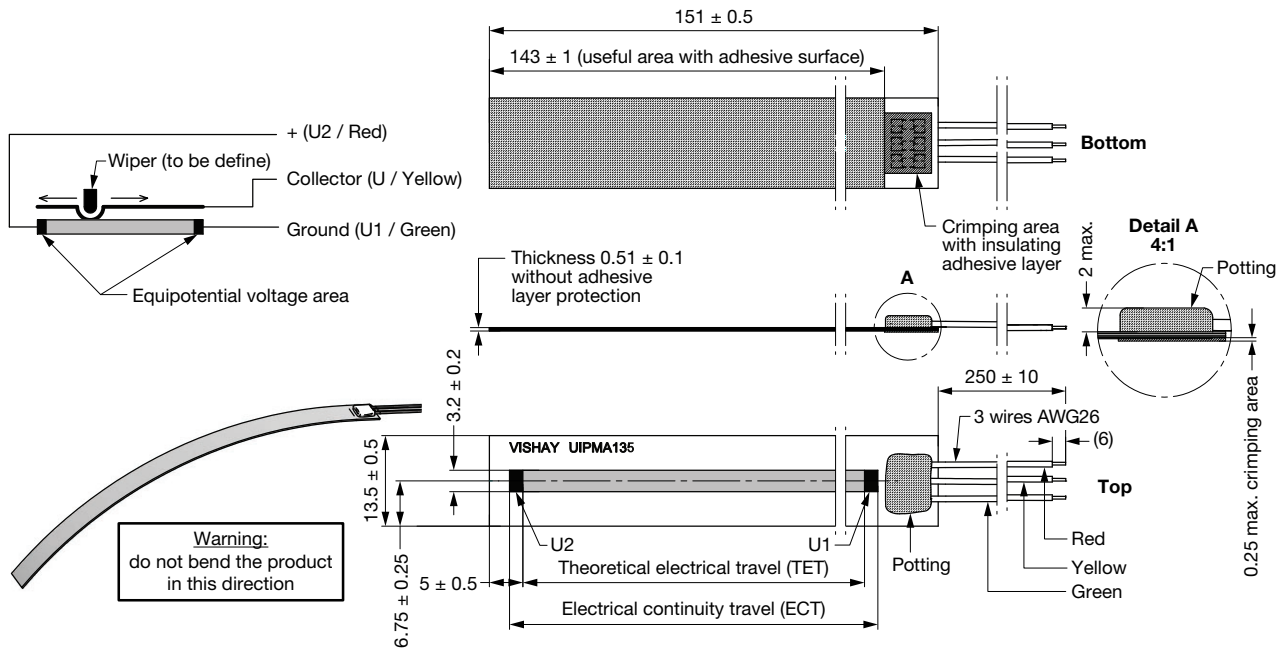

For technical questions, contact: mcbprecisionpot@vishay.com
THIS DOCUMENT IS SUBJECT TO CHANGE WITHOUT NOTICE. THE PRODUCTS DESCRIBED HEREIN AND THIS DOCUMENT ARE SUBJECT TO SPECIFIC DISCLAIMERS, SET FORTH AT www.vishay.com/doc?91000

Disclaimer

ALL PRODUCT, PRODUCT SPECIFICATIONS AND DATA ARE SUBJECT TO CHANGE WITHOUT NOTICE TO IMPROVE RELIABILITY, FUNCTION OR DESIGN OR OTHERWISE.

Vishay Intertechnology, Inc., its affiliates, agents, and employees, and all persons acting on its or their behalf (collectively, “Vishay”), disclaim any and all liability for any errors, inaccuracies or incompleteness contained in any datasheet or in any other disclosure relating to any product.

Vishay makes no warranty, representation or guarantee regarding the suitability of the products for any particular purpose or the continuing production of any product. To the maximum extent permitted by applicable law, Vishay disclaims (i) any and all liability arising out of the application or use of any product, (ii) any and all liability, including without limitation special, consequential or incidental damages, and (iii) any and all implied warranties, including warranties of fitness for particular purpose, non-infringement and merchantability.

Statements regarding the suitability of products for certain types of applications are based on Vishay's knowledge of typical requirements that are often placed on Vishay products in generic applications. Such statements are not binding statements about the suitability of products for a particular application. It is the customer's responsibility to validate that a particular product with the properties described in the product specification is suitable for use in a particular application. Parameters provided in datasheets and / or specifications may vary in different applications and performance may vary over time. All operating parameters, including typical parameters, must be validated for each customer application by the customer's technical experts. Product specifications do not expand or otherwise modify Vishay's terms and conditions of purchase, including but not limited to the warranty expressed therein.

Hyperlinks included in this datasheet may direct users to third-party websites. These links are provided as a convenience and for informational purposes only. Inclusion of these hyperlinks does not constitute an endorsement or an approval by Vishay of any of the products, services or opinions of the corporation, organization or individual associated with the third-party website. Vishay disclaims any and all liability and bears no responsibility for the accuracy, legality or content of the third-party website or for that of subsequent links.

Except as expressly indicated in writing, Vishay products are not designed for use in medical, life-saving, or life-sustaining applications or for any other application in which the failure of the Vishay product could result in personal injury or death. Customers using or selling Vishay products not expressly indicated for use in such applications do so at their own risk. Please contact authorized Vishay personnel to obtain written terms and conditions regarding products designed for such applications.

No license, express or implied, by estoppel or otherwise, to any intellectual property rights is granted by this document or by any conduct of Vishay. Product names and markings noted herein may be trademarks of their respective owners.

© 2024 VISHAY INTERTECHNOLOGY, INC. ALL RIGHTS RESERVED