12.5 mm Square Modular Single-Turn Cermet Trimmer

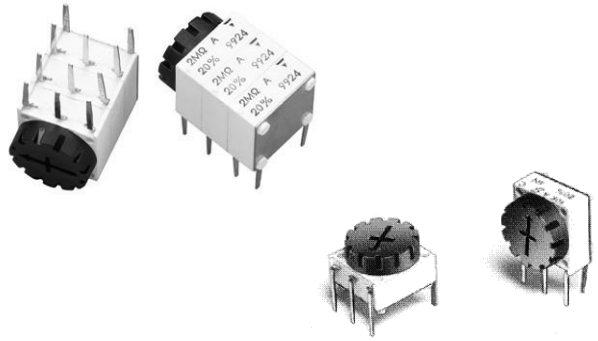

FEATURES

- Knob included
- 0.5 W at 70 °C
- Industrial grade
- Up to 5 modules
- Switches and detents available
- Tests according to CECC 41000 or IEC 60393-1
- Available in conductive plastic
- High rotational life up to 2000 cycles
- X and Y styles
- Material categorization: for definitions of compliance please see www.vishay.com/doc?99912

RoHS COMPLIANT

DIMENSIONS in millimeters (± 0.5 mm)

T11X

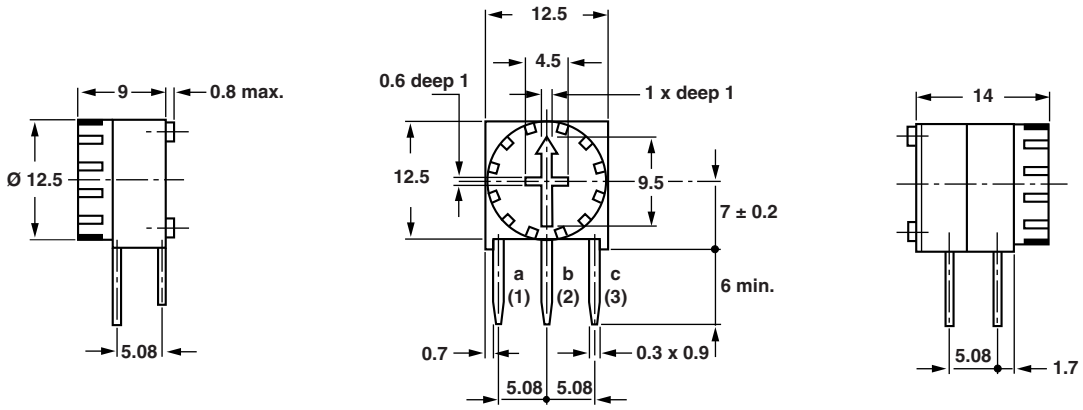

T11Y

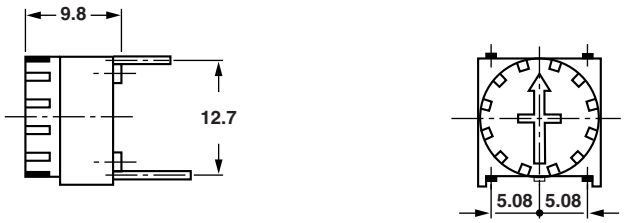

For technical questions, contact: sferpottrimmers@vishay.com

THIS DOCUMENT IS SUBJECT TO CHANGE WITHOUT NOTICE. THE PRODUCTS DESCRIBED HEREIN AND THIS DOCUMENT ARE SUBJECT TO SPECIFIC DISCLAIMERS, SET FORTH AT www.vishay.com/doc?91000

ELECTRICAL SPECIFICATIONS		
Resistive element		Cermet
Electrical travel		270° ± 10°
Resistance range		22 Ω to 4.7 MΩ
Standard series E3		1 - 2.2 - 4.7 and on request 1 - 2 - 5
Tolerance	Standard	± 20 %
	On request	± 5 % or ± 10 %
Power rating	Linear	0.5 W at +70 °C
	Logarithmic laws, L, F, or S and ganged elements	0.25 W at +70 °C
Power rating chart		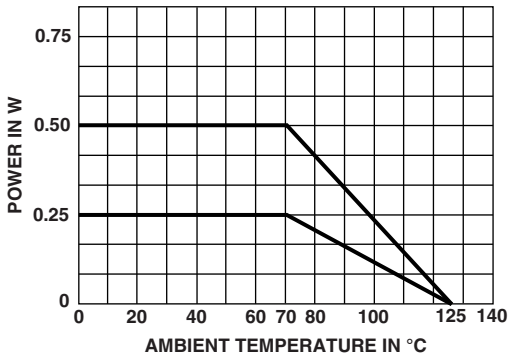
Circuit diagram		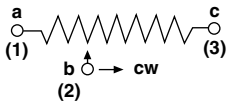
Resistance laws		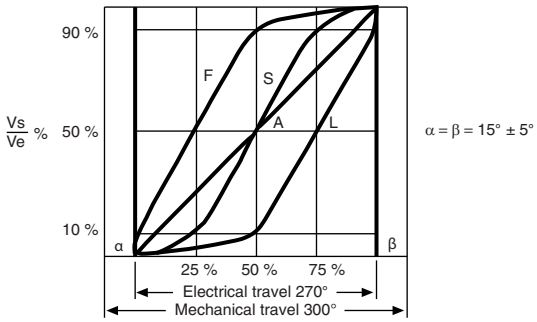
Temperature coefficient (for $R_n \geq 100\ \Omega$) (typical)		± 100 ppm/°C
Limiting element voltage		350 V
Contact resistance variation		2 % Rn or 3 Ω (linear law)
End resistance (typical)		2 Ω
Independent linearity (typical)		± 3 % (linear law)
Middle keying point (C V1M typical)		± 3 %
Insulation resistance		10^6 MΩ (500 V_{DC})
Dielectric strength (RMS)		1500 V_{RMS}

MECHANICAL SPECIFICATIONS	
Mechanical travel	300° ± 5°
End stop torque (max. Ncm)	35
Mechanical life	2000 cycles
Terminals	Pure Sn (code e3)

Note

- Nothing stated herein shall be construed as a guarantee of quality or durability

For technical questions, contact: sferpottrimmers@vishay.com

THIS DOCUMENT IS SUBJECT TO CHANGE WITHOUT NOTICE. THE PRODUCTS DESCRIBED HEREIN AND THIS DOCUMENT ARE SUBJECT TO SPECIFIC DISCLAIMERS, SET FORTH AT www.vishay.com/doc?91000

ENVIRONMENTAL SPECIFICATIONS

Temperature range	-55 °C to +125 °C
Climatic category	55/125/56
Sealing	Enables cleaning IP64

MARKING

- Vishay trademark
- Model
- SAP code of ohmic value
- Tolerance (in %)
- Manufacturing date (4 digits)
- Marking of terminal 3

PACKAGING

Style Y

- Carton box of 45 pieces, code B24/BO45

Style X

- Carton box of 80 pieces, code B28/BO80

ORDERING INFORMATION (part number)

T	1	1	X	4	7	0	M	A	B	2	8				

Model	STYLE	OHMIC VALUE	TOLERANCE	TAPER	PACKAGING	SPECIAL NUMBER
T11	**X** **Y**	From 22 Ω to 4.7 MΩ **103** = 10 kΩ	M = 20 % On request **K** = 10 % **J** = 5 %	**A** **L** **F** **S**	Style X **B28** = box 80 pieces Style Y **B24** = box 45 pieces	(If applicable) Given by Vishay for custom design

DESCRIPTION (for information only)

T11	X	470U	20 %	A		BO	e3
MODEL	STYLE	VALUE	TOLERANCE	TAPER	SPECIAL	PACKAGING	LEAD FINISH

RELATED DOCUMENTS

APPLICATION NOTES	
Potentiometers and Trimmers	www.vishay.com/doc?51001
Guidelines for Vishay Sfernice Resistive and Inductive Components	www.vishay.com/doc?52029

For technical questions, contact: sferpottrimmers@vishay.com
THIS DOCUMENT IS SUBJECT TO CHANGE WITHOUT NOTICE. THE PRODUCTS DESCRIBED HEREIN AND THIS DOCUMENT ARE SUBJECT TO SPECIFIC DISCLAIMERS, SET FORTH AT www.vishay.com/doc?91000

Disclaimer

ALL PRODUCT, PRODUCT SPECIFICATIONS AND DATA ARE SUBJECT TO CHANGE WITHOUT NOTICE TO IMPROVE RELIABILITY, FUNCTION OR DESIGN OR OTHERWISE.

Vishay Intertechnology, Inc., its affiliates, agents, and employees, and all persons acting on its or their behalf (collectively, “Vishay”), disclaim any and all liability for any errors, inaccuracies or incompleteness contained in any datasheet or in any other disclosure relating to any product.

Vishay makes no warranty, representation or guarantee regarding the suitability of the products for any particular purpose or the continuing production of any product. To the maximum extent permitted by applicable law, Vishay disclaims (i) any and all liability arising out of the application or use of any product, (ii) any and all liability, including without limitation special, consequential or incidental damages, and (iii) any and all implied warranties, including warranties of fitness for particular purpose, non-infringement and merchantability.

Statements regarding the suitability of products for certain types of applications are based on Vishay's knowledge of typical requirements that are often placed on Vishay products in generic applications. Such statements are not binding statements about the suitability of products for a particular application. It is the customer's responsibility to validate that a particular product with the properties described in the product specification is suitable for use in a particular application. Parameters provided in datasheets and / or specifications may vary in different applications and performance may vary over time. All operating parameters, including typical parameters, must be validated for each customer application by the customer's technical experts. Product specifications do not expand or otherwise modify Vishay's terms and conditions of purchase, including but not limited to the warranty expressed therein.

Hyperlinks included in this datasheet may direct users to third-party websites. These links are provided as a convenience and for informational purposes only. Inclusion of these hyperlinks does not constitute an endorsement or an approval by Vishay of any of the products, services or opinions of the corporation, organization or individual associated with the third-party website. Vishay disclaims any and all liability and bears no responsibility for the accuracy, legality or content of the third-party website or for that of subsequent links.

Except as expressly indicated in writing, Vishay products are not designed for use in medical, life-saving, or life-sustaining applications or for any other application in which the failure of the Vishay product could result in personal injury or death. Customers using or selling Vishay products not expressly indicated for use in such applications do so at their own risk. Please contact authorized Vishay personnel to obtain written terms and conditions regarding products designed for such applications.

No license, express or implied, by estoppel or otherwise, to any intellectual property rights is granted by this document or by any conduct of Vishay. Product names and markings noted herein may be trademarks of their respective owners.

© 2024 VISHAY INTERTECHNOLOGY, INC. ALL RIGHTS RESERVED