Full 360° Smart Sensor (Hall Effect Technology)

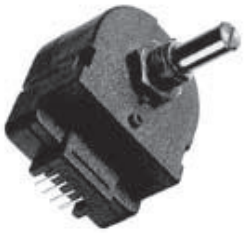

FEATURES

- Absolute ratiometric output over 360° range with no dead band
- Self-contained package not requiring external electronic interface
- Contactless technology
- Reverse polarity protection
- Non volatile positioning output
- Material categorization: For definitions of compliance please see www.vishay.com/doc?99912

RoHS COMPLIANT

QUICK REFERENCE DATA	
Sensor type	ROTATIONAL, single turn hall effect
Output type	Output by pins (connector)
Market appliance	Industrial
Dimensions	33 mm x 44 mm x 20 mm

The model 601-HE represents a new generation of smart sensors in contactless technology based on the hall effect principle. This unique electronic device is a self-contained package which provides an analog electrical output over a full 360° without the need of external electronics. The low power consumption and non-volatile output makes this universal sensor the real cost-effective alternative to encoders.

STANDARD ELECTRICAL SPECIFICATIONS	
PARAMETER	
Supply	4.5 V_{DC} to 5.5 V_{DC}
Supply current	16 mA max.
Over voltage protection	10 V
Independent linearity	± 1 %
Electrical track	360° continuous
Analog voltage output	5 % to 95 % of supply (ratiometric) CW or CCW see graphs on next page
Output ramp slope	Electrically switchable - see graphs
Temperature coefficient	$V_{out}/\Delta T$ 125 µV/°C typ.
Hysteresis static	0.8° max.

MECHANICAL SPECIFICATIONS	
Rotation	360° continuous
Rotational speed (max.)	120 RPM
Operating torque max.	0.25 oz.-in (18 g-cm)
Weight	30 g

ENVIRONMENTAL SPECIFICATIONS	
Operating life	5 000 000 Cycles
Operating temperature range	- 45 °C to + 85 °C
Storage temperature range	- 45 °C to + 85 °C
Sealing	IP54

ORDERING INFORMATION/DESCRIPTION

601 HE	0000	BO1	e4
MODEL	CONFIGURATION CODE	PACKAGING	LEAD FINISH
		Box of 1 piece	

Product Number	Ø 1.57 PIN	Ø 3.18 PIN
0000	Yes	Yes
0001	Yes	-
0002	-	Yes
0003	-	-

SAP PART NUMBERING GUIDELINES

601 HE	0001	B01
MODEL	PIN CONFIGURATION	PACKAGING

For technical questions, contact: sferprecisionpot@vishay.com
THIS DOCUMENT IS SUBJECT TO CHANGE WITHOUT NOTICE. THE PRODUCTS DESCRIBED HEREIN AND THIS DOCUMENT ARE SUBJECT TO SPECIFIC DISCLAIMERS, SET FORTH AT www.vishay.com/doc?91000

DIMENSIONS in millimeters

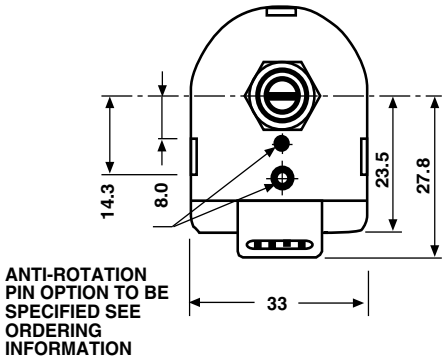

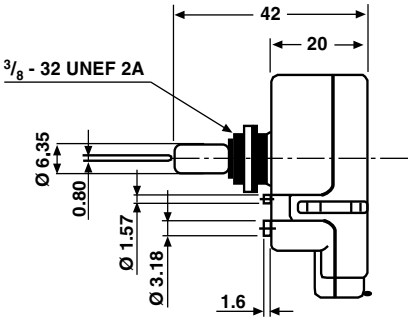

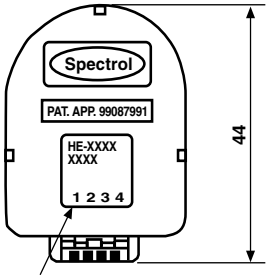

PIN CONNECTIONS		FUNCTION
1	+ 5 V	Supply
2	0 V	
3	Output	O/P voltage
4	Direction	Connected to 0 V: CCW Open circuit or connected to 5 V: CW

MATERIAL SPECIFICATIONS	
Housing	Plastic
Bushing	Brass, nickel plated
Shaft	Stainless steel
Pin terminal connector	Gold plated
Output connection	Pin header to suit IDC connectors. e.g. Panduit C100 - F22 and Molex 7880
Bushing mount hardware lock washer, internal tooth	Steel, nickel plated
Panel nut	Brass, nickel plated

CABLE ASSEMBLY FOR CONNECTION	
Part number	601-1056-0000
Description	Molex KK
	4-way crimp connector
	4 wire (250 mm)

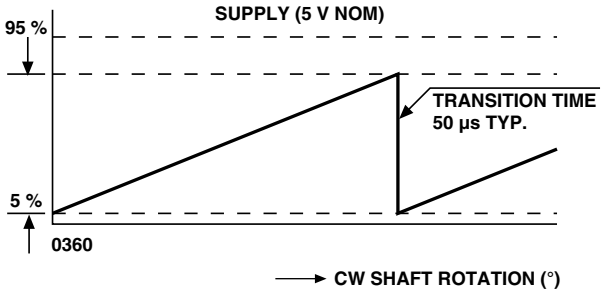

MODEL: 601 HE when pin 4 connected to 5 V or open circuit

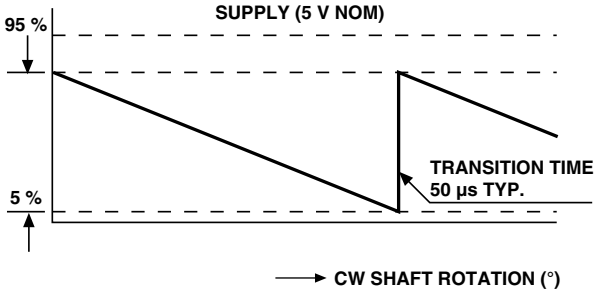

MODEL: 601 HE when pin 4 connected to 0 V

For technical questions, contact: sferprecisionpot@vishay.com

THIS DOCUMENT IS SUBJECT TO CHANGE WITHOUT NOTICE. THE PRODUCTS DESCRIBED HEREIN AND THIS DOCUMENT ARE SUBJECT TO SPECIFIC DISCLAIMERS, SET FORTH AT www.vishay.com/doc?91000

Disclaimer

ALL PRODUCT, PRODUCT SPECIFICATIONS AND DATA ARE SUBJECT TO CHANGE WITHOUT NOTICE TO IMPROVE RELIABILITY, FUNCTION OR DESIGN OR OTHERWISE.

Vishay Intertechnology, Inc., its affiliates, agents, and employees, and all persons acting on its or their behalf (collectively, “Vishay”), disclaim any and all liability for any errors, inaccuracies or incompleteness contained in any datasheet or in any other disclosure relating to any product.

Vishay makes no warranty, representation or guarantee regarding the suitability of the products for any particular purpose or the continuing production of any product. To the maximum extent permitted by applicable law, Vishay disclaims (i) any and all liability arising out of the application or use of any product, (ii) any and all liability, including without limitation special, consequential or incidental damages, and (iii) any and all implied warranties, including warranties of fitness for particular purpose, non-infringement and merchantability.

Statements regarding the suitability of products for certain types of applications are based on Vishay's knowledge of typical requirements that are often placed on Vishay products in generic applications. Such statements are not binding statements about the suitability of products for a particular application. It is the customer's responsibility to validate that a particular product with the properties described in the product specification is suitable for use in a particular application. Parameters provided in datasheets and / or specifications may vary in different applications and performance may vary over time. All operating parameters, including typical parameters, must be validated for each customer application by the customer's technical experts. Product specifications do not expand or otherwise modify Vishay's terms and conditions of purchase, including but not limited to the warranty expressed therein.

Hyperlinks included in this datasheet may direct users to third-party websites. These links are provided as a convenience and for informational purposes only. Inclusion of these hyperlinks does not constitute an endorsement or an approval by Vishay of any of the products, services or opinions of the corporation, organization or individual associated with the third-party website. Vishay disclaims any and all liability and bears no responsibility for the accuracy, legality or content of the third-party website or for that of subsequent links.

Except as expressly indicated in writing, Vishay products are not designed for use in medical, life-saving, or life-sustaining applications or for any other application in which the failure of the Vishay product could result in personal injury or death. Customers using or selling Vishay products not expressly indicated for use in such applications do so at their own risk. Please contact authorized Vishay personnel to obtain written terms and conditions regarding products designed for such applications.

No license, express or implied, by estoppel or otherwise, to any intellectual property rights is granted by this document or by any conduct of Vishay. Product names and markings noted herein may be trademarks of their respective owners.

© 2024 VISHAY INTERTECHNOLOGY, INC. ALL RIGHTS RESERVED