UV SMD LED PLCC-2

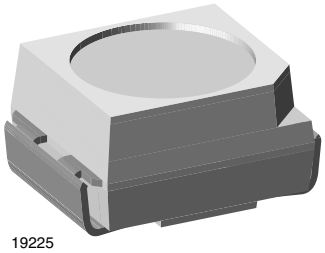
19225

DESCRIPTION

The package of the VLMU3100 series is the PLCC-2. It consists of a lead frame which is embedded in a white thermoplast. The reflector inside this package is filled up with clear silicone which guarantees long life time. The viewing angle is 120°, package dimensions are 3.2 mm x 2.8 mm x 1.9 mm.

PRODUCT GROUP AND PACKAGE DATA

- Product group: LED
- Package: SMD PLCC-2
- Product series: standard
- Angle of half intensity: ± 60°
- Lead-finishing: Ag

FEATURES

- UV SMD LED with exceptional brightness
- High efficient InGaN technology
- Long life time due to silicone casting
- Compatible with automatic placement equipment
- EIA and ICE standard package
- Compatible with IR reflow and vapor phase
- Available in 8 mm tape
- Low profile package
- Non-diffused lens: excellent for coupling to light pipes and backlighting
- Low power consumption
- Preconditioning according to JEDEC® level 2a
- ESD-withstand voltage: up to 1 kV according to JESD22-A114-B
- Material categorization: for definitions of compliance please see www.vishay.com/doc?99912

Pb-free
e3
RoHS COMPLIANT
HALOGEN FREE
GREEN (5-2008)

APPLICATIONS

- Curing of glue and laquer
- Recognition of safety features of money bills

SAFETY ADVICES

Depending on the mode of operation, these devices emit highly concentrated non visible ultraviolet light which can be hazardous to the human eye. Products which incorporate these devices have to follow the safety precautions given in IEC 60825-1 “Safety of Laser Products”.

PARTS TABLE

PART	COLOR	RADIANT INTENSITY (mW/sr)			at I_F (mA)	WAVELENGTH (nm)			at I_F (mA)	FORWARD VOLTAGE (V)			at I_F (mA)	TECHNOLOGY
		MIN.	TYP.	MAX.		MIN.	TYP.	MAX.		MIN.	TYP.	MAX.		
VLMU3100-GS08	Ultraviolet	1.8	2.5	3	20	400	405	410	20	2.8	3.2	3.8	20	InGaN

ABSOLUTE MAXIMUM RATINGS (T_{amb} = 25 °C, unless otherwise specified)
VLMU3100

PARAMETER	TEST CONDITION	SYMBOL	VALUE	UNIT
Forward current		I_F	30	mA
Surge forward current	$t_p \leq 10$ µs	I_{FSM}	0.1	A
Power dissipation		P_{tot}	120	mW
Junction temperature		T_j	+100	°C
Operating temperature range		T_{amb}	-40 to +80	°C
Storage temperature range		T_{stg}	-40 to +100	°C
Solder temperature		T_{sol}	260/5	°C/s

For technical questions, contact: LED@vishay.com
THIS DOCUMENT IS SUBJECT TO CHANGE WITHOUT NOTICE. THE PRODUCTS DESCRIBED HEREIN AND THIS DOCUMENT ARE SUBJECT TO SPECIFIC DISCLAIMERS, SET FORTH AT www.vishay.com/doc?91000

OPTICAL AND ELECTRICAL CHARACTERISTICS (T_{amb} = 25 °C, unless otherwise specified) **VLMU3100, ULTRAVIOLET**						
PARAMETER	**TEST CONDITION**	**SYMBOL**	**MIN.**	**TYP.**	**MAX.**	**UNIT**
Radiant intensity	I_F = 20 mA	I_e	1.8	2.5	3	mW/sr
Radiant power	I_F = 20 mA	ϕ_e	-	6.8	-	mW
Peak wavelength	I_F = 20 mA	λ_p	400	405	410	nm
Angle of half intensity	I_F = 20 mA	φ	-	± 60	-	deg
Forward voltage	I_F = 20 mA	V_F	2.8	3.2	3.8	V
Reverse current	V_R = 5 V	I_R	-	-	10	µA

TYPICAL CHARACTERISTICS (T_{amb} = 25 °C, unless otherwise specified)

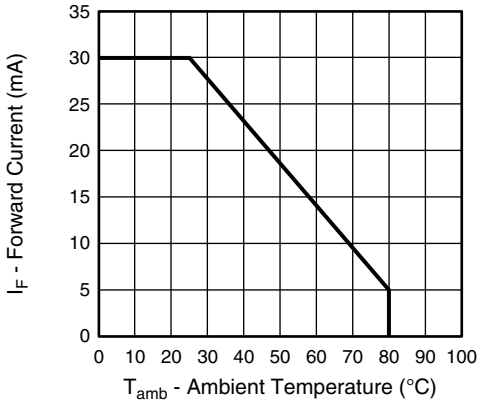

Fig. 1 - Forward Current vs. Ambient Temperature

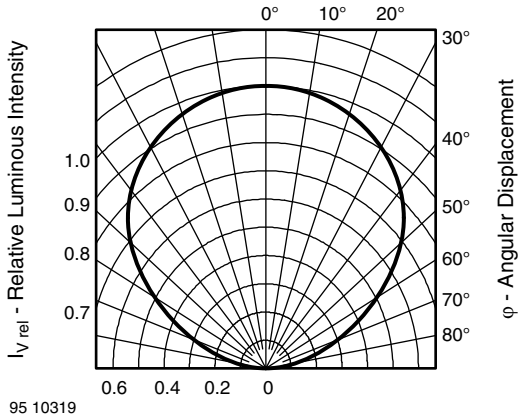

Fig. 3 - Relative Luminous Intensity vs. Angular Displacement

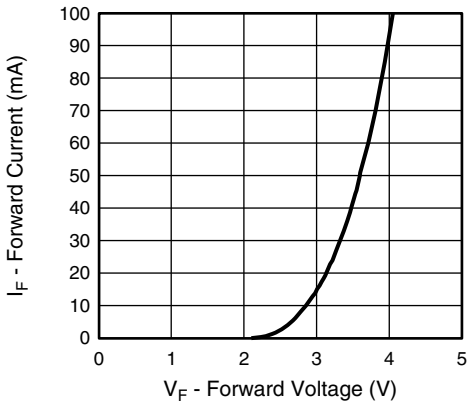

Fig. 2 - Forward Current vs. Forward Voltage

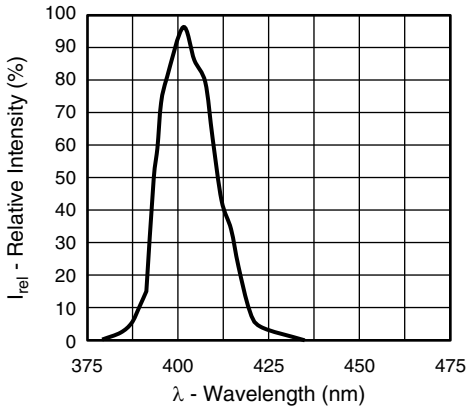

Fig. 4 - Relative Intensity vs. Wavelength

THIS DOCUMENT IS SUBJECT TO CHANGE WITHOUT NOTICE. THE PRODUCTS DESCRIBED HEREIN AND THIS DOCUMENT ARE SUBJECT TO SPECIFIC DISCLAIMERS, SET FORTH AT www.vishay.com/doc?91000

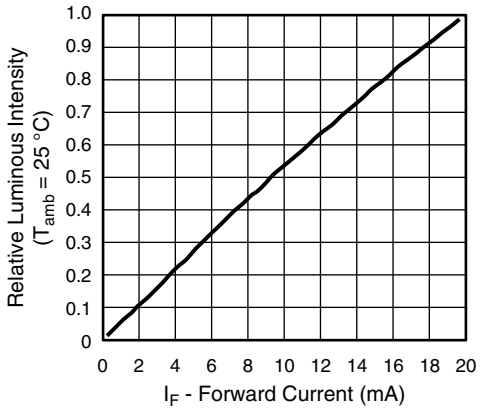

Fig. 5 - Specific Luminous Intensity vs. Forward Current

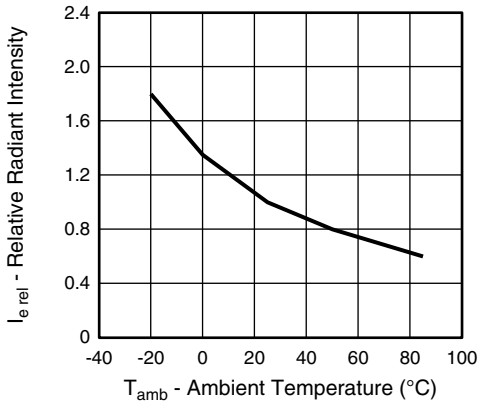

Fig. 6 - Relative Radiant Intensity vs. Ambient Temperature

PACKAGE DIMENSIONS in millimeters

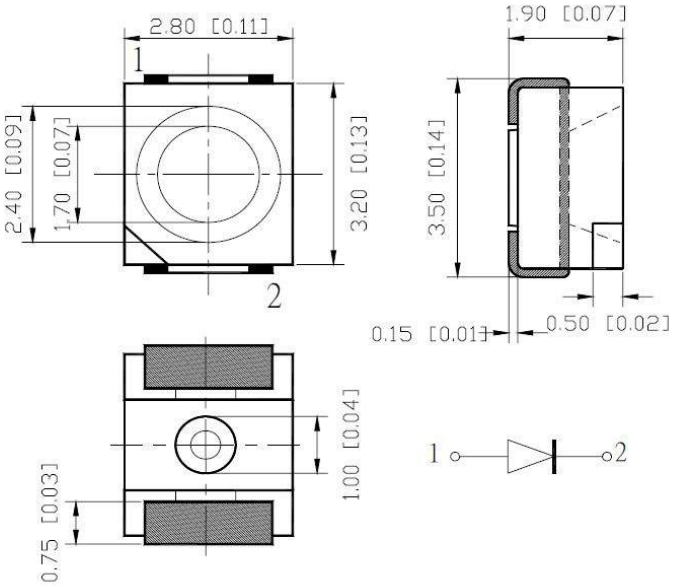

SOLDER PAD LAYOUT

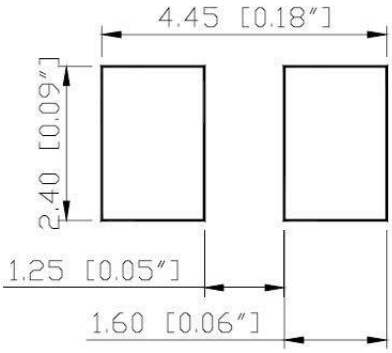

For technical questions, contact: LED@vishay.com
THIS DOCUMENT IS SUBJECT TO CHANGE WITHOUT NOTICE. THE PRODUCTS DESCRIBED HEREIN AND THIS DOCUMENT ARE SUBJECT TO SPECIFIC DISCLAIMERS, SET FORTH AT www.vishay.com/doc?91000

METHOD OF TAPING/POLARITY AND TAPE AND REEL

SMD LED (VLM3 - SERIES)

Vishay's LEDs in SMD packages are available in an antistatic 8 mm blister tape (in accordance with DIN IEC 40 (CO 564) for automatic component insertation. The blister tape is a plastic strip with impressed component cavities, covered by a top tape.

ARRANGEMENT OF TAPE

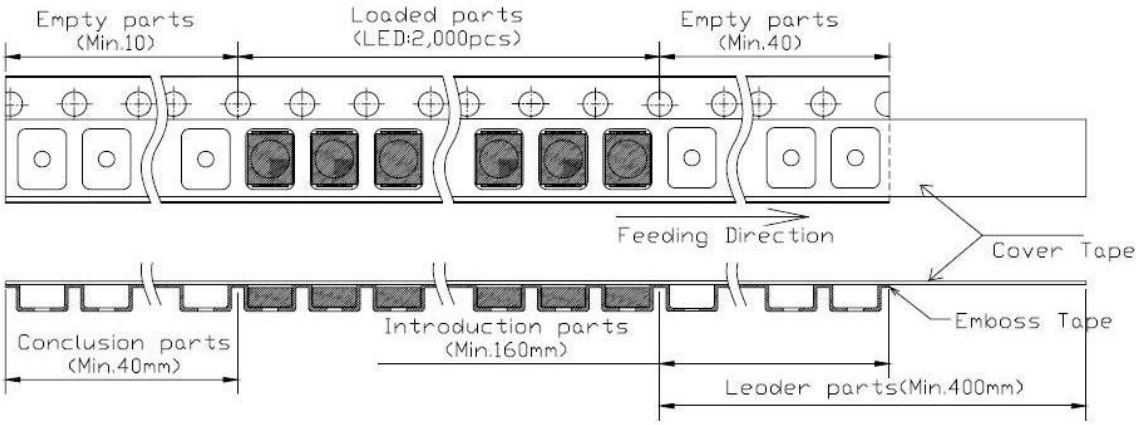

FEEDING DIRECTION

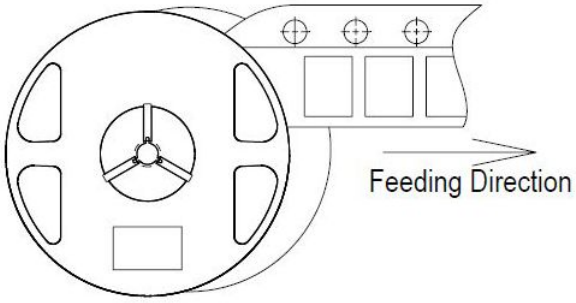

SOLDERING PROFILE

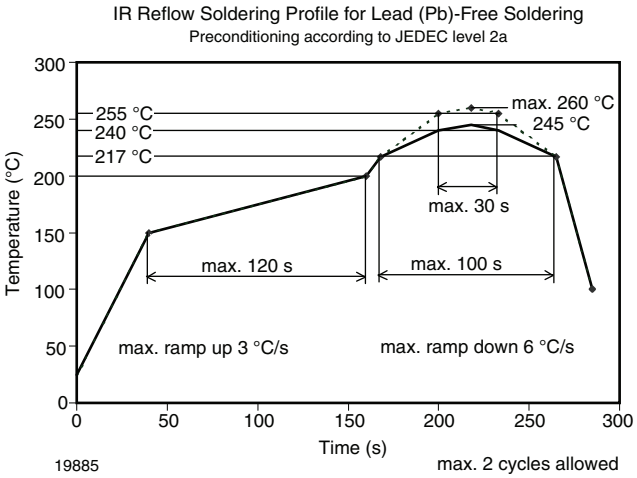

Fig. 7 - Vishay Lead (Pb)-Free Reflow Soldering Profile (according to J-STD-020C)

DIMENSIONS OF REEL in millimeters

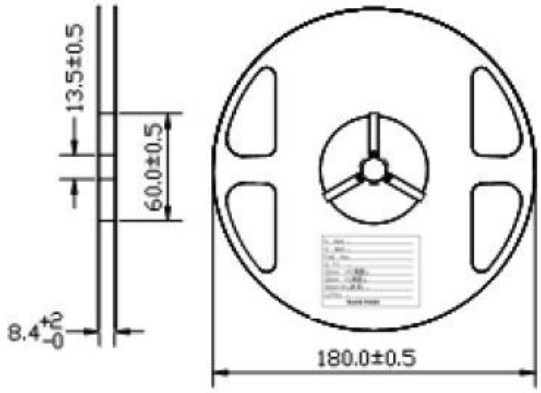

For technical questions, contact: LED@vishay.com
THIS DOCUMENT IS SUBJECT TO CHANGE WITHOUT NOTICE. THE PRODUCTS DESCRIBED HEREIN AND THIS DOCUMENT ARE SUBJECT TO SPECIFIC DISCLAIMERS, SET FORTH AT www.vishay.com/doc?91000

BAR CODE PRODUCT LABEL (example only)

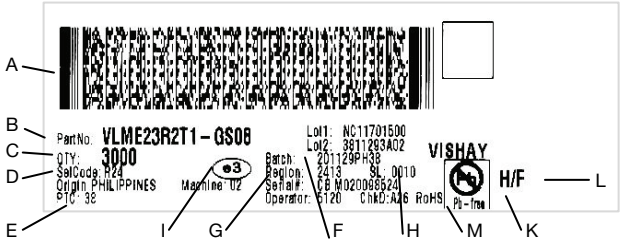

A. 2D barcode

B. Vishay part number

C. Quantity

D. SEL = selection code (binning)

E. Code of manufacturing plant

F. Batch = date code: year / week / plant code

G. Region code

H. SL = sales location

I. Terminations finishing

K. Lead (Pb)-free symbol

L. Halogen-free symbol

M. RoHS symbol

DRY PACKING

The reel is packed in an anti-humidity bag to protect the devices from absorbing moisture during transportation and storage.

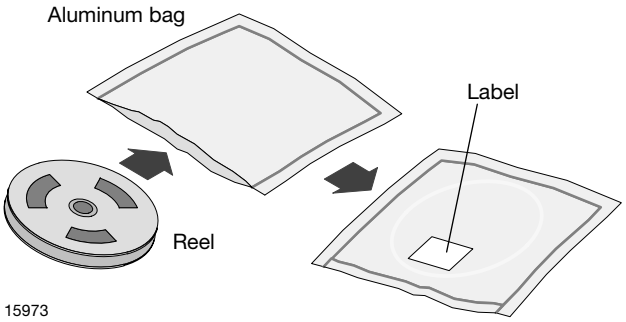

FINAL PACKING

The sealed reel is packed into a cardboard box. A secondary cardboard box is used for shipping purposes.

RECOMMENDED METHOD OF STORAGE

Dry box storage is recommended as soon as the aluminum bag has been opened to prevent moisture absorption. The following conditions should be observed, if dry boxes are not available:

- Storage temperature 10 °C to 30 °C
- Storage humidity ≤ 60 % RH max.

After more than 672 h under these conditions moisture content will be too high for reflow soldering.

In case of moisture absorption, the devices will recover to the former condition by drying under the following condition:

192 h at 40 °C + 5 °C / - 0 °C and < 5 % RH (dry air / nitrogen) or
96 h at 60 °C + 5 °C and < 5 % RH for all device containers or
24 h at 100 °C + 5 °C not suitable for reel or tubes.

An EIA JEDEC standard JESD22-A112 level 2a label is included on all dry bags.

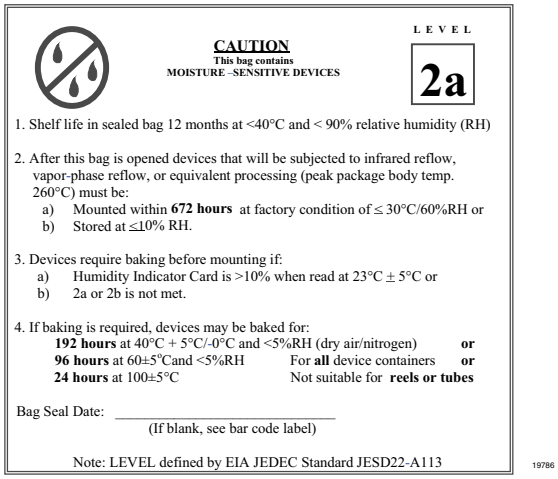
CAUTION
This bag contains
MOISTURE –SENSITIVE DEVICES

LEVEL
2a

1. Shelf life in sealed bag 12 months at <40°C and < 90% relative humidity (RH)

2. After this bag is opened devices that will be subjected to infrared reflow, vapor-phase reflow, or equivalent processing (peak package body temp. 260°C) must be:
   a) Mounted within **672 hours** at factory condition of ≤ 30°C/60%RH or
   b) Stored at ≤10% RH.

3. Devices require baking before mounting if:
   a) Humidity Indicator Card is >10% when read at 23°C ± 5°C or
   b) 2a or 2b is not met.

4. If baking is required, devices may be baked for:
   192 hours at 40°C + 5°C/-0°C and <5%RH (dry air/nitrogen) **or**
   96 hours at 60±5°Cand <5%RH For **all** device containers **or**
   24 hours at 100±5°C Not suitable for **reels or tubes**

Bag Seal Date: _____
(If blank, see bar code label)

Note: LEVEL defined by EIA JEDEC Standard JESD22-A113

19786

Example of JESD22-A112 level 2a label

ESD PRECAUTION

Proper storage and handling procedures should be followed to prevent ESD damage to the devices especially when they are removed from the antistatic shielding bag. Electro-static sensitive devices warning labels are on the packaging.

VISHAY SEMICONDUCTORS STANDARD BAR CODE LABELS

The Vishay Semiconductors standard bar code labels are printed at final packing areas. The labels are on each packing unit and contain Vishay Semiconductors specific data.

THIS DOCUMENT IS SUBJECT TO CHANGE WITHOUT NOTICE. THE PRODUCTS DESCRIBED HEREIN AND THIS DOCUMENT ARE SUBJECT TO SPECIFIC DISCLAIMERS, SET FORTH AT www.vishay.com/doc?91000

Disclaimer

ALL PRODUCT, PRODUCT SPECIFICATIONS AND DATA ARE SUBJECT TO CHANGE WITHOUT NOTICE TO IMPROVE RELIABILITY, FUNCTION OR DESIGN OR OTHERWISE.

Vishay Intertechnology, Inc., its affiliates, agents, and employees, and all persons acting on its or their behalf (collectively, “Vishay”), disclaim any and all liability for any errors, inaccuracies or incompleteness contained in any datasheet or in any other disclosure relating to any product.

Vishay makes no warranty, representation or guarantee regarding the suitability of the products for any particular purpose or the continuing production of any product. To the maximum extent permitted by applicable law, Vishay disclaims (i) any and all liability arising out of the application or use of any product, (ii) any and all liability, including without limitation special, consequential or incidental damages, and (iii) any and all implied warranties, including warranties of fitness for particular purpose, non-infringement and merchantability.

Statements regarding the suitability of products for certain types of applications are based on Vishay's knowledge of typical requirements that are often placed on Vishay products in generic applications. Such statements are not binding statements about the suitability of products for a particular application. It is the customer's responsibility to validate that a particular product with the properties described in the product specification is suitable for use in a particular application. Parameters provided in datasheets and / or specifications may vary in different applications and performance may vary over time. All operating parameters, including typical parameters, must be validated for each customer application by the customer's technical experts. Product specifications do not expand or otherwise modify Vishay's terms and conditions of purchase, including but not limited to the warranty expressed therein.

Hyperlinks included in this datasheet may direct users to third-party websites. These links are provided as a convenience and for informational purposes only. Inclusion of these hyperlinks does not constitute an endorsement or an approval by Vishay of any of the products, services or opinions of the corporation, organization or individual associated with the third-party website. Vishay disclaims any and all liability and bears no responsibility for the accuracy, legality or content of the third-party website or for that of subsequent links.

Except as expressly indicated in writing, Vishay products are not designed for use in medical, life-saving, or life-sustaining applications or for any other application in which the failure of the Vishay product could result in personal injury or death. Customers using or selling Vishay products not expressly indicated for use in such applications do so at their own risk. Please contact authorized Vishay personnel to obtain written terms and conditions regarding products designed for such applications.

No license, express or implied, by estoppel or otherwise, to any intellectual property rights is granted by this document or by any conduct of Vishay. Product names and markings noted herein may be trademarks of their respective owners.

© 2024 VISHAY INTERTECHNOLOGY, INC. ALL RIGHTS RESERVED