Fully Integrated Proximity and Ambient Light Sensor With Infrared Emitter, I²C Interface, and Interrupt Function

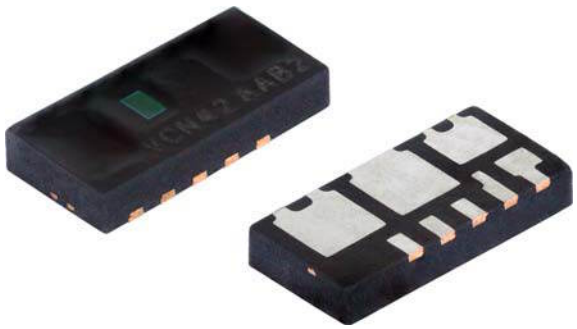

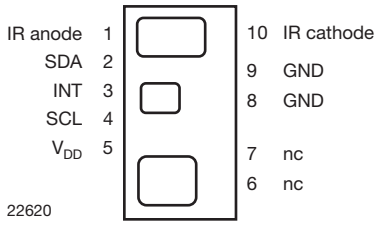

DESCRIPTION

The VCNL4020 is a fully integrated proximity and ambient light sensor. Fully integrated means that the infrared emitter is included in the package. It has 16 bit resolution. It includes a signal processing IC and features standard I²C communication interface. It features an interrupt function.

APPLICATIONS

- Proximity sensor for mobile devices (e.g. smart phones, touch phones, PDA, GPS) for touch screen locking, power saving, etc.
- Integrated ambient light function for display/keypad contrast control and dimming of mobile devices
- Proximity / optical switch for consumer, computing and industrial devices and displays
- Dimming control for consumer, computing and industrial displays

FEATURES

- Package type: surface-mount
- Dimensions (L x W x H in mm): 4.90 x 2.40 x 0.83
- Integrated modules: infrared emitter (IRED), ambient light sensor (ALS-PD), proximity sensor (PD), and signal conditioning IC
- Interrupt function
- Supply voltage range V_{DD}: 2.5 V to 3.6 V
- Supply voltage range IR anode: 2.5 V to 5 V
- Communication via I²C interface
- I²C bus H-level range: 1.7 V to 5 V
- Floor life: 72 h, MSL 4, according to J-STD-020
- Low stand by current consumption: 1.5 μA
- Material categorization: for definitions of compliance please see www.vishay.com/doc?99912

Pb-free
e4
RoHS COMPLIANT
HALOGEN FREE
GREEN (5-2008)

PROXIMITY FUNCTION

- Built-in infrared emitter and photo-pin-diode for proximity function
- 16 bit effective resolution for proximity detection range ensures excellent cross talk immunity
- Programmable LED drive current from 10 mA to 200 mA in 10 mA steps
- Excellent ambient light suppression by signal modulation
- Proximity distance up to 200 mm

AMBIENT LIGHT FUNCTION

- Built-in ambient light photo-pin-diode with close-to-human-eye sensitivity
- 16 bit dynamic range from 0.25 lx to 16 klx
- 100 Hz and 120 Hz flicker noise rejection

PRODUCT SUMMARY

PART NUMBER	OPERATING RANGE (mm)	OPERATING VOLTAGE RANGE (V)	I²C BUS VOLTAGE RANGE (V)	LED PULSE CURRENT [1] (mA)	AMBIENT LIGHT RANGE (lx)	AMBIENT LIGHT RESOLUTION (lx)	OUTPUT CODE	ADC RESOLUTION PROXIMITY / AMBIENT LIGHT
VCNL4020	1 to 200	2.5 to 3.6	1.7 to 5	10 to 200	0.25 to 16 383	0.25	16 bit, I²C	16 bit / 16 bit

Note

[1] Adjustable through I²C interface

For technical questions, contact: sensorstechsupport@vishay.com
THIS DOCUMENT IS SUBJECT TO CHANGE WITHOUT NOTICE. THE PRODUCTS DESCRIBED HEREIN AND THIS DOCUMENT ARE SUBJECT TO SPECIFIC DISCLAIMERS, SET FORTH AT www.vishay.com/doc?91000

ORDERING INFORMATION			
ORDERING CODE	PACKAGING	VOLUME [1]	REMARKS
VCNL4020-GS08	Tape and reel	MOQ: 3300 pcs	4.90 mm x 2.40 mm x 0.83 mm
VCNL4020-GS18		MOQ: 13 000 pcs	

Note

[1] MOQ: minimum order quantity

ABSOLUTE MAXIMUM RATINGS (T_{amb} = 25 °C, unless otherwise specified)					
PARAMETER	TEST CONDITION	SYMBOL	MIN.	MAX.	UNIT
Supply voltage		V_{DD}	-0.3	5.5	V
Operation temperature range		T_{amb}	-25	+85	°C
Storage temperature range		T_{stg}	-25	+85	°C
Total power dissipation	$T_{amb} \leq 25$ °C	P_{tot}		50	mW
Junction temperature		T_j		100	°C

BASIC CHARACTERISTICS (T_{amb} = 25 °C, unless otherwise specified)						
PARAMETER	TEST CONDITION	SYMBOL	MIN.	TYP.	MAX.	UNIT
Supply voltage V_{DD}			2.5		3.6	V
Supply voltage IR anode			2.5		5	V
I^2C Bus H-level range			1.7		5	V
INT H-level range			1.7		5	V
INT low voltage	3 mA sink current				0.4	V
Current consumption	Standby current, no IRED-operation			1.5	2	µA
Current consumption proximity mode incl. IRED (averaged)	2 measurements per second, IRED current 20 mA			5		µA
	250 measurements per second, IRED current 20 mA			520		µA
	2 measurements per second, IRED current 200 mA			35		µA
	250 measurements per second, IRED current 200 mA			4		mA
Current consumption ambient light mode	2 measurements per second averaging = 1			2.5		µA
	8 measurements per second averaging = 1			10		µA
	2 measurements per second averaging = 64			160		µA
	8 measurements per second averaging = 64			640		µA
Ambient light resolution	Digital resolution (LSB count)			0.25		lx
Ambient light output	E_V = 100 lx averaging = 64			400		counts
I^2C clock rate range		f_{SCL}			3400	kHz

For technical questions, contact: sensorstechsupport@vishay.com
THIS DOCUMENT IS SUBJECT TO CHANGE WITHOUT NOTICE. THE PRODUCTS DESCRIBED HEREIN AND THIS DOCUMENT ARE SUBJECT TO SPECIFIC DISCLAIMERS, SET FORTH AT www.vishay.com/doc?91000

CIRCUIT BLOCK DIAGRAM

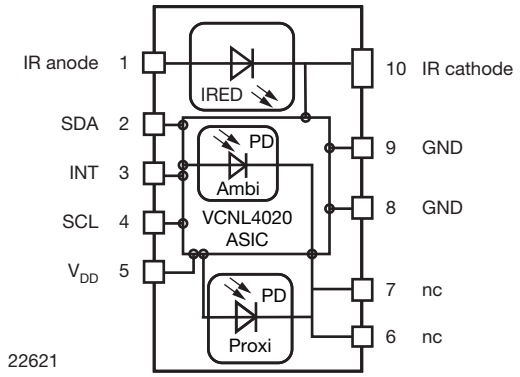

TEST CIRCUIT

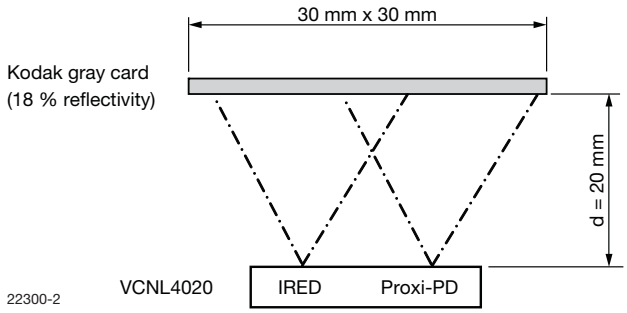

Note

- nc must not be electrically connected
  Pads 6 and 7 are only considered as solder pads

BASIC CHARACTERISTICS (T_{amb} = 25 °C, unless otherwise specified)

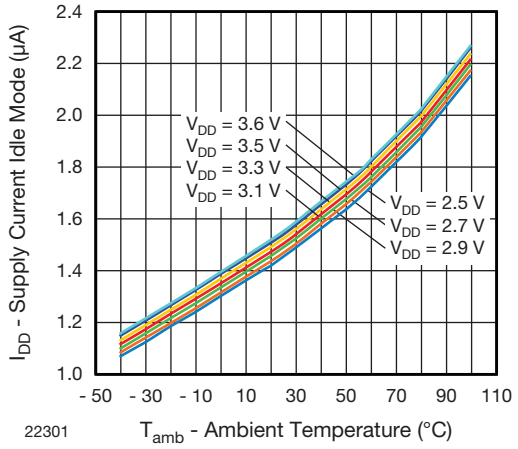

Fig. 1 - Idle Current vs. Ambient Temperature

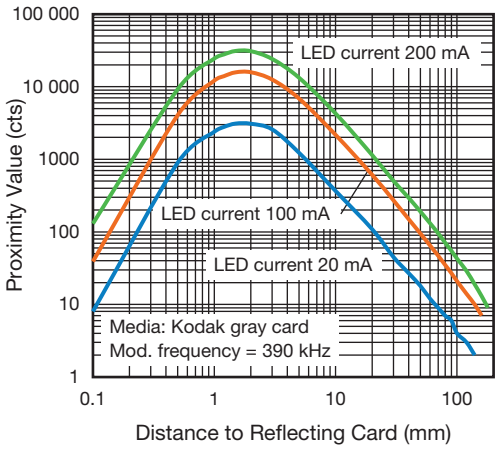

Fig. 3 - Proximity Value vs. Distance

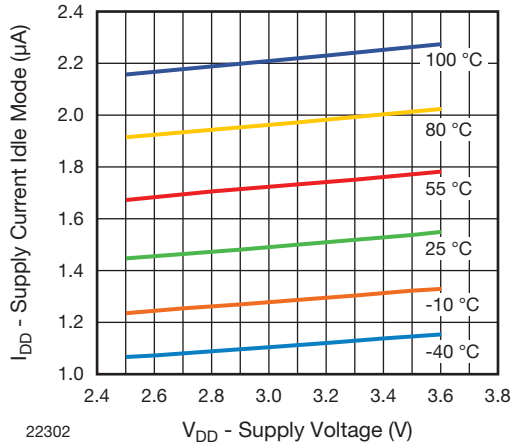

Fig. 2 - Idle Current vs. V_{DD}

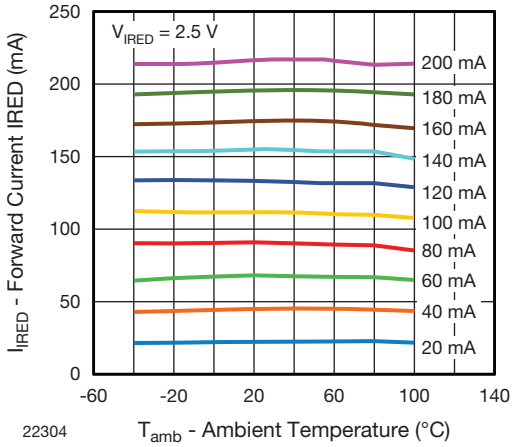

Fig. 4 - Forward Current vs. Temperature

For technical questions, contact: sensorstechsupport@vishay.com
THIS DOCUMENT IS SUBJECT TO CHANGE WITHOUT NOTICE. THE PRODUCTS DESCRIBED HEREIN AND THIS DOCUMENT ARE SUBJECT TO SPECIFIC DISCLAIMERS, SET FORTH AT www.vishay.com/doc?91000

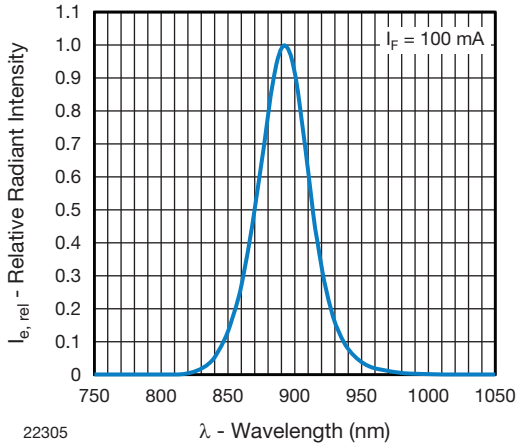

Fig. 5 - Relative Radiant Intensity vs. Wavelength

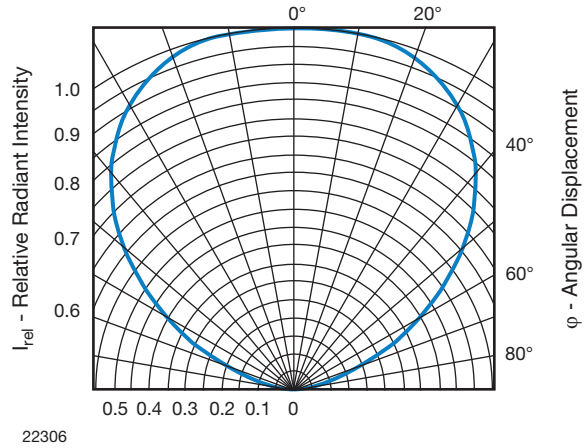

Fig. 6 - Relative Radiant Intensity vs. Angular Displacement

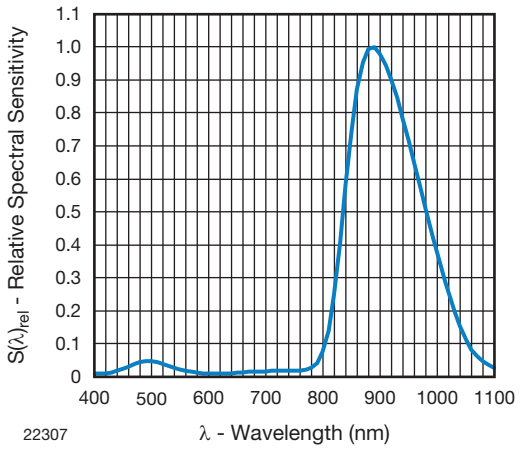

Fig. 7 - Relative Spectral Sensitivity vs. Wavelength (Proximity Sensor)

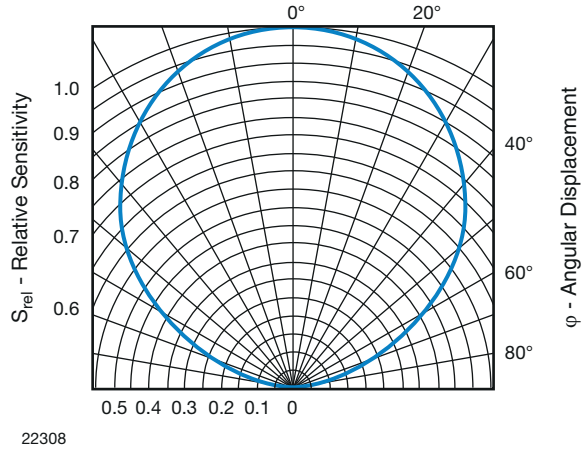

Fig. 8 - Relative Radiant Sensitivity vs. Angular Displacement (Proximity Sensor)

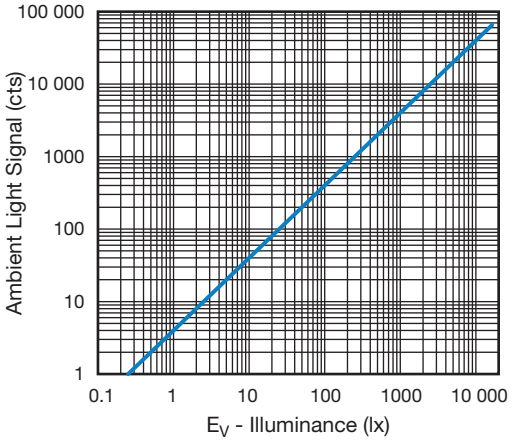

Fig. 9 - Ambient Light Value vs. Illuminance

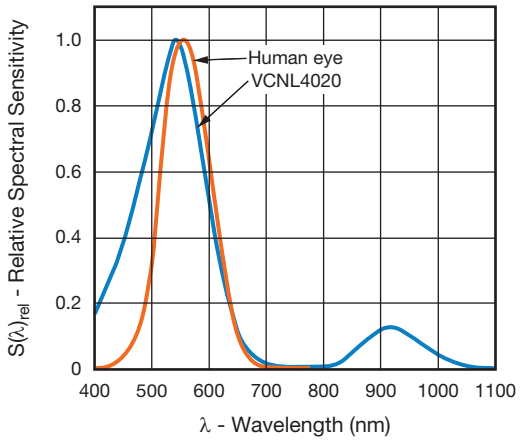

Fig. 10 - Relative Spectral Sensitivity vs. Wavelength (Ambient Light Sensor)

For technical questions, contact: sensorstechsupport@vishay.com
THIS DOCUMENT IS SUBJECT TO CHANGE WITHOUT NOTICE. THE PRODUCTS DESCRIBED HEREIN AND THIS DOCUMENT ARE SUBJECT TO SPECIFIC DISCLAIMERS, SET FORTH AT www.vishay.com/doc?91000

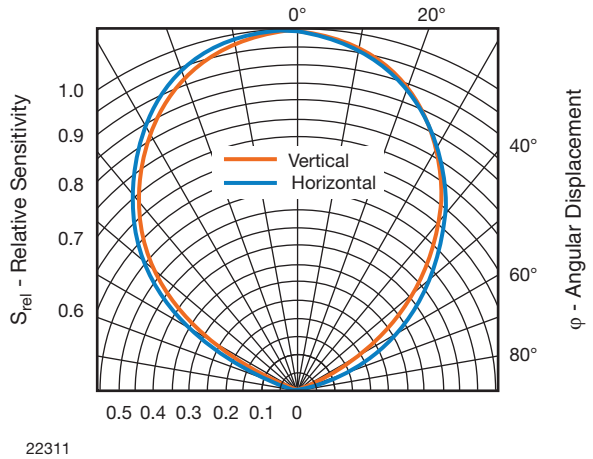

Fig. 11 - Relative Radiant Sensitivity vs. Angular Displacement
(Ambient Light Sensor)

APPLICATION INFORMATION

VCNL4020 is a cost effective solution of proximity and ambient light sensor with I²C bus interface. The standard serial digital interface is easy to access "Proximity Signal" and "Light Intensity" without complex calculation and programming by external controller. Beside the digital output also a flexible programmable interrupt pin is available.

1. Application Circuit

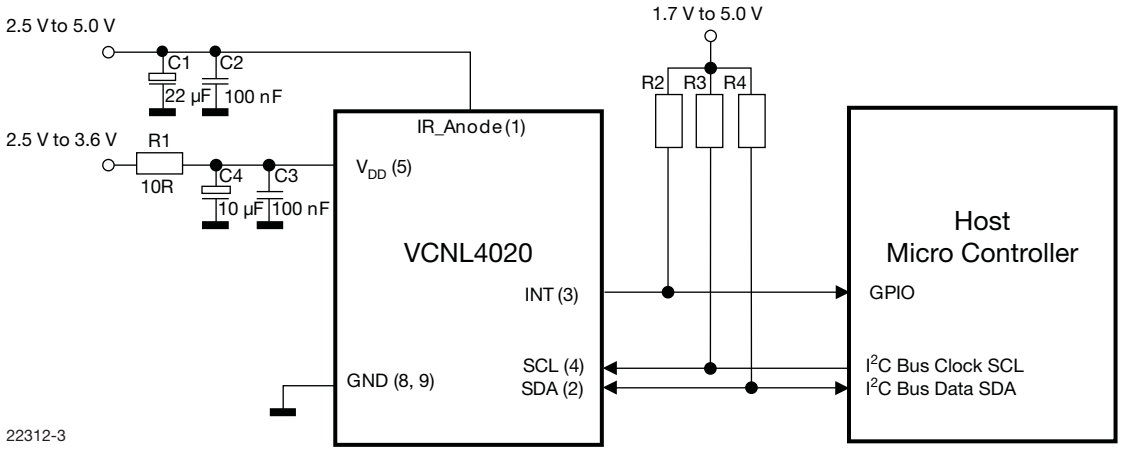

Fig. 12 - Application Circuit
(x) = Pin Number

Notes

- The interrupt pin is an open drain output. The needed pull-up resistor may be connected to the same supply voltage as the application controller and the pull-up resistors at SDA/SCL. Proposed value R2 should be >1 kΩ , e.g. 10 kΩ to 100 kΩ.
  Proposed value for R3 and R4, e.g. 2.2 kΩ to 4.7 kΩ, depend also on the I²C bus speed.
  For detailed description about set-up and use of the interrupt as well as more application related information see AN: "Designing VCNL4020 into an Application".
- IR_Cathode needs no external connection. The needed connection to the driver is done internally.

For technical questions, contact: sensorstechsupport@vishay.com
THIS DOCUMENT IS SUBJECT TO CHANGE WITHOUT NOTICE. THE PRODUCTS DESCRIBED HEREIN AND THIS DOCUMENT ARE SUBJECT TO SPECIFIC DISCLAIMERS, SET FORTH AT www.vishay.com/doc?91000

2. I²C Interface

The VCNL4020 contains seventeen 8 bit registers for operation control, parameter setup and result buffering. All registers are accessible via I²C communication. Figure 13 shows the basic I²C communication with VCNL4020.

The built in I²C interface is compatible with all I²C modes (standard, fast and high speed).

I²C H-level range = 1.7 V to 5 V.

Please refer to the I²C specification from NXP for details.

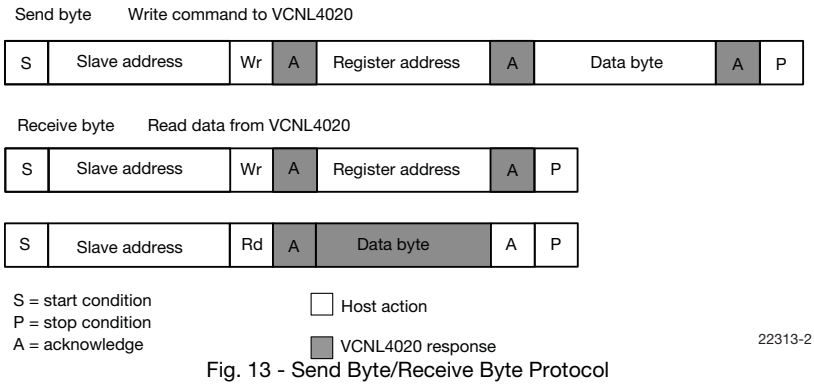

Fig. 13 - Send Byte/Receive Byte Protocol

Device Address

The VCNL4020 has a fix slave address for the host programming and accessing selection. The predefined 7 bit I²C bus address is set to 0010 011 = 13h. The least significant bit (LSB) defines read or write mode. Accordingly the bus address is set to 0010 011x = 26h for write, 27h for read.

Register Addresses

VCNL4020 has seventeen user accessible 8 bit registers. The register addresses are 80h (register #0) to 90h (register #16).

REGISTER FUNCTIONS

Register #0 Command Register

Register address = 80h

The register #0 is for starting ambient light or proximity measurements. This register contains 2 flag bits for data ready indication.

TABLE 1 - COMMAND REGISTER #0

Bit 7	Bit 6	Bit 5	Bit 4	Bit 3	Bit 2	Bit 1	Bit 0
config_lock	als_data_rdy	prox_data_rdy	als_od	prox_od	als_en	prox_en	selftimed_en

Description	
config_lock	Read only bit. Value = 1
als_data_rdy	Read only bit. Value = 1 when ambient light measurement data is available in the result registers. This bit will be reset when one of the corresponding result registers (reg #5, reg #6) is read.
prox_data_rdy	Read only bit. Value = 1 when proximity measurement data is available in the result registers. This bit will be reset when one of the corresponding result registers (reg #7, reg #8) is read.
als_od	R/W bit. Starts a single on-demand measurement for ambient light. If averaging is enabled, starts a sequence of readings and stores the averaged result. Result is available at the end of conversion for reading in the registers #5(HB) and #6(LB).
prox_od	R/W bit. Starts a single on-demand measurement for proximity. Result is available at the end of conversion for reading in the registers #7(HB) and #8(LB).
als_en	R/W bit. Enables periodic als measurement
prox_en	R/W bit. Enables periodic proximity measurement
selftimed_en	R/W bit. Enables state machine and LP oscillator for self timed measurements; no measurement is performed until the corresponding bit is set

Note

- With setting bit 3 and bit 4 at the same write command, a simultaneously measurement of ambient light and proximity is done. Beside als_en and/or prox_en first selftimed_en needs to be set. On-demand measurement modes are disabled if selftimed_en bit is set. For the selftimed_en mode changes in reading rates (reg #4 and reg #2) can be made only when b0 (selftimed_en bit) = 0. For the als_od mode changes to the reg #4 can be made only when b4 (als_od bit) = 0; this is to avoid synchronization problems and undefined states between the clock domains. In effect this means that it is only reasonable to change rates while no selftimed conversion is ongoing.

THIS DOCUMENT IS SUBJECT TO CHANGE WITHOUT NOTICE. THE PRODUCTS DESCRIBED HEREIN AND THIS DOCUMENT ARE SUBJECT TO SPECIFIC DISCLAIMERS, SET FORTH AT www.vishay.com/doc?91000

Register #1 Product ID Revision Register

Register address = 81h. This register contains information about product ID and product revision.

Register data value of current revision = 21h.

TABLE 2 - PRODUCT ID REVISION REGISTER #1							
Bit 7	Bit 6	Bit 5	Bit 4	Bit 3	Bit 2	Bit 1	Bit 0
Product ID				Revision ID			
Description							
Product ID	Read only bits. Value = 2						
Revision ID	Read only bits. Value = 1						

Register #2 Rate of Proximity Measurement

Register address = 82h.

TABLE 3 - PROXIMITY RATE REGISTER #2							
Bit 7	Bit 6	Bit 5	Bit 4	Bit 3	Bit 2	Bit 1	Bit 0
n/a					Rate of Proximity Measurement (no. of measurements per second)		
Description							
Proximity rate	R/W bits. 000 - 1.95 measurements/s (DEFAULT) 001 - 3.90625 measurements/s 010 - 7.8125 measurements/s 011 - 16.625 measurements/s 100 - 31.25 measurements/s 101 - 62.5 measurements/s 110 - 125 measurements/s 111 - 250 measurements/s						

Note

- If self_timed measurement is running, any new value written in this register will not be taken over until the mode is actualy cycled.

Register #3 LED Current Setting for Proximity Mode

Register address = 83h. This register is to set the LED current value for proximity measurement.

The value is adjustable in steps of 10 mA from 0 mA to 200 mA.

This register also contains information about the used device fuse program ID.

TABLE 4 - IR LED CURRENT REGISTER #3							
Bit 7	Bit 6	Bit 5	Bit 4	Bit 3	Bit 2	Bit 1	Bit 0
Fuse prog ID		IR LED current value					
Description							
Fuse prog ID	Read only bits. Information about fuse program revision used for initial setup/calibration of the device.						
IR LED current value	R/W bits. IR LED current = Value (dec.) x 10 mA. Valid Range = 0 to 20d. e.g. 0 = 0 mA , 1 = 10 mA, …., 20 = 200 mA (2 = 20 mA = DEFAULT) LED Current is limited to 200 mA for values higher as 20d.						

For technical questions, contact: sensorstechsupport@vishay.com
THIS DOCUMENT IS SUBJECT TO CHANGE WITHOUT NOTICE. THE PRODUCTS DESCRIBED HEREIN AND THIS DOCUMENT ARE SUBJECT TO SPECIFIC DISCLAIMERS, SET FORTH AT www.vishay.com/doc?91000

Register #4 Ambient Light Parameter Register

Register address = 84h.

TABLE 5 - AMBIENT LIGHT PARAMETER REGISTER #4							
Bit 7	Bit 6	Bit 5	Bit 4	Bit 3	Bit 2	Bit 1	Bit 0
Cont. conv. mode	als_rate			Auto offset compensation	Averaging function (number of measurements per run)		

Description	
Cont. conversion mode	R/W bit. Continuous conversion mode. Enable = 1; Disable = 0 = DEFAULT This function can be used for performing faster ambient light measurements. This mode should only be used with ambient light on-demand measurements. Do not use with self-timed mode. Please refer to the application information chapter 3.3 for details about this function.
Ambient light measurement rate	R/W bits. Ambient light measurement rate 000 - 1 samples/s 001 - 2 samples/s = DEFAULT 010 - 3 samples/s 011 - 4 samples/s 100 - 5 samples/s 101 - 6 samples/s 110 - 8 samples/s 111 - 10 samples/s
Auto offset compensation	R/W bit. Automatic offset compensation. Enable = 1 = DEFAULT; Disable = 0 In order to compensate a technology, package or temperature related drift of the ambient light values there is a built in automatic offset compensation function. With active auto offset compensation the offset value is measured before each ambient light measurement and subtracted automatically from actual reading.
Averaging function	R/W bits. Averaging function. Bit values sets the number of single conversions done during one measurement cycle. Result is the average value of all conversions. Number of conversions = $2^{decimal_value}$ e.g. 0 = 1 conv., 1 = 2 conv, 2 = 4 conv., ….7 = 128 conv. DEFAULT = 32 conv. (bit 2 to bit 0: 101)

Note

- If self_timed measurement is running, any new value written in this register will not be taken over until the mode is actualy cycled.

Register #5 and #6 Ambient Light Result Register

Register address = 85h and 86h. These registers are the result registers for ambient light measurement readings.

The result is a 16 bit value. The high byte is stored in register #5 and the low byte in register #6.

TABLE 6 - AMBIENT LIGHT RESULT REGISTER #5							
Bit 7	Bit 6	Bit 5	Bit 4	Bit 3	Bit 2	Bit 1	Bit 0
Description							
Read only bits. High byte (15:8) of ambient light measurement result							

TABLE 7 - AMBIENT LIGHT RESULT REGISTER #6							
Bit 7	Bit 6	Bit 5	Bit 4	Bit 3	Bit 2	Bit 1	Bit 0
Description							
Read only bits. Low byte (7:0) of ambient light measurement result							

THIS DOCUMENT IS SUBJECT TO CHANGE WITHOUT NOTICE. THE PRODUCTS DESCRIBED HEREIN AND THIS DOCUMENT ARE SUBJECT TO SPECIFIC DISCLAIMERS, SET FORTH AT www.vishay.com/doc?91000

Register #7 and #8 Proximity Measurement Result Register

Register address = 87h and 88h. These registers are the result registers for proximity measurement readings.

The result is a 16 bit value. The high byte is stored in register #7 and the low byte in register #8.

TABLE 8 - PROXIMITY RESULT REGISTER #7							
Bit 7	Bit 6	Bit 5	Bit 4	Bit 3	Bit 2	Bit 1	Bit 0
Description							
Read only bits. High byte (15:8) of proximity measurement result							

TABLE 9 - PROXIMITY RESULT REGISTER #8							
Bit 7	Bit 6	Bit 5	Bit 4	Bit 3	Bit 2	Bit 1	Bit 0
Description							
Read only bits. Low byte (7:0) of proximity measurement result							

Register #9 Interrupt Control Register

Register address = 89h.

TABLE 10 - INTERRUPT CONTROL REGISTER #9							
Bit 7	Bit 6	Bit 5	Bit 4	Bit 3	Bit 2	Bit 1	Bit 0
Int count exceed			n/a	INT_PROX_ ready_EN	INT_ALS_ ready_EN	INT_THRES_EN	INT_THRES_ SEL
Description							

Int count exceed	R/W bits. These bits contain the number of consecutive measurements needed above/below the threshold 000 - 1 count = DEFAULT 001 - 2 count 010 - 4 count 011 - 8 count 100 -16 count 101 - 32 count 110 - 64 count 111 - 128 count
INT_PROX_ready_EN	R/W bit. Enables interrupt generation at proximity data ready
INT_ALS_ ready_EN	R/W bit. Enables interrupt generation at ambient data ready
INT_THRES_EN	R/W bit. Enables interrupt generation when high or low threshold is exceeded
INT_THRES_SEL	R/W bit. If 0: thresholds are applied to proximity measurements If 1: thresholds are applied to als measurements

For technical questions, contact: sensorstechsupport@vishay.com
THIS DOCUMENT IS SUBJECT TO CHANGE WITHOUT NOTICE. THE PRODUCTS DESCRIBED HEREIN AND THIS DOCUMENT ARE SUBJECT TO SPECIFIC DISCLAIMERS, SET FORTH AT www.vishay.com/doc?91000

Register #10 and #11 Low Threshold

Register address = 8Ah and 8Bh. These registers contain the low threshold value. The value is a 16 bit word. The high byte is stored in register #10 and the low byte in register #11.

TABLE 11 - LOW THRESHOLD REGISTER #10							
Bit 7	Bit 6	Bit 5	Bit 4	Bit 3	Bit 2	Bit 1	Bit 0
Description							
R/W bits. High byte (15:8) of low threshold value							

TABLE 12 - LOW THRESHOLD REGISTER #11							
Bit 7	Bit 6	Bit 5	Bit 4	Bit 3	Bit 2	Bit 1	Bit 0
Description							
R/W bits. Low byte (7:0) of low threshold value							

Register #12 and #13 High Threshold

Register address = 8Ch and 8Dh. These registers contain the high threshold value. The value is a 16 bit word. The high byte is stored in register #12 and the low byte in register #13.

TABLE 13 - HIGH THRESHOLD REGISTER #12							
Bit 7	Bit 6	Bit 5	Bit 4	Bit 3	Bit 2	Bit 1	Bit 0
Description							
R/W bits. High byte (15:8) of high threshold value							

TABLE 14 - HIGH THRESHOLD REGISTER #13							
Bit 7	Bit 6	Bit 5	Bit 4	Bit 3	Bit 2	Bit 1	Bit 0
Description							
R/W bits. Low byte (7:0) of high threshold value							

Register #14 Interrupt Status Register

Register address = 8Eh. This register contains information about the interrupt status for either proximity or ALS function and indicates if high or low going threshold exceeded.

TABLE 15 - INTERRUPT STATUS REGISTER #14							
Bit 7	Bit 6	Bit 5	Bit 4	Bit 3	Bit 2	Bit 1	Bit 0
n/a				int_prox_ready	int_als_ready	int_th_low	int_th_hi
Description							
int_prox_ready	R/W bit. Indicates a generated interrupt for proximity						
int_als_ready	R/W bit. Indicates a generated interrupt for als						
int_th_low	R/W bit. Indicates a low threshold exceed						
int_th_hi	R/W bit. Indicates a high threshold exceed						

Note

- Once an interrupt is generated the corresponding status bit goes to 1 and stays there unless it is cleared by writing a 1 in the corresponding bit. The int pad will be pulled down while at least one of the status bit is 1.

THIS DOCUMENT IS SUBJECT TO CHANGE WITHOUT NOTICE. THE PRODUCTS DESCRIBED HEREIN AND THIS DOCUMENT ARE SUBJECT TO SPECIFIC DISCLAIMERS, SET FORTH AT www.vishay.com/doc?91000

Register #15 Proximity Modulator Timing Adjustment

Register address = 8Fh.

TABLE 16 - PROXIMITY MODULATOR TIMING ADJUSTMENT #15							
Bit 7	Bit 6	Bit 5	Bit 4	Bit 3	Bit 2	Bit 1	Bit 0
Modulation delay time			Proximity frequency		Modulation dead time		

Description	
Modulation delay time	R/W bits. Setting a delay time between IR LED signal and IR input signal evaluation. This function is for compensation of delays from IR LED and IR photo diode. Also in respect to the possibility for setting different proximity signal frequency. Correct adjustment is optimizing measurement signal level. (DEFAULT = 0)
Proximity frequency	R/W bits. Setting the proximity IR test signal frequency The proximity measurement is using a square IR signal as measurement signal. Four different values are possible: 00 = 390.625 kHz (DEFAULT) 01 = 781.25 kHz 10 = 1.5625 MHz 11 = 3.125 MHz
Modulation dead time	R/W bits. Setting a dead time in evaluation of IR signal at the slopes of the IR signal. (DEFAULT = 1) This function is for reducing of possible disturbance effects. This function is reducing signal level and should be used carefully.

Note

- The settings for best performance will be provided by Vishay. With first samples this is evaluated to:
  Delay Time = 0 ; Dead Time = 1 and Prox Frequency = 0 . With that register#15 should be programmed with 1 (= default value).

Register #16 Ambient IR Light Level Register

Register address = 90h.

This register is not intended to be used by customer.

3. IMPORTANT APPLICATION HINTS AND EXAMPLES

3.1 Receiver standby mode

In standby mode the receiver has the lowest current consumption of about 1.5 µA. In this mode only the I^2C interface is active. This is always valid, when there are no measurement demands for proximity and ambient light executed. Also the current sink for the IR-LED is inactive, so there is no need for changing register #3 (IR LED current).

3.2 Data Read

In order to get a certain register value, the register has to be addressed without data like shown in the following scheme. After this register addressing, the data from the addressed register is written after a subsequent read command.

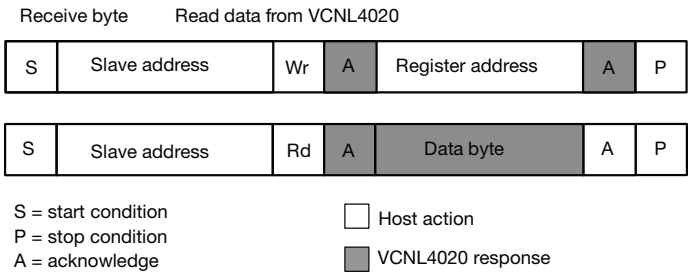

Fig. 14 - Send Byte/Receive Byte Protocol

The stop condition between these write and read sequences is not mandatory. It works also with a repeated start condition.

Note

- For reading out 2 (or more) subsequent registers like the result registers, it is not necessary to address each of the registers separately. After one read command the internal register counter is increased automatically and any subsequent read command is accessing the next register.

THIS DOCUMENT IS SUBJECT TO CHANGE WITHOUT NOTICE. THE PRODUCTS DESCRIBED HEREIN AND THIS DOCUMENT ARE SUBJECT TO SPECIFIC DISCLAIMERS, SET FORTH AT www.vishay.com/doc?91000

Example: read register “Ambient Light Result Register” #5 and #6:

Addressing:command: 26h, 85h (VCNL4020_I²C_Bus_Write_Adr., Ambient Light Result Register #5 [85])

Read register #5:command: 27h, data (VCNL4020_I²C_Bus_Read_Adr., {High Byte Data of Ambient Light Result register #5 [85])}

Read register #6:command: 27h, data (VCNL4020_I²C_Bus_Read_Adr., {Low Byte Data of Ambient Light Result register #6 [86])}

3.3 Continuous Conversion Mode in Ambient Light Measurement

In the following is a detail description of the function “continuous conversion” (bit 7 of register #4)

Standard mode (bit 7 of reg #4 = 0):
In standard mode the ambient light measurement is done during a fixed time frame of 100 ms. The single measurement itself takes actually only appr. 300 µs.

The following figures show examples of this measurement timing in standard mode using averaging function 2 and 8 as examples for illustration (possible values up to 128).

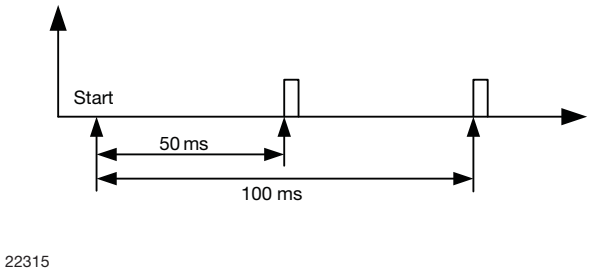

Fig. 15 - Ambient Light Measurement with Averaging = 2;
Final Measurement Result = Average of these 2 Measurements

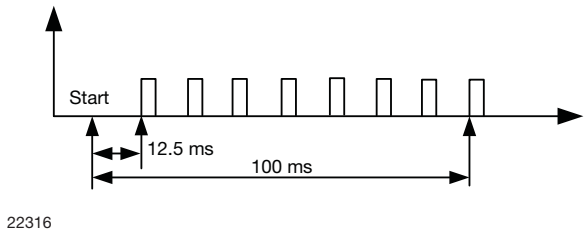

Fig. 16 - Ambient Light Measurement with Averaging = 8;
Final Measurement Result = Average of these 8 Measurements

Note

- ≥ Independent of setting of averaging the result is available only after 100 ms.

Continuous conversion mode (bit 7 of register #4 = 1):
In continuous conversion mode the single measurements are done directly subsequent after each other.

See following examples in figure 17 and 18

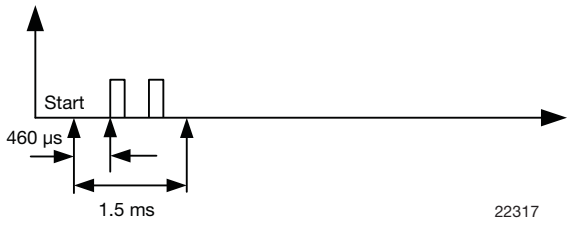

Fig. 17 - Ambient Light Measurement with Averaging = 2;
using Continuous Conversion Mode

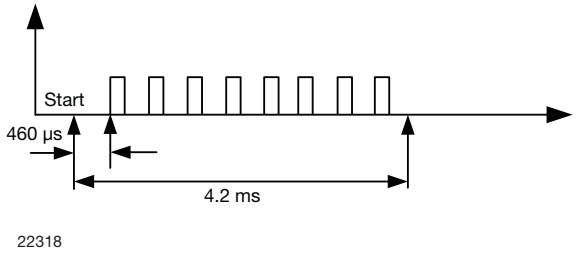

Fig. 18 - Ambient Light Measurement with Averaging = 8;
using Continuous Conversion Mode

THIS DOCUMENT IS SUBJECT TO CHANGE WITHOUT NOTICE. THE PRODUCTS DESCRIBED HEREIN AND THIS DOCUMENT ARE SUBJECT TO SPECIFIC DISCLAIMERS, SET FORTH AT www.vishay.com/doc?91000

PACKAGE DIMENSIONS in millimeters

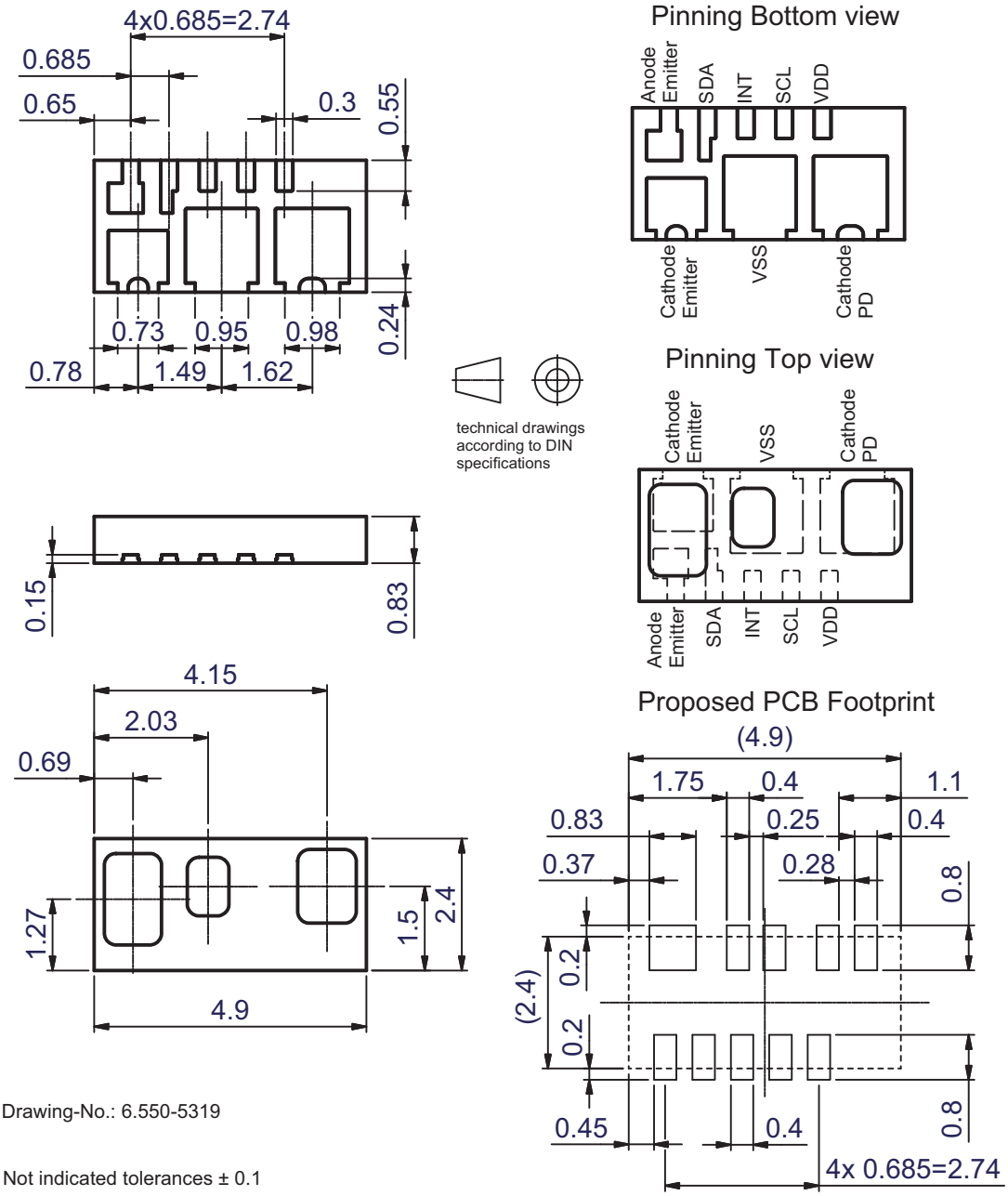

Drawing-No.: 6.550-5319

Not indicated tolerances ± 0.1

For technical questions, contact: sensorstechsupport@vishay.com
THIS DOCUMENT IS SUBJECT TO CHANGE WITHOUT NOTICE. THE PRODUCTS DESCRIBED HEREIN AND THIS DOCUMENT ARE SUBJECT TO SPECIFIC DISCLAIMERS, SET FORTH AT www.vishay.com/doc?91000

TAPE AND REEL DIMENSIONS in millimeters

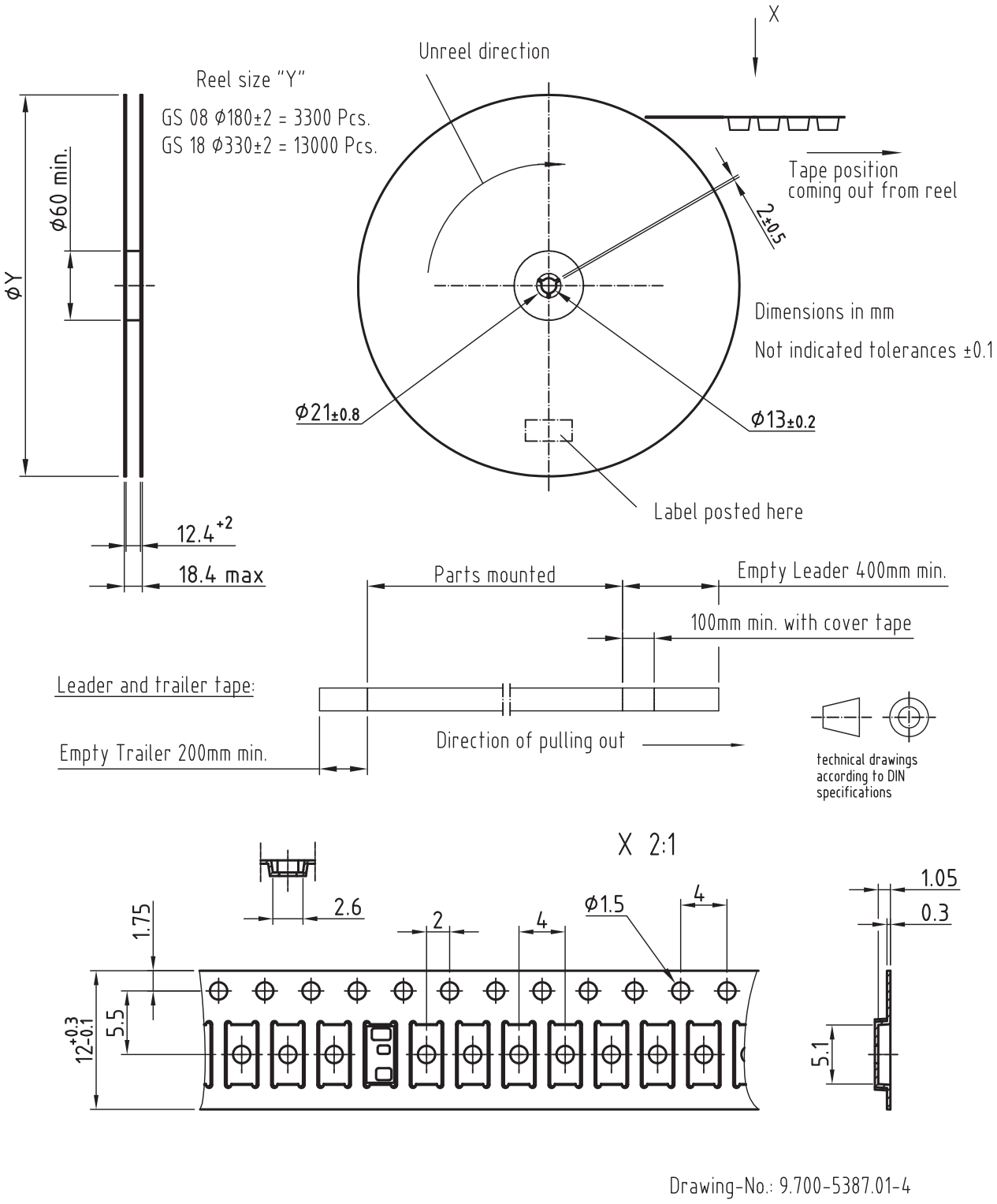

For technical questions, contact: sensorstechsupport@vishay.com
THIS DOCUMENT IS SUBJECT TO CHANGE WITHOUT NOTICE. THE PRODUCTS DESCRIBED HEREIN AND THIS DOCUMENT ARE SUBJECT TO SPECIFIC DISCLAIMERS, SET FORTH AT www.vishay.com/doc?91000

SOLDER PROFILE

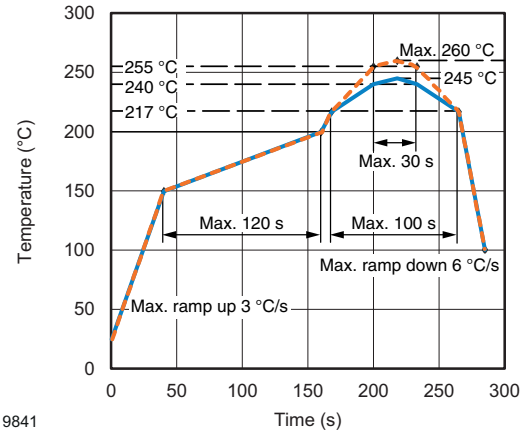

Fig. 19 - Lead (Pb)-free Reflow Solder Profile According to J-STD-020

DRYPACK

Devices are packed in moisture barrier bags (MBB) to prevent the products from moisture absorption during transportation and storage. Each bag contains a desiccant.

FLOOR LIFE

Floor life (time between soldering and removing from MBB) must not exceed the time indicated on MBB label:

Floor life: 72 h

Conditions: T_{amb} < 30 °C, RH < 60 %

Moisture sensitivity level 4, according to J-STD-020.

DRYING

In case of moisture absorption devices should be baked before soldering. Conditions see J-STD-020 or label. Devices taped on reel dry using recommended conditions 192 h at 40 °C (+ 5 °C), RH < 5 %.

For technical questions, contact: sensorstechsupport@vishay.com
THIS DOCUMENT IS SUBJECT TO CHANGE WITHOUT NOTICE. THE PRODUCTS DESCRIBED HEREIN AND THIS DOCUMENT ARE SUBJECT TO SPECIFIC DISCLAIMERS, SET FORTH AT www.vishay.com/doc?91000

Disclaimer

ALL PRODUCT, PRODUCT SPECIFICATIONS AND DATA ARE SUBJECT TO CHANGE WITHOUT NOTICE TO IMPROVE RELIABILITY, FUNCTION OR DESIGN OR OTHERWISE.

Vishay Intertechnology, Inc., its affiliates, agents, and employees, and all persons acting on its or their behalf (collectively, “Vishay”), disclaim any and all liability for any errors, inaccuracies or incompleteness contained in any datasheet or in any other disclosure relating to any product.

Vishay makes no warranty, representation or guarantee regarding the suitability of the products for any particular purpose or the continuing production of any product. To the maximum extent permitted by applicable law, Vishay disclaims (i) any and all liability arising out of the application or use of any product, (ii) any and all liability, including without limitation special, consequential or incidental damages, and (iii) any and all implied warranties, including warranties of fitness for particular purpose, non-infringement and merchantability.

Statements regarding the suitability of products for certain types of applications are based on Vishay's knowledge of typical requirements that are often placed on Vishay products in generic applications. Such statements are not binding statements about the suitability of products for a particular application. It is the customer's responsibility to validate that a particular product with the properties described in the product specification is suitable for use in a particular application. Parameters provided in datasheets and / or specifications may vary in different applications and performance may vary over time. All operating parameters, including typical parameters, must be validated for each customer application by the customer's technical experts. Product specifications do not expand or otherwise modify Vishay's terms and conditions of purchase, including but not limited to the warranty expressed therein.

Hyperlinks included in this datasheet may direct users to third-party websites. These links are provided as a convenience and for informational purposes only. Inclusion of these hyperlinks does not constitute an endorsement or an approval by Vishay of any of the products, services or opinions of the corporation, organization or individual associated with the third-party website. Vishay disclaims any and all liability and bears no responsibility for the accuracy, legality or content of the third-party website or for that of subsequent links.

Except as expressly indicated in writing, Vishay products are not designed for use in medical, life-saving, or life-sustaining applications or for any other application in which the failure of the Vishay product could result in personal injury or death. Customers using or selling Vishay products not expressly indicated for use in such applications do so at their own risk. Please contact authorized Vishay personnel to obtain written terms and conditions regarding products designed for such applications.

No license, express or implied, by estoppel or otherwise, to any intellectual property rights is granted by this document or by any conduct of Vishay. Product names and markings noted herein may be trademarks of their respective owners.

© 2024 VISHAY INTERTECHNOLOGY, INC. ALL RIGHTS RESERVED