High Speed Optocoupler, 100 kBd, Low Input Current, High Gain

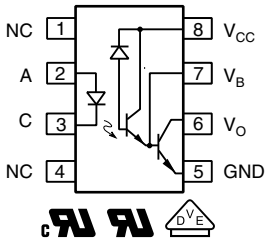

FEATURES

- High current transfer ratio, 300 %
- Low input current, 0.5 mA
- High output current, 60 mA
- TTL compatible output, V_{OL} = 0.1 V
- Adjustable bandwidth access to base
- Material categorization: for definitions of compliance please see www.vishay.com/doc?99912

Pb-free
e3
RoHS COMPLIANT

LINKS TO ADDITIONAL RESOURCES

Related Documents
3D Models
Design Tools

DESCRIPTION

The SFH6318 is ideal for TTL applications since the 300 % minimum current transfer ratio with an LED current of 1.6 mA enables operation with one unit load-in and one unit load-out with a 2.2 kΩ pull-up resistor.

The SFH6319 is best suited for low power logic applications involving CMOS and low power TTL. A 400 % current transfer ratio with only 0.5 mA of LED current is guaranteed from 0 °C to 70 °C.

Very high current ratio together with 4000 V_{RMS} isolation are achieved by coupling an LED with an integrated high gain photo detector in a SOIC-8 package. Separate pins for the photo diode and output stage enable TTL compatible saturation voltages with high speed operation. Photodarlington operation is achieved by tying the V_{CC} and V_O terminals together. Access to the base terminal allows adjustment to the gain bandwidth.

APPLICATIONS

- Logic ground isolation - TTL / TTL, TTL / CMOS, CMOS / CMOS, CMOS / TTL
- EIA RS 232C line receiver
- Low input current line receiver long lines, party lines
- Telephone ring detector
- Line voltage status indication - low input power dissipation
- Low power systems - ground isolation

AGENCY APPROVALS

- UL
- cUL
- DIN EN 60747-5-5 (VDE 0884-5), available with option 1

ORDERING INFORMATION

S	F	H	6	3	1	#	-	X	0	#	#	T
PART NUMBER								PACKAGE OPTION				TAPE AND REEL

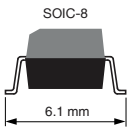

AGENCY CERTIFIED / PACKAGE	CTR (%)	
UL, cUL	**≥ 300**	**≥ 500**
SOIC-8	SFH6318T	SFH6319T

Note

- Additional options may be possible, please contact sales office

For technical questions, contact: optocoupleranswers@vishay.com
THIS DOCUMENT IS SUBJECT TO CHANGE WITHOUT NOTICE. THE PRODUCTS DESCRIBED HEREIN AND THIS DOCUMENT ARE SUBJECT TO SPECIFIC DISCLAIMERS, SET FORTH AT www.vishay.com/doc?91000

ABSOLUTE MAXIMUM RATINGS (T_{amb} = 25 °C, unless otherwise specified)					
PARAMETER	**TEST CONDITION**	**PART**	**SYMBOL**	**VALUE**	**UNIT**
INPUT					
Reverse voltage			V_R	3	V
Supply and output voltage	V_{CC} (pin 8 to 5), V_O (pin 6 to 5)	SFH6318	V_{CC}, V_O	-0.5 to 7	V
		SFH6319	V_{CC}, V_O	-0.5 to 18	V
Input power dissipation			P_{diss}	35	mW
Average input current			$I_{F(AVG)}$	20	mA
Peak input current	50 % duty cycle; 1 ms pulse width		I_{FRM}	40	mA
Peak transient input current	$t_p \leq 1$ µs, 300 pps		I_{FSM}	1	A
OUTPUT					
Output current (pin 6)			I_O	60	mA
Emitter-base reverse current (pin 5 to 7)			V_{EB0}	0.5	V
Output power dissipation			P_{diss}	150	mW
Derate linearly from 25 °C				2	mW/°C
COUPLER					
Storage temperature			T_{stg}	-55 to +125	°C
Lead soldering temperature	t = 10 s		T_{sld}	260	°C
Junction temperature			T_j	125	°C
Ambient temperature range			T_{amb}	-55 to +100	°C
Total power dissipation			P_{diss}	185	mW

Note

- Stresses in excess of the absolute maximum ratings can cause permanent damage to the device. Functional operation of the device is not implied at these or any other conditions in excess of those given in the operational sections of this document. Exposure to absolute maximum ratings for extended periods of the time can adversely affect reliability.

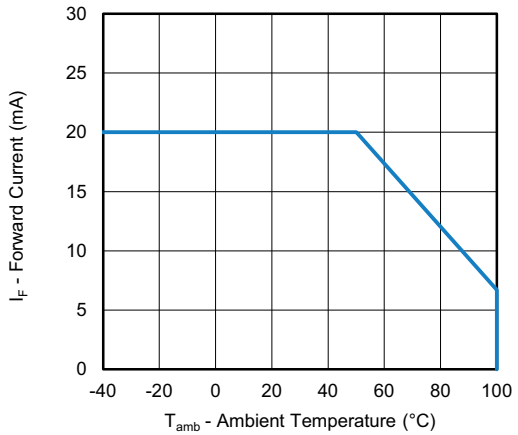

Fig. 1 - Forward Current vs. Ambient Temperature

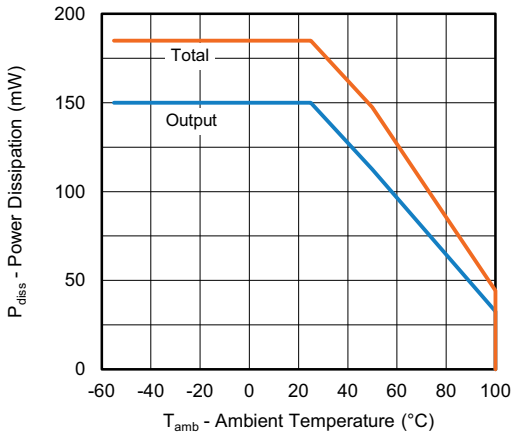

Fig. 2 - Power Dissipation vs. Ambient Temperature

For technical questions, contact: optocoupleranswers@vishay.com
THIS DOCUMENT IS SUBJECT TO CHANGE WITHOUT NOTICE. THE PRODUCTS DESCRIBED HEREIN AND THIS DOCUMENT ARE SUBJECT TO SPECIFIC DISCLAIMERS, SET FORTH AT www.vishay.com/doc?91000

ELECTRICAL CHARACTERISTICS (T_{amb} = 0 °C to 70 °C; typical values are at T_{amb} = 25 °C)						
PARAMETER	**TEST CONDITION**	**SYMBOL**	**MIN.**	**TYP.**	**MAX.**	**UNIT**
INPUT						
Forward voltage	I_F = 1.6 mA	V_F	-	1.28	1.7	V
Temperature coefficient of forward voltage	I_F = 1.6 mA	$\Delta V_F/\Delta T_{amb}$	-	-2.3	-	mV/°C
Input capacitance	f = 1 MHz, V_F = 0	C_{IN}	-	55	-	pF
OUTPUT						
Logic low output voltage [1]	I_F = 1.6 mA, I_O = 4.8 mA, V_{CC} = 4.5 V	V_{OL}	-	0.1	0.4	V
	I_F = 1.6 mA, I_O = 8 mA, V_{CC} = 4.5 V	V_{OL}	-	0.1	0.4	V
	I_F = 5 mA, I_O = 15 mA, V_{CC} = 4.5 V	V_{OL}	-	0.15	0.4	V
	I_F = 12 mA, I_O = 24 mA, V_{CC} = 4.5 V	V_{OL}	-	0.25	0.4	V
Logic high output current [1]	I_F = 0 mA, V_O = V_{CC} = 7 V	I_{IO}	-	0.1	250	µA
	I_F = 0 mA, V_O = V_{CC} = 18 V	I_{IO}	-	0.05	100	µA
Logic low supply current [1]	I_F = 1.6 mA, V_O = OPEN, V_{CC} = 18 V	I_{CCL}	-	0.3	1.5	mA
Logic high supply current [1]	I_F = 0 mA, V_O = OPEN, V_{CC} = 18 V	I_{CCH}	-	0.0003	10	µA
COUPLER						
Capacitance (input to output) [2]	f = 1 MHz	C_{IO}	-	0.6	-	pF

Notes

- Minimum and maximum values are testing requirements. Typical values are characteristics of the device and are the result of engineering evaluation. Typical values are for information only and are not part of the testing requirements.

[1] Pin 7 open

[2] Device considered a two-terminal device: pins 1, 2, 3, and 4 shorted together and pins 5, 6, 7, and 8 shorted together

CURRENT TRANSFER RATIO (T_{amb} = 0 °C to 70 °C; typical values are at T_{amb} = 25 °C)							
PARAMETER	**TEST CONDITION**	**PART**	**SYMBOL**	**MIN.**	**TYP.**	**MAX.**	**UNIT**
Current transfer ratio [1]	I_F = 1.6 mA, V_O = 0.4 V, V_{CC} = 4.5 V	SFH6318	CTR	300	2000	2600	%
	I_F = 0.5 mA, V_O = 0.4 V, V_{CC} = 4.5 V	SFH6319	CTR	400	2200	3500	%
	I_F = 1.6 mA, V_O = 0.4 V, V_{CC} = 4.5 V	SFH6319	CTR	500	2000	2600	%

Notes

- DC current transfer ratio is defined as the ratio of output collector current, I_O, to the forward LED input current, I_F times 100 %

[1] Pin 7 open

SWITCHING CHARACTERISTICS (T_{amb} = 25 °C)							
PARAMETER	**TEST CONDITION**	**PART**	**SYMBOL**	**MIN.**	**TYP.**	**MAX.**	**UNIT**
Propagation delay time to low output level	I_F = 1.6 mA, R_L = 2.2 kΩ	SFH6318	t_{PHL}	-	2	10	µs
Propagation delay time to low output level [1][2]	I_F = 0.5 mA, R_L = 4.7 kΩ	SFH6319	t_{PHL}	-	4	25	µs
Propagation delay time to high output level [1][2]	I_F = 12 mA, R_L = 270 Ω	SFH6319	t_{PHL}	-	0.5	1	µs
Propagation delay time to high output level	I_F = 1.6 mA, R_L = 2.2 kΩ	SFH6318	t_{PLH}	-	15	35	µs
Propagation delay time to high output level [1][2]	I_F = 0.5 mA, R_L = 4.7 kΩ	SFH6319	t_{PLH}	-	30	60	µs
Propagation delay time to high output level [1][2]	I_F = 12 mA, R_L = 270 Ω	SFH6319	t_{PLH}	-	3	7	µs

Notes

[1] Pin 7 open

[2] Using a resistor between pin 5 and 7 will decrease gain and delay time

For technical questions, contact: optocoupleranswers@vishay.com
THIS DOCUMENT IS SUBJECT TO CHANGE WITHOUT NOTICE. THE PRODUCTS DESCRIBED HEREIN AND THIS DOCUMENT ARE SUBJECT TO SPECIFIC DISCLAIMERS, SET FORTH AT www.vishay.com/doc?91000

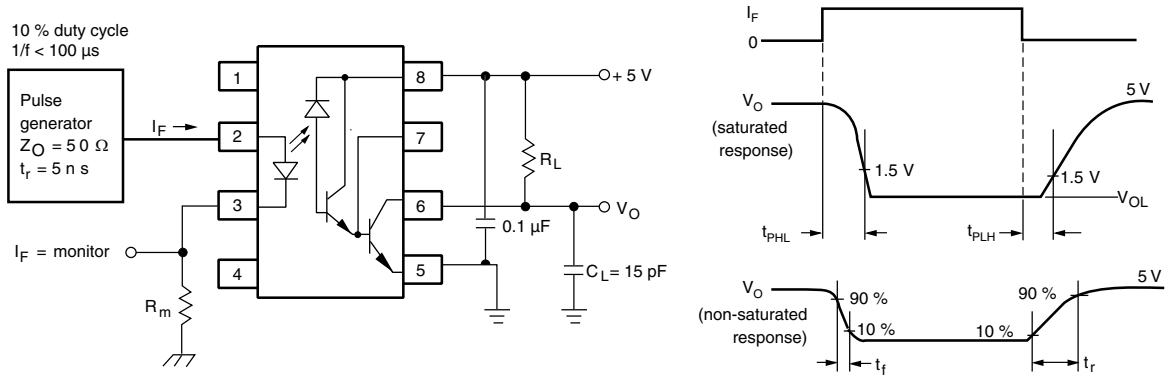

Fig. 3 - Switching Test Circuit

COMMON MODE TRANSIENT IMMUNITY (T_{amb} = 25 °C)						
PARAMETER	**TEST CONDITION**	**SYMBOL**	**MIN.**	**TYP.**	**MAX.**	**UNIT**
Common mode transient immunity at logic high level output (1)(2)	I_F = 0 mA, R_L = 2.2 kΩ, V_{CM} = 10 V_{PP}	$\|CM_H\|$	-	1000	-	V/µs
Common mode transient immunity at logic low level output (1)(2)	I_F = 1.6 mA, R_L = 2.2 kΩ, V_{CM} = 10 V_{PP}	$\|CM_L\|$	-	1000	-	V/µs

Notes

(1) Common mode transient immunity in logic high level is the maximum tolerable (positive) dV_{cm}/dt_{on} the leading edge of the common mode pulse, V_{CM}, to assure that the output will remain in a logic high state (i.e. V_O > 2 V) common mode transient immunity in logic low level is the maximum tolerable (negative) dV_{cm}/dt_{on} the trailing edge of the common mode pulse signal, V_{CM}, to assure that the output will remain in a logic low state (i.e.V_O < 0.8 V)

(2) In applications where dv/dt may exceed 50 000 V/µs (such as state discharge) a series resistor, R_{CC} should be included to protect I_C from destructively high surge currents. The recommended value is refer to Fig. 2.
$R_{CC} \cong [IV/(0.15 \times I_F\ (mA))]$ kΩ.

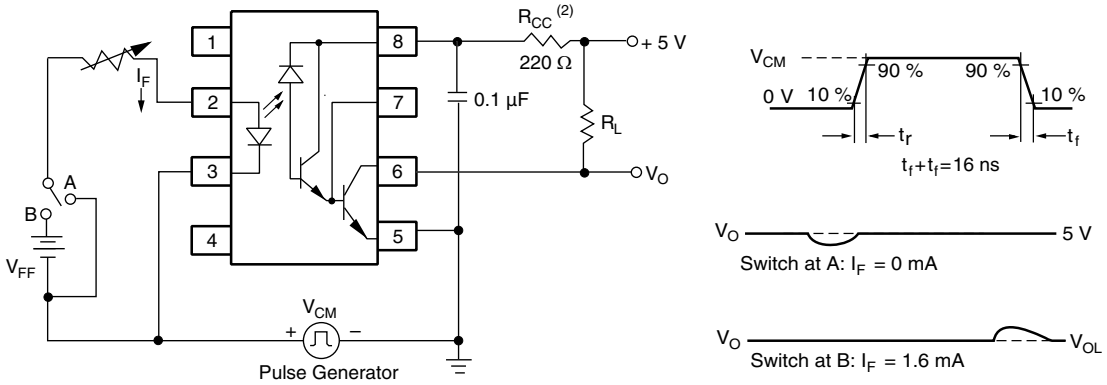

Fig. 4 - Test Circuit for Transient Immunity and Typical Waveforms

For technical questions, contact: optocoupleranswers@vishay.com
THIS DOCUMENT IS SUBJECT TO CHANGE WITHOUT NOTICE. THE PRODUCTS DESCRIBED HEREIN AND THIS DOCUMENT ARE SUBJECT TO SPECIFIC DISCLAIMERS, SET FORTH AT www.vishay.com/doc?91000

SAFETY AND INSULATION RATINGS (T_{amb} = 25 °C, unless otherwise specified)				
PARAMETER	**TEST CONDITION**	**SYMBOL**	**VALUE**	**UNIT**
Climatic classification	According to IEC 68 part 1		55 / 100 / 21	
Pollution degree	According to DIN VDE 0109		2	
Comparative tracking index	Insulation group IIIa	CTI	175	
Maximum rated withstanding isolation voltage	According to UL1577, t = 1 min	V_{ISO}	3333	V_{RMS}
Tested withstanding isolation voltage	According to UL1577, t = 1 s	V_{ISO}	4000	V_{RMS}
Maximum transient isolation voltage	According to DIN EN 60747-5-5	V_{IOTM}	6000	V_{peak}
Maximum repetitive peak isolation voltage	According to DIN EN 60747-5-5	V_{IORM}	560	V_{peak}
Isolation resistance	V_{IO} = 500 V, T_{amb} = 25 °C	R_{IO}	$\geq 10^{12}$	Ω
	V_{IO} = 500 V, T_{amb} = 100 °C	R_{IO}	$\geq 10^{11}$	Ω
	V_{IO} = 500 V, T_{amb} = T_S	R_{IO}	$\geq 10^{9}$	Ω
Output safety power		P_{SO}	350	mW
Input safety current		I_{SI}	150	mA
Safety temperature		T_S	165	°C
Creepage distance			≥ 4	mm
Clearance distance			≥ 4	mm
Insulation thickness		DTI	≥ 0.3	mm
Input to output test voltage, method B	V_{IORM} x 1.875 = V_{PR}, 100 % production test with t_M = 1 s, partial discharge < 5 pC	V_{PR}	1050	V_{peak}
Input to output test voltage, method A	V_{IORM} x 1.6 = V_{PR}, 100 % sample test with t_M = 10 s, partial discharge < 5 pC	V_{PR}	896	V_{peak}

Note

- As per IEC 60747-5-5, § 7.4.3.8.2, this optocoupler is suitable for “safe electrical insulation” only within the safety ratings. Compliance with the safety ratings shall be ensured by means of protective circuits.

For technical questions, contact: optocoupleranswers@vishay.com
THIS DOCUMENT IS SUBJECT TO CHANGE WITHOUT NOTICE. THE PRODUCTS DESCRIBED HEREIN AND THIS DOCUMENT ARE SUBJECT TO SPECIFIC DISCLAIMERS, SET FORTH AT www.vishay.com/doc?91000

TYPICAL CHARACTERISTICS (T_{amb} = 25 °C, unless otherwise specified)

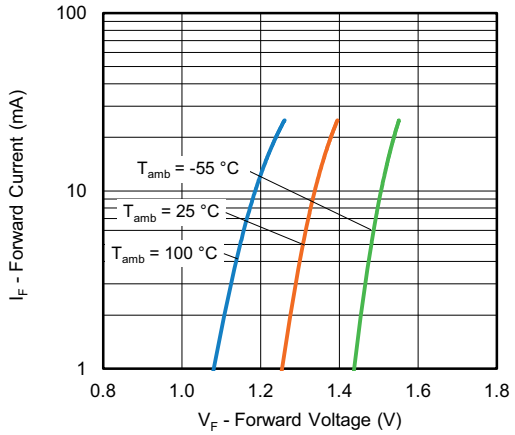

Fig. 5 - Forward Current vs. Forward Voltage

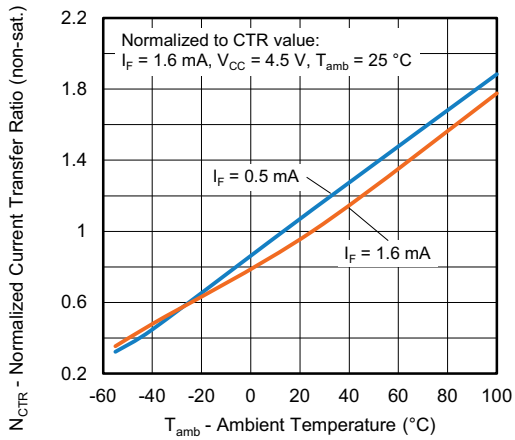

Fig. 6 - Normalized Current Transfer Ratio (non-saturated) vs. Ambient Temperature

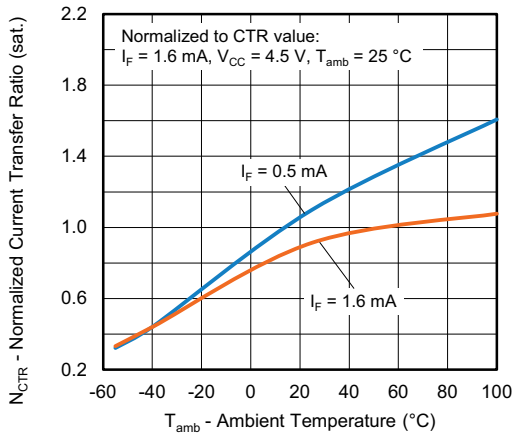

Fig. 7 - Normalized Current Transfer Ratio (saturated) vs. Ambient Temperature

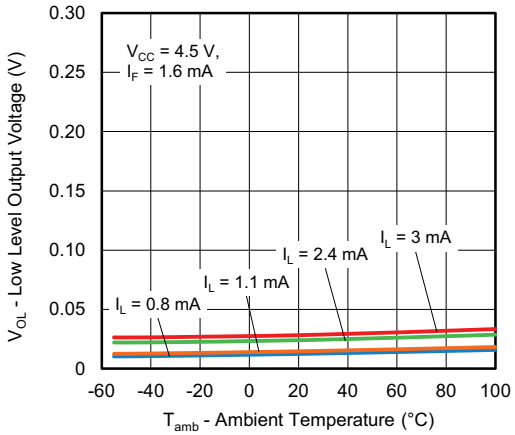

Fig. 8 - Low Level Output Voltage vs. Ambient Temperature

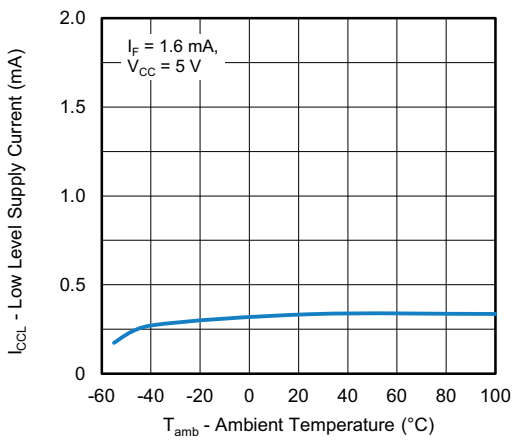

Fig. 9 - Low Level Supply Current vs. Ambient Temperature

For technical questions, contact: optocoupleranswers@vishay.com
THIS DOCUMENT IS SUBJECT TO CHANGE WITHOUT NOTICE. THE PRODUCTS DESCRIBED HEREIN AND THIS DOCUMENT ARE SUBJECT TO SPECIFIC DISCLAIMERS, SET FORTH AT www.vishay.com/doc?91000

PACKAGE DIMENSIONS (in millimeters)

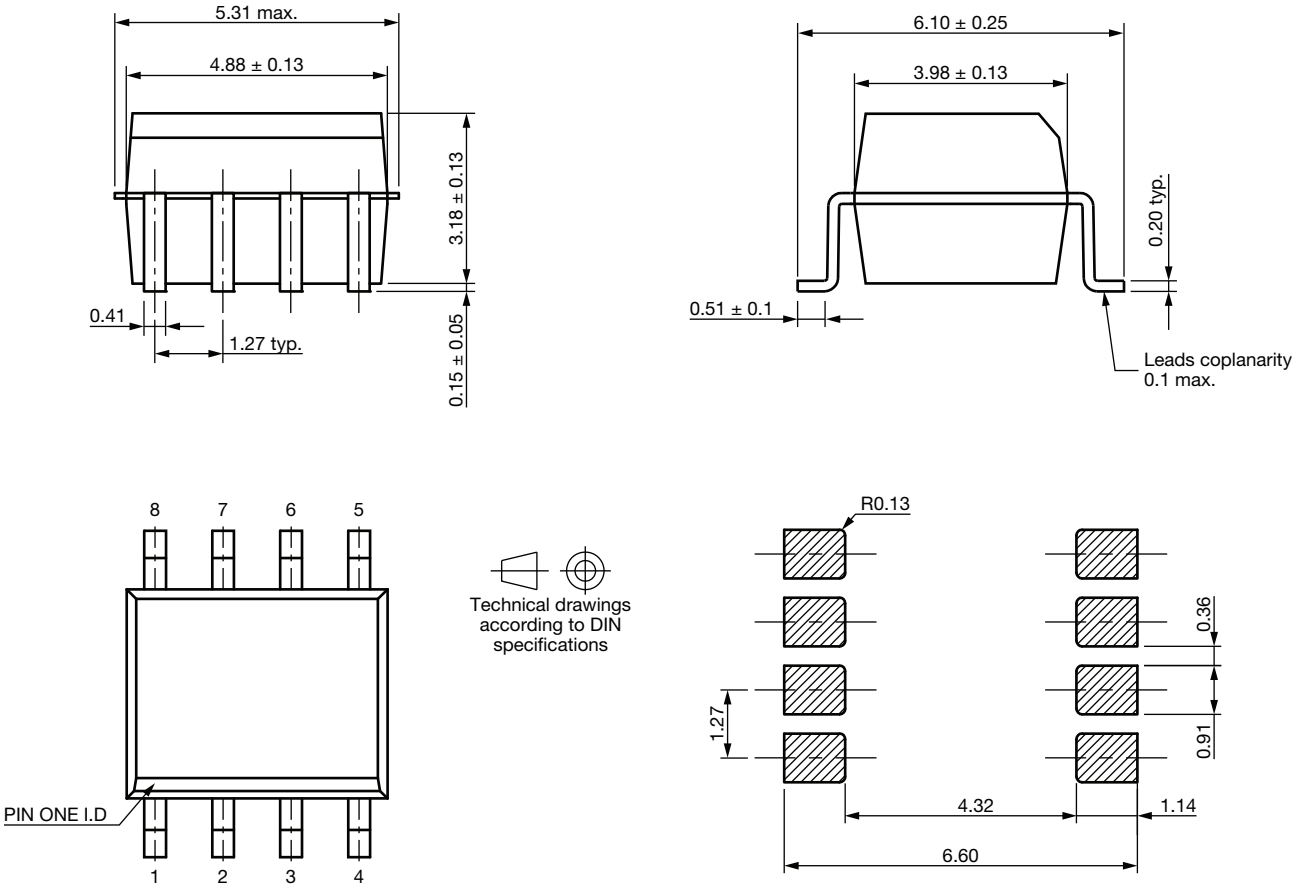

Fig. 10 - Package Drawing

PACKAGE MARKING

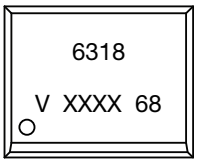

Fig. 11 - Example of SFH6138

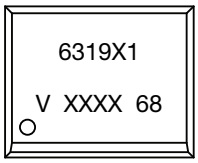

Fig. 12 - Example of SFH6319-X001T

Notes

- XXXX = LMC (lot marking code)
- “X1” is only marked on option 1 parts
- Tape and reel suffix (T) is not part of the package marking

For technical questions, contact: optocoupleranswers@vishay.com
THIS DOCUMENT IS SUBJECT TO CHANGE WITHOUT NOTICE. THE PRODUCTS DESCRIBED HEREIN AND THIS DOCUMENT ARE SUBJECT TO SPECIFIC DISCLAIMERS, SET FORTH AT www.vishay.com/doc?91000

PACKING INFORMATION (in millimeters)

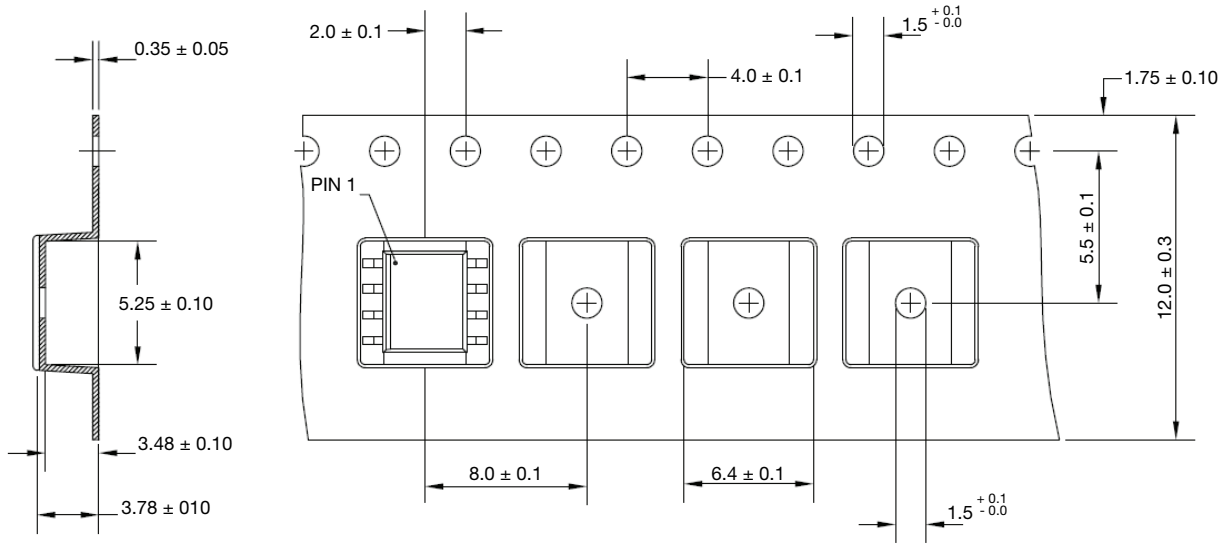

Fig. 13 - Tape and Reel Packing (2000 pieces on reel)

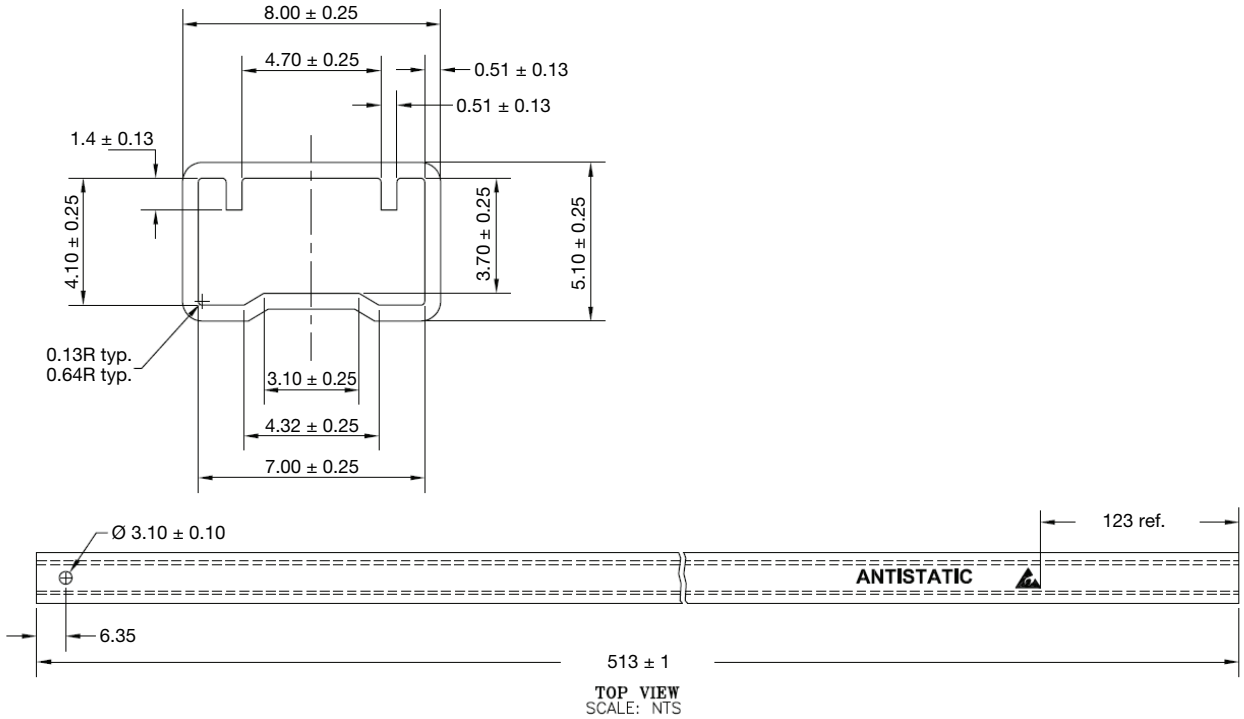

Fig. 14 - Tube Packing

DEVICE PER TUBE			
TYPE	**UNITS/TUBE**	**TUBES/BOX**	**UNITS/BOX**
SOIC-8	100	30	3000

For technical questions, contact: optocoupleranswers@vishay.com
THIS DOCUMENT IS SUBJECT TO CHANGE WITHOUT NOTICE. THE PRODUCTS DESCRIBED HEREIN AND THIS DOCUMENT ARE SUBJECT TO SPECIFIC DISCLAIMERS, SET FORTH AT www.vishay.com/doc?91000

SOLDER PROFILE

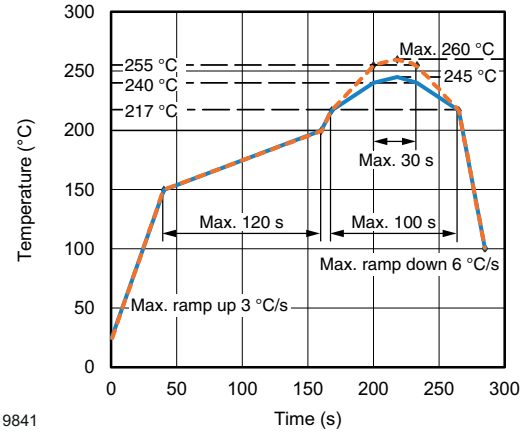

Fig. 15 - Lead (Pb)-free Reflow Solder Profile according to J-STD-020

HANDLING AND STORAGE CONDITIONS

ESD level: HBM class 2

Floor life: unlimited

Conditions: T_{amb} < 30 °C, RH < 85 %

Moisture sensitivity level 1, according to J-STD-020

For technical questions, contact: optocoupleranswers@vishay.com
THIS DOCUMENT IS SUBJECT TO CHANGE WITHOUT NOTICE. THE PRODUCTS DESCRIBED HEREIN AND THIS DOCUMENT ARE SUBJECT TO SPECIFIC DISCLAIMERS, SET FORTH AT www.vishay.com/doc?91000

Disclaimer

ALL PRODUCT, PRODUCT SPECIFICATIONS AND DATA ARE SUBJECT TO CHANGE WITHOUT NOTICE TO IMPROVE RELIABILITY, FUNCTION OR DESIGN OR OTHERWISE.

Vishay Intertechnology, Inc., its affiliates, agents, and employees, and all persons acting on its or their behalf (collectively, “Vishay”), disclaim any and all liability for any errors, inaccuracies or incompleteness contained in any datasheet or in any other disclosure relating to any product.

Vishay makes no warranty, representation or guarantee regarding the suitability of the products for any particular purpose or the continuing production of any product. To the maximum extent permitted by applicable law, Vishay disclaims (i) any and all liability arising out of the application or use of any product, (ii) any and all liability, including without limitation special, consequential or incidental damages, and (iii) any and all implied warranties, including warranties of fitness for particular purpose, non-infringement and merchantability.

Statements regarding the suitability of products for certain types of applications are based on Vishay's knowledge of typical requirements that are often placed on Vishay products in generic applications. Such statements are not binding statements about the suitability of products for a particular application. It is the customer's responsibility to validate that a particular product with the properties described in the product specification is suitable for use in a particular application. Parameters provided in datasheets and / or specifications may vary in different applications and performance may vary over time. All operating parameters, including typical parameters, must be validated for each customer application by the customer's technical experts. Product specifications do not expand or otherwise modify Vishay's terms and conditions of purchase, including but not limited to the warranty expressed therein.

Hyperlinks included in this datasheet may direct users to third-party websites. These links are provided as a convenience and for informational purposes only. Inclusion of these hyperlinks does not constitute an endorsement or an approval by Vishay of any of the products, services or opinions of the corporation, organization or individual associated with the third-party website. Vishay disclaims any and all liability and bears no responsibility for the accuracy, legality or content of the third-party website or for that of subsequent links.

Except as expressly indicated in writing, Vishay products are not designed for use in medical, life-saving, or life-sustaining applications or for any other application in which the failure of the Vishay product could result in personal injury or death. Customers using or selling Vishay products not expressly indicated for use in such applications do so at their own risk. Please contact authorized Vishay personnel to obtain written terms and conditions regarding products designed for such applications.

No license, express or implied, by estoppel or otherwise, to any intellectual property rights is granted by this document or by any conduct of Vishay. Product names and markings noted herein may be trademarks of their respective owners.

© 2024 VISHAY INTERTECHNOLOGY, INC. ALL RIGHTS RESERVED