Silicon NPN Phototransistor

VEMT2503X01

VEMT2523X01

FEATURES

- Package type: surface mount
- Package form: GW, RGW
- Dimensions (L x W x H in mm): 2.3 x 2.3 x 2.55
- AEC-Q101 qualified
- High radiant sensitivity
- Suitable for visible and near infrared radiation
- Fast response times
- Angle of half sensitivity: $\varphi = \pm 35°$
- Package matched with IR emitter series VSMB2943RGX01 and VSMB2943GX01
- Floor life: 4 weeks, MSL 2a, acc. J-STD-020
- Lead (Pb)-free reflow soldering
- Material categorization: For definitions of compliance please see www.vishay.com/doc?99912

AUTOMOTIVE GRADE
Pb-free
e3
RoHS COMPLIANT
HALOGEN FREE
GREEN (5-2008)

DESCRIPTION

VEMT2503X01 series are silicon NPN epitaxial planar phototransistors in a miniature dome lens, clear epoxy package for surface mounting. The device is sensitive to visible and near infrared radiation.

APPLICATIONS

- Detector in automotive applications
- Photo interrupters
- Miniature switches
- Counters
- Encoders
- Position sensors

PRODUCT SUMMARY

COMPONENT	I_{ca} (mA)	φ (deg)	$\lambda_{0.1}$ (nm)
VEMT2503X01	2.7	± 35	470 to 1090
VEMT2523X01	2.7	± 35	470 to 1090

Note

- Test condition see table “Basic Characteristics”

ORDERING INFORMATION

ORDERING CODE	PACKAGING	REMARKS	PACKAGE FORM
VEMT2503X01	Tape and reel	MOQ: 6000 pcs, 6000 pcs/reel	Reverse gullwing
VEMT2523X01	Tape and reel	MOQ: 6000 pcs, 6000 pcs/reel	Gullwing

Note

- MOQ: minimum order quantity

For technical questions, contact: detectortechsupport@vishay.com
THIS DOCUMENT IS SUBJECT TO CHANGE WITHOUT NOTICE. THE PRODUCTS DESCRIBED HEREIN AND THIS DOCUMENT ARE SUBJECT TO SPECIFIC DISCLAIMERS, SET FORTH AT www.vishay.com/doc?91000

ABSOLUTE MAXIMUM RATINGS (T_{amb} = 25 °C, unless otherwise specified)				
PARAMETER	**TEST CONDITION**	**SYMBOL**	**VALUE**	**UNIT**
Collector emitter voltage		V_{CEO}	20	V
Emitter collector voltage		V_{ECO}	7	V
Collector current		I_C	50	mA
Power power dissipation	$T_{amb} \leq 75$ °C	P_V	100	mW
Junction temperature		T_j	100	°C
Operating temperature range		T_{amb}	- 40 to + 100	°C
Storage temperature range		T_{stg}	- 40 to + 100	°C
Soldering temperature	Acc. reflow profile fig. 8	T_{sd}	260	°C
Thermal resistance junction/ambient	Acc. J-STD-051	R_{thJA}	250	K/W

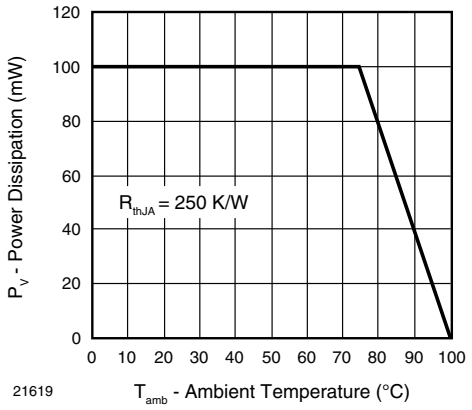

Fig. 1 - Power Dissipation Limit vs. Ambient Temperature

BASIC CHARACTERISTICS (T_{amb} = 25 °C, unless otherwise specified)						
PARAMETER	**TEST CONDITION**	**SYMBOL**	**MIN.**	**TYP.**	**MAX.**	**UNIT**
Collector emitter breakdown voltage	I_C = 0.1 mA	V_{CEO}	20			V
Collector dark current	V_{CE} = 5 V, E = 0	I_{CEO}		1	100	nA
Collector emitter capacitance	V_{CE} = 0 V, f = 1 MHz, E = 0	C_{CEO}		25		pF
Collector light current	E_e = 1 mW/cm^2, λ = 950 nm, V_{CE} = 5 V	I_{ca}	1.3	2.7	4.1	mA
Angle of half sensitivity		φ		± 35		deg
Wavelength of peak sensitivity		λ_p		850		nm
Range of spectral bandwidth		$\lambda_{0.1}$		470 to 1090		nm
Collector emitter saturation voltage	I_C = 0.05 mA	V_{CEsat}			0.4	V
Temperature coefficient of Ica	E_e = 1 mW/cm^2, λ = 950 nm, V_{CE} = 5 V	Tk_{Ica}		1.1		%/K

For technical questions, contact: detectortechsupport@vishay.com
THIS DOCUMENT IS SUBJECT TO CHANGE WITHOUT NOTICE. THE PRODUCTS DESCRIBED HEREIN AND THIS DOCUMENT ARE SUBJECT TO SPECIFIC DISCLAIMERS, SET FORTH AT www.vishay.com/doc?91000

BASIC CHARACTERISTICS (T_{amb} = 25 °C, unless otherwise specified)

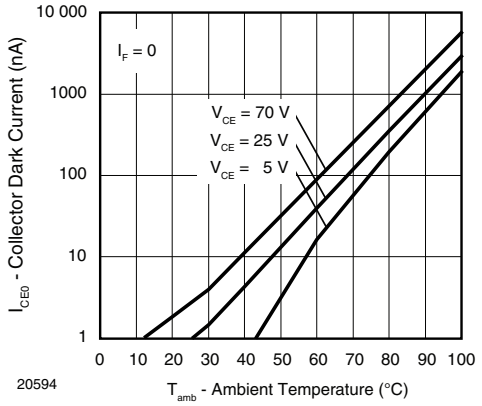

Fig. 2 - Collector Dark Current vs. Ambient Temperature

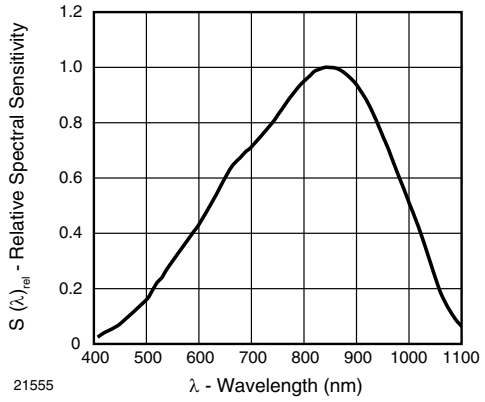

Fig. 5 - Relative Spectral Sensitivity vs. Wavelength

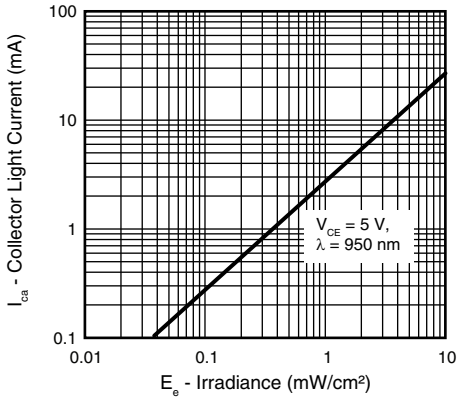

Fig. 3 - Collector Light Current vs. Irradiance

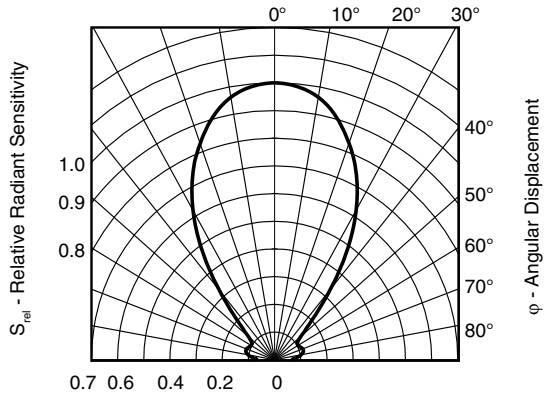

Fig. 6 - Relative Radiant Sensitivity vs. Angular Displacement

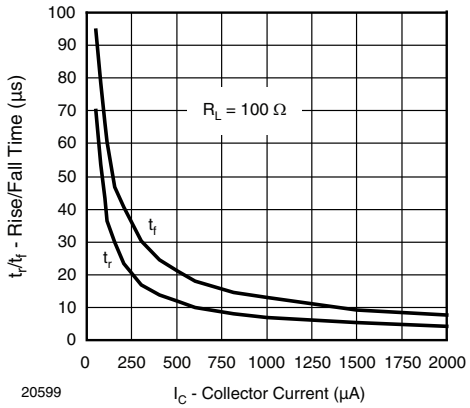

Fig. 4 - Rise/Fall Time vs. Collector Current

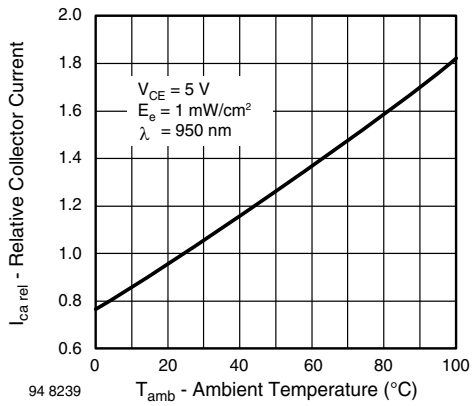

Fig. 7 - Relative Collector Current vs. Ambient Temperature

For technical questions, contact: detectortechsupport@vishay.com
THIS DOCUMENT IS SUBJECT TO CHANGE WITHOUT NOTICE. THE PRODUCTS DESCRIBED HEREIN AND THIS DOCUMENT ARE SUBJECT TO SPECIFIC DISCLAIMERS, SET FORTH AT www.vishay.com/doc?91000

REFLOW SOLDER PROFILE

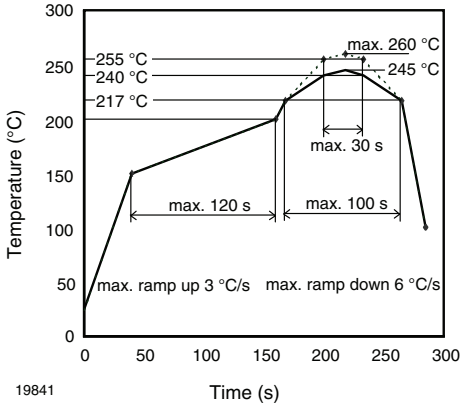

Fig. 8 - Lead (Pb)-free Reflow Solder Profile acc. J-STD-020

DRYPACK

Devices are packed in moisture barrier bags (MBB) to prevent the products from moisture absorption during transportation and storage. Each bag contains a desiccant.

FLOOR LIFE

Floor life (time between soldering and removing from MBB) must not exceed the time indicated on MBB label:
Floor life: 4 weeks
Conditions: T_{amb} < 30 °C, RH < 60 %
Moisture sensitivity level 2a, acc. to J-STD-020.

DRYING

In case of moisture absorption devices should be baked before soldering. Conditions see J-STD-020 or label. Devices taped on reel dry using recommended conditions 192 h at 40 °C (+ 5 °C), RH < 5 %.

PACKAGE DIMENSIONS VEMT2503X01 in millimeters

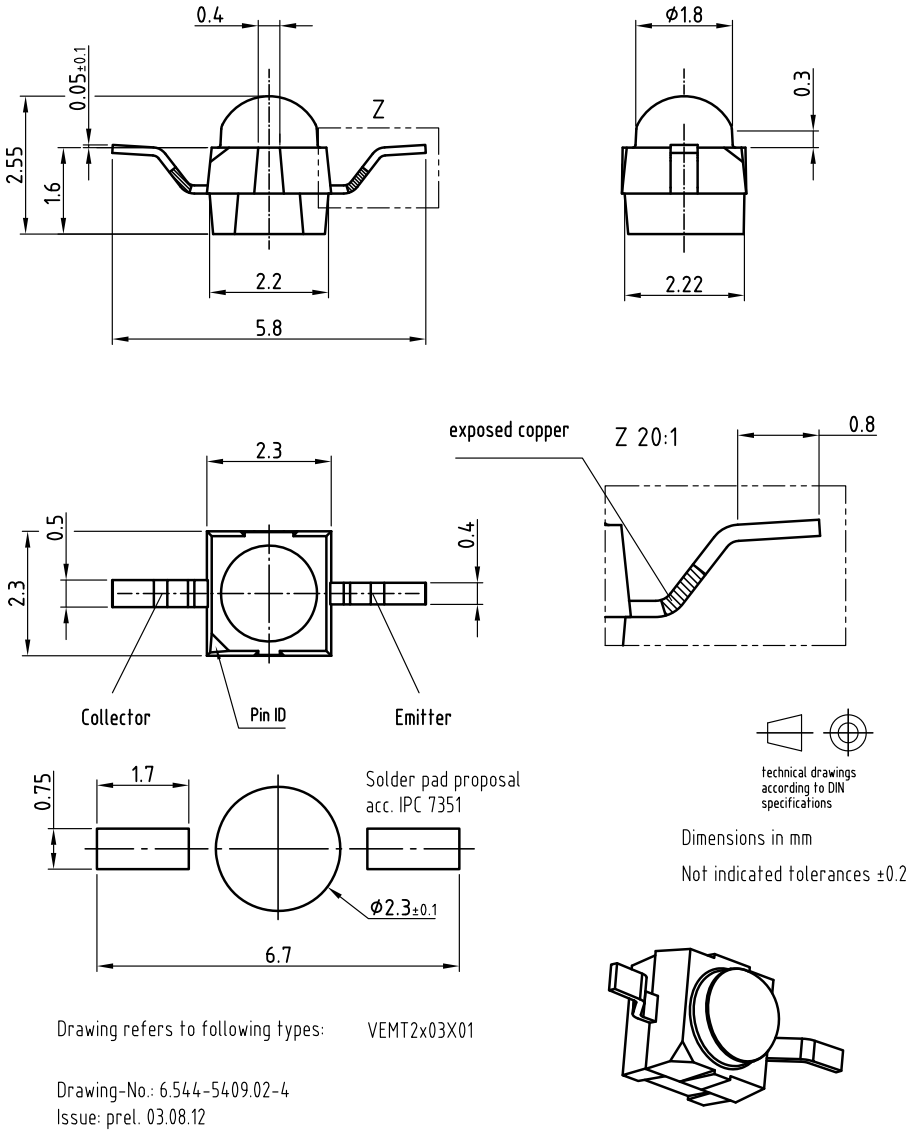

For technical questions, contact: detectortechsupport@vishay.com
THIS DOCUMENT IS SUBJECT TO CHANGE WITHOUT NOTICE. THE PRODUCTS DESCRIBED HEREIN AND THIS DOCUMENT ARE SUBJECT TO SPECIFIC DISCLAIMERS, SET FORTH AT www.vishay.com/doc?91000

PACKAGE DIMENSIONS VEMT2523X01 in millimeters

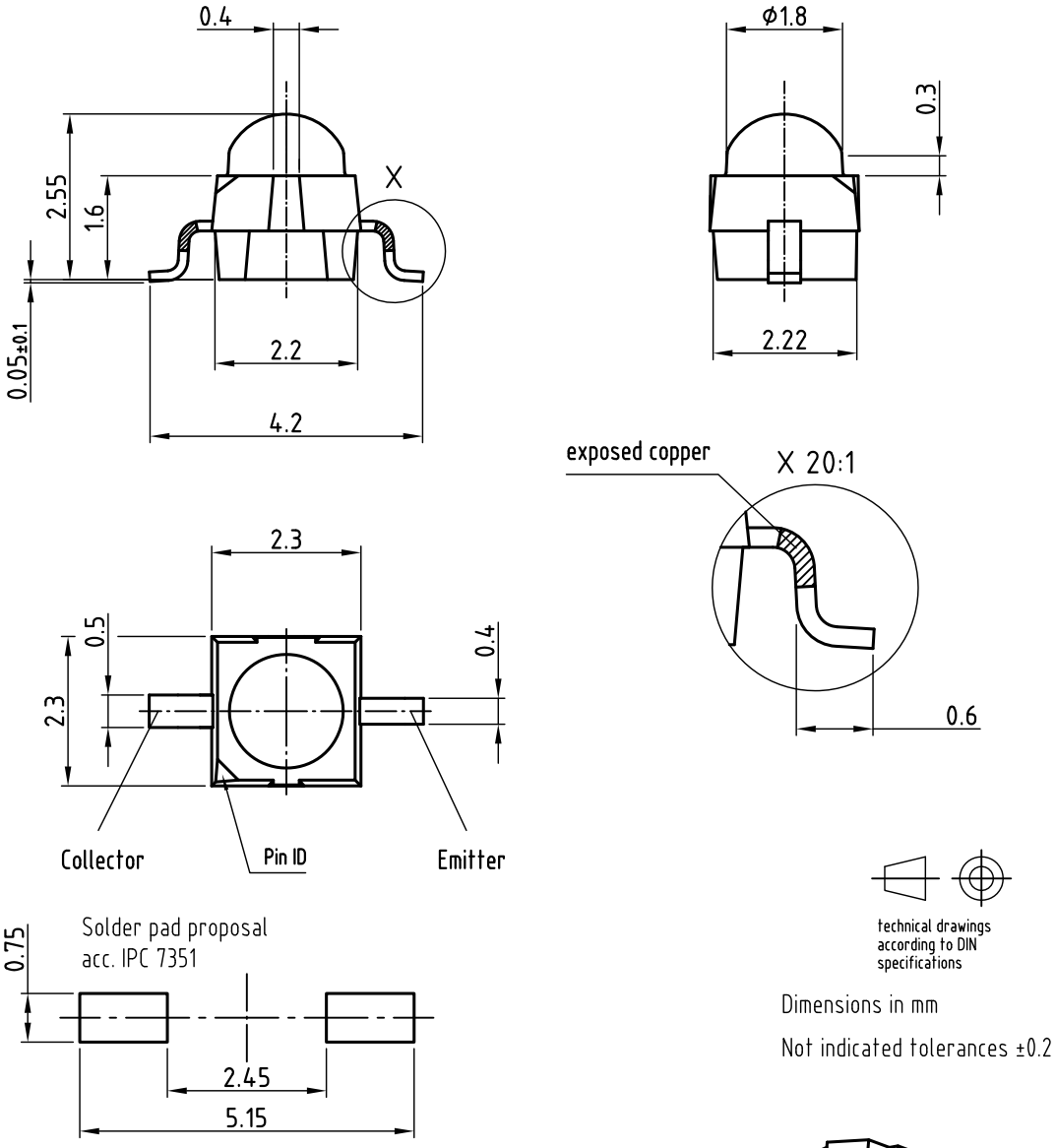

Dimensions in mm

Not indicated tolerances ±0.2

Drawing refers to following types: VEMT2x23X01

Drawing-No.: 6.544-5408.02-4
Issue: prel; 03.08.12

For technical questions, contact: detectortechsupport@vishay.com
THIS DOCUMENT IS SUBJECT TO CHANGE WITHOUT NOTICE. THE PRODUCTS DESCRIBED HEREIN AND THIS DOCUMENT ARE SUBJECT TO SPECIFIC DISCLAIMERS, SET FORTH AT www.vishay.com/doc?91000

TAPE AND REEL DIMENSIONS VEMT2503X01 in millimeters

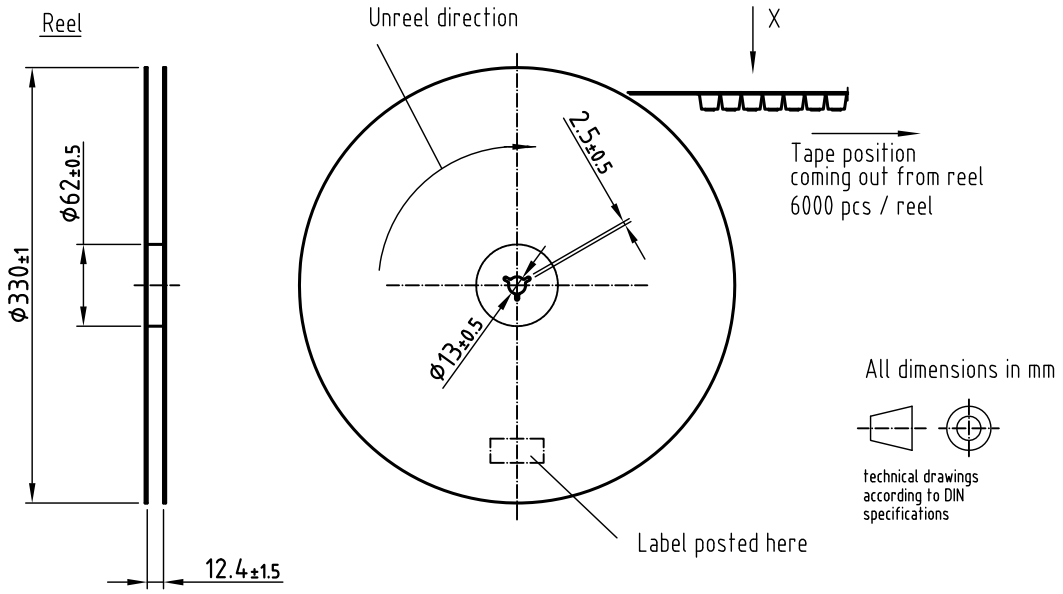

Leader and trailer tape:

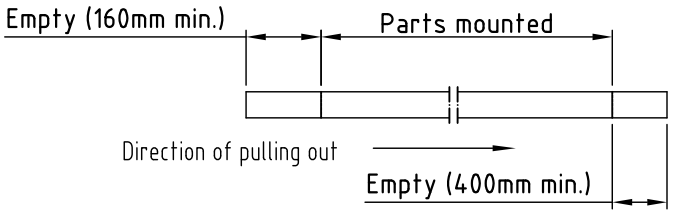

Terminal position in tape

Device	Lead I	Lead II
VSMB2943RGX01	Cathode	Anode
VSMF2893RGX01		
VEMD2x03X01		
VEMT2x03X01	Collector	Emitter
VSMY2853RG	Anode	Cathode

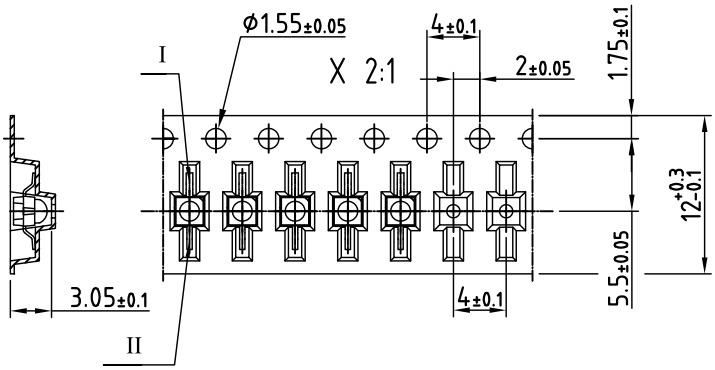

Drawing refers to following types: see table
Reel dimensions and tape

Drawing-No.: 9.800-5100.02-4
Issue: prel; 03.08.12

For technical questions, contact: detectortechsupport@vishay.com
THIS DOCUMENT IS SUBJECT TO CHANGE WITHOUT NOTICE. THE PRODUCTS DESCRIBED HEREIN AND THIS DOCUMENT ARE SUBJECT TO SPECIFIC DISCLAIMERS, SET FORTH AT www.vishay.com/doc?91000

TAPE AND REEL DIMENSIONS VEMT2523X01 in millimeters

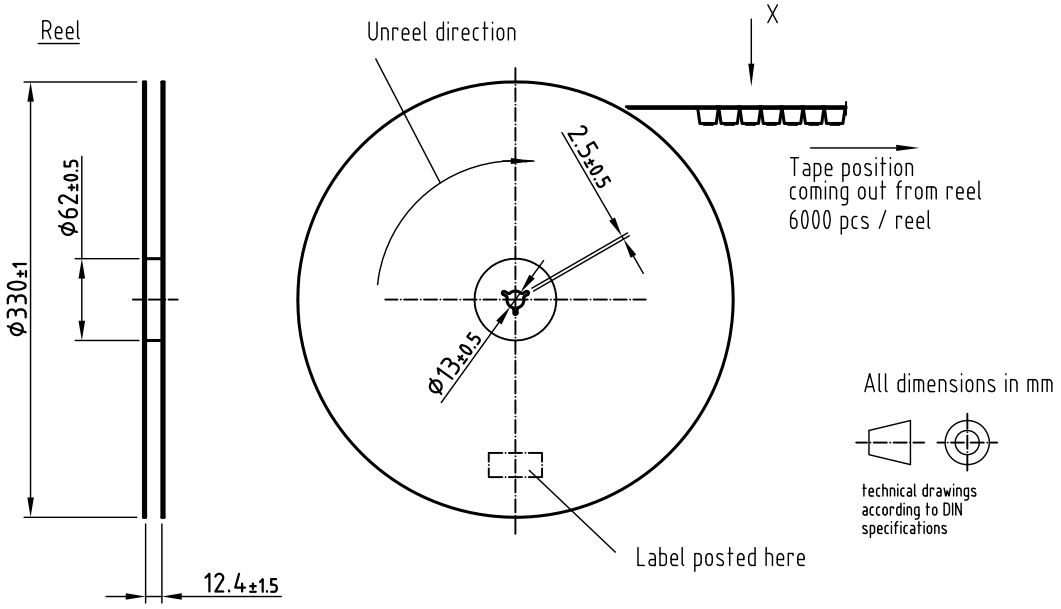

Leader and trailer tape:

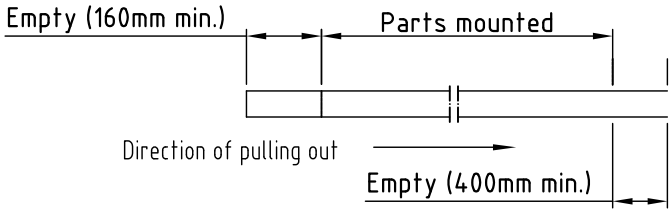

Terminal position in tape

Device	Lead I	Lead II
VSMB2943GX01	Cathode	Anode
VSMF2893GX01		
VEMD2x23X01		
VEMT2x23X01	Collector	Emitter
VSMY2853G	Anode	Cathode

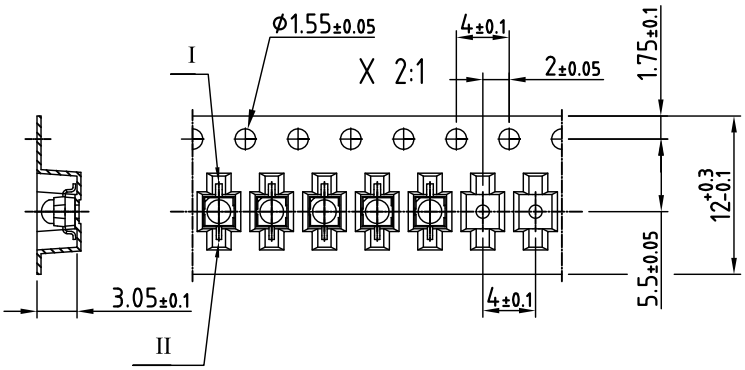

Drawing refers to following types: see table
Reel dimensions and tape

Drawing-No.: 9.800-5091.21-4
Issue: prel; 03.08.12

For technical questions, contact: detectortechsupport@vishay.com
THIS DOCUMENT IS SUBJECT TO CHANGE WITHOUT NOTICE. THE PRODUCTS DESCRIBED HEREIN AND THIS DOCUMENT ARE SUBJECT TO SPECIFIC DISCLAIMERS, SET FORTH AT www.vishay.com/doc?91000

Disclaimer

ALL PRODUCT, PRODUCT SPECIFICATIONS AND DATA ARE SUBJECT TO CHANGE WITHOUT NOTICE TO IMPROVE RELIABILITY, FUNCTION OR DESIGN OR OTHERWISE.

Vishay Intertechnology, Inc., its affiliates, agents, and employees, and all persons acting on its or their behalf (collectively, “Vishay”), disclaim any and all liability for any errors, inaccuracies or incompleteness contained in any datasheet or in any other disclosure relating to any product.

Vishay makes no warranty, representation or guarantee regarding the suitability of the products for any particular purpose or the continuing production of any product. To the maximum extent permitted by applicable law, Vishay disclaims (i) any and all liability arising out of the application or use of any product, (ii) any and all liability, including without limitation special, consequential or incidental damages, and (iii) any and all implied warranties, including warranties of fitness for particular purpose, non-infringement and merchantability.

Statements regarding the suitability of products for certain types of applications are based on Vishay's knowledge of typical requirements that are often placed on Vishay products in generic applications. Such statements are not binding statements about the suitability of products for a particular application. It is the customer's responsibility to validate that a particular product with the properties described in the product specification is suitable for use in a particular application. Parameters provided in datasheets and / or specifications may vary in different applications and performance may vary over time. All operating parameters, including typical parameters, must be validated for each customer application by the customer's technical experts. Product specifications do not expand or otherwise modify Vishay's terms and conditions of purchase, including but not limited to the warranty expressed therein.

Hyperlinks included in this datasheet may direct users to third-party websites. These links are provided as a convenience and for informational purposes only. Inclusion of these hyperlinks does not constitute an endorsement or an approval by Vishay of any of the products, services or opinions of the corporation, organization or individual associated with the third-party website. Vishay disclaims any and all liability and bears no responsibility for the accuracy, legality or content of the third-party website or for that of subsequent links.

Except as expressly indicated in writing, Vishay products are not designed for use in medical, life-saving, or life-sustaining applications or for any other application in which the failure of the Vishay product could result in personal injury or death. Customers using or selling Vishay products not expressly indicated for use in such applications do so at their own risk. Please contact authorized Vishay personnel to obtain written terms and conditions regarding products designed for such applications.

No license, express or implied, by estoppel or otherwise, to any intellectual property rights is granted by this document or by any conduct of Vishay. Product names and markings noted herein may be trademarks of their respective owners.

© 2024 VISHAY INTERTECHNOLOGY, INC. ALL RIGHTS RESERVED