Small Signal Schottky Diodes, Single and Dual

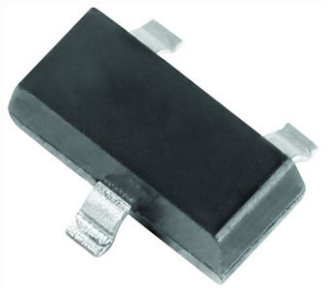

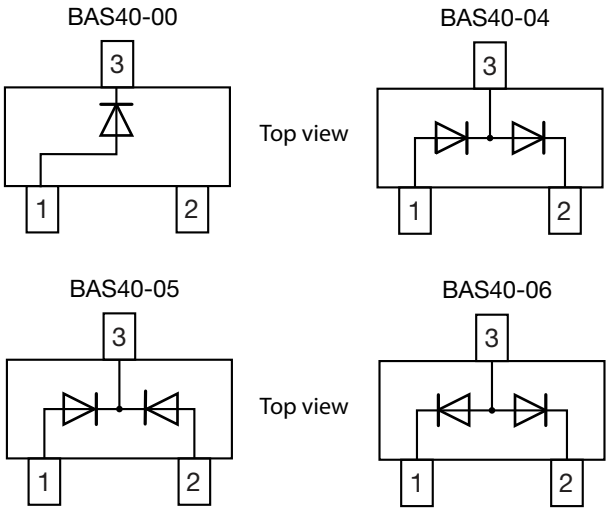

FEATURES

- These diodes feature very low turn-on voltage and fast switching
- These devices are protected by a PN junction guardring against excessive voltage, such as electrostatic discharges
- AEC-Q101 qualified available
- Molding compound meets UL 94 V-0 flammability rating
- Moisture Sensitivity Level (MSL) 1
- Base P/N-E3 - RoHS-compliant, commercial grade
- Base P/N-HE3 - RoHS-compliant, AEC-Q101 qualified
- Material categorization: for definitions of compliance please see www.vishay.com/doc?99912

AUTOMOTIVE GRADE Available

Pb-free

e3

RoHS COMPLIANT

MECHANICAL DATA

Case: SOT-23

Weight: approx. 9.2 mg

Packaging codes / options:

18/10K per 13" reel (8 mm tape), 10K/box

08/3K per 7" reel (8 mm tape), 15K/box

LINKS TO ADDITIONAL RESOURCES

3D Models | Models | Marking | Parametric Search | Order Samples

PARTS TABLE

PART	ORDERING CODE	AEC-Q101 QUALIFIED	TYPE MARKING	CIRCUIT CONFIGURATION	TAPED UNITS PER REEL	MINIMUM ORDER QUANTITY
BAS40-00	BAS40-00-E3-08	no	43G	Single	3 000 (8 mm tape on 7" reel)	15 000
	BAS40-00-HE3_A-08	yes				
	BAS40-00-E3-18	no			10 000 (8 mm tape on 13" reel)	10 000
	BAS40-00-HE3_A-18	yes				
BAS40-04	BAS40-04-E3-08	no	44G	Dual serial	3 000 (8 mm tape on 7" reel)	15 000
	BAS40-04-HE3_A-08	yes				
	BAS40-04-E3-18	no			10 000 (8 mm tape on 13" reel)	10 000
	BAS40-04-HE3_A-18	yes				
BAS40-05	BAS40-05-E3-08	no	45G	Common cathode	3 000 (8 mm tape on 7" reel)	15 000
	BAS40-05-HE3_A-08	yes				
	BAS40-05-E3-18	no			10 000 (8 mm tape on 13" reel)	10 000
	BAS40-05-HE3_A-18	yes				
BAS40-06	BAS40-06-E3-08	no	46G	Common anode	3 000 (8 mm tape on 7" reel)	15 000
	BAS40-06-HE3_A-08	yes				
	BAS40-06-E3-18	no			10 000 (8 mm tape on 13" reel)	10 000
	BAS40-06-HE3_A-18	yes				

For technical questions within your region: DiodesAmericas@vishay.com, DiodesAsia@vishay.com, DiodesEurope@vishay.com

THIS DOCUMENT IS SUBJECT TO CHANGE WITHOUT NOTICE. THE PRODUCTS DESCRIBED HEREIN AND THIS DOCUMENT ARE SUBJECT TO SPECIFIC DISCLAIMERS, SET FORTH AT www.vishay.com/doc?91000

PACKAGE				
PACKAGE NAME	WEIGHT	MOLDING COMPOUND FLAMMABILITY RATING	MOISTURE SENSITIVITY LEVEL	SOLDERING CONDITIONS
SOT-23	9.2 mg	UL 94 V-0	MSL 1 (according J-STD-020)	Peak temperature max. 260 °C

ABSOLUTE MAXIMUM RATINGS (T_{amb} = 25 °C, unless otherwise specified)				
PARAMETER	TEST CONDITION	SYMBOL	VALUE	UNIT
Repetitive peak reverse voltage		$V_{RRM} = V_{RWM} = V_R$	40	V
Forward continuous current [1]		I_F	200	mA
Surge forward current [1]	$t_p < 1$ s	I_{FSM}	600	mA
Power dissipation	on FR-4 board with recommended soldering footprint	P_{tot}	220	mW
	Infinite heatsink		310	mW

Note

[1] Infinite heatsink

THERMAL CHARACTERISTICS (T_{amb} = 25 °C, unless otherwise specified)				
PARAMETER	TEST CONDITION	SYMBOL	VALUE	UNIT
Thermal resistance junction to ambient air	according to JEDEC® 51-3 on FR-4 board with recommended soldering footprint	R_{thJA}	460	K/W
Thermal resistance junction lead	Infinite heatsink	R_{thJL}	320	K/W
Maximum junction temperature		T_j	125	°C
Storage temperature range		T_{stg}	-65 to +150	°C
Operating temperature range		T_{op}	-55 to +125	°C

ELECTRICAL CHARACTERISTICS (T_{amb} = 25 °C, unless otherwise specified)						
PARAMETER	TEST CONDITION	SYMBOL	MIN.	TYP.	MAX.	UNIT
Reverse breakdown voltage	I_R = 10 μA (pulsed)	V_{BR}	40			V
Leakage current	V_R = 30 V	I_R		20	100	nA
Forward voltage	I_F = 1 mA	V_F			380	mV
Forward voltage [1]	I_F = 50 mA	V_F			1	V
Diode capacitance	V_R = 0; f = 1 MHz	C_D		2.5	5	pF
Reverse recovery time	$I_F = I_R$ = 10 mA, i_R = 1 mA, R_L = 100 Ω	t_{rr}			5	ns

Note

[1] Pulse test t_p < 300μs

For technical questions within your region: DiodesAmericas@vishay.com, DiodesAsia@vishay.com, DiodesEurope@vishay.com
THIS DOCUMENT IS SUBJECT TO CHANGE WITHOUT NOTICE. THE PRODUCTS DESCRIBED HEREIN AND THIS DOCUMENT ARE SUBJECT TO SPECIFIC DISCLAIMERS, SET FORTH AT www.vishay.com/doc?91000

TYPICAL CHARACTERISTICS (T_{amb} = 25 °C, unless otherwise specified)

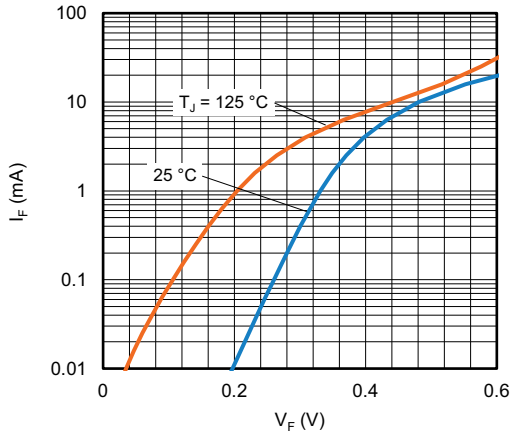

Fig. 1 - Typical Forward Current vs. Forward Voltage

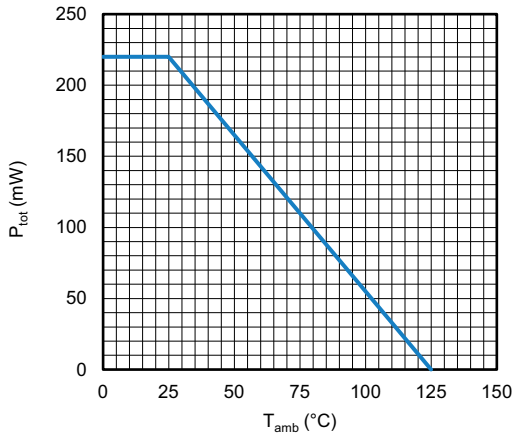

Fig. 2 - Admissible Power Dissipation vs. Ambient Temperature

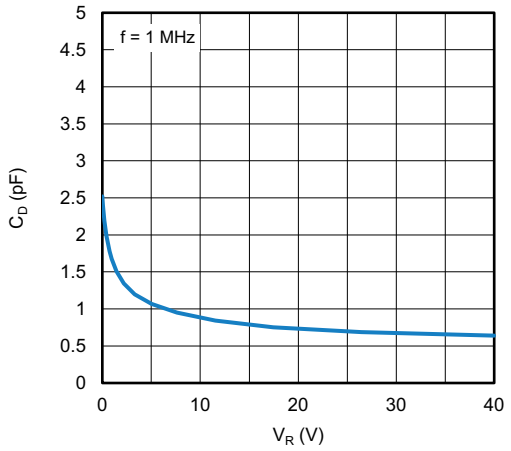

Fig. 3 - Typical Capacitance vs. Reverse Voltage

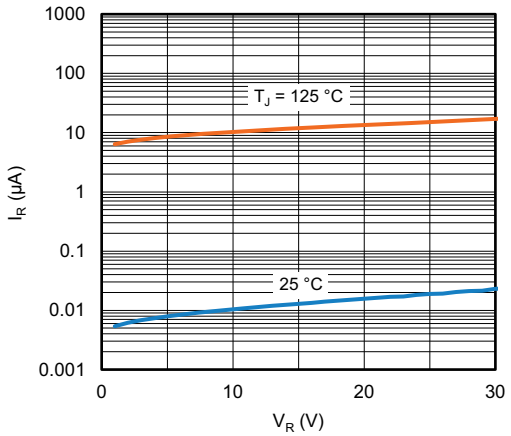

Fig. 4 - Typical Reverse Leakage Current vs. Reverse Voltage

For technical questions within your region: DiodesAmericas@vishay.com, DiodesAsia@vishay.com, DiodesEurope@vishay.com
THIS DOCUMENT IS SUBJECT TO CHANGE WITHOUT NOTICE. THE PRODUCTS DESCRIBED HEREIN AND THIS DOCUMENT ARE SUBJECT TO SPECIFIC DISCLAIMERS, SET FORTH AT www.vishay.com/doc?91000

PACKAGE DIMENSIONS in millimeters: **SOT-23**

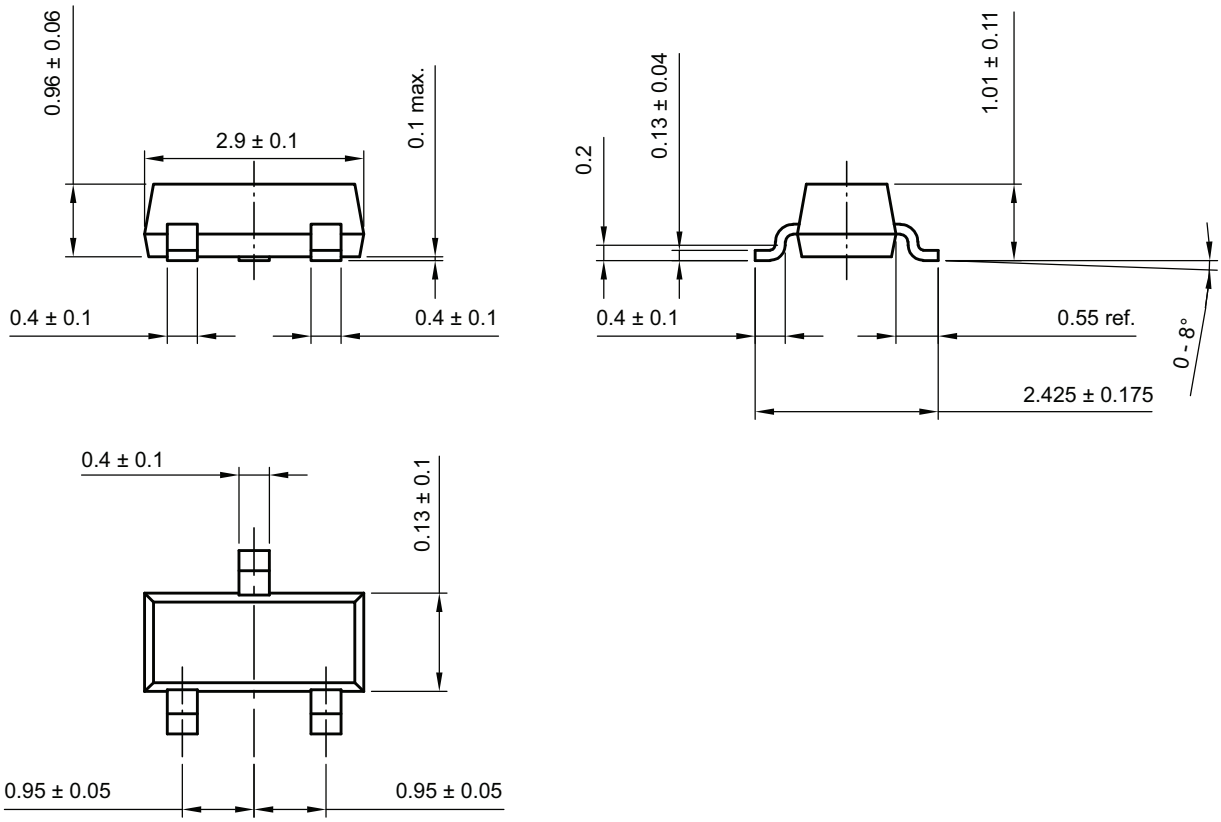

footprint recommendation:

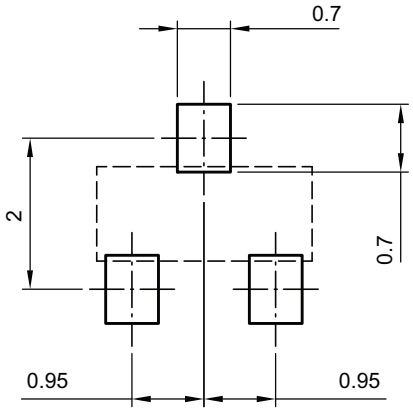

Created - Date: 18-Oct-2021
Rev. 01 - Date: 18-Jan-2022
S8-V-3929.01-009 (4)

For technical questions within your region: DiodesAmericas@vishay.com, DiodesAsia@vishay.com, DiodesEurope@vishay.com
THIS DOCUMENT IS SUBJECT TO CHANGE WITHOUT NOTICE. THE PRODUCTS DESCRIBED HEREIN AND THIS DOCUMENT ARE SUBJECT TO SPECIFIC DISCLAIMERS, SET FORTH AT www.vishay.com/doc?91000

CARRIER TAPE SOT-23

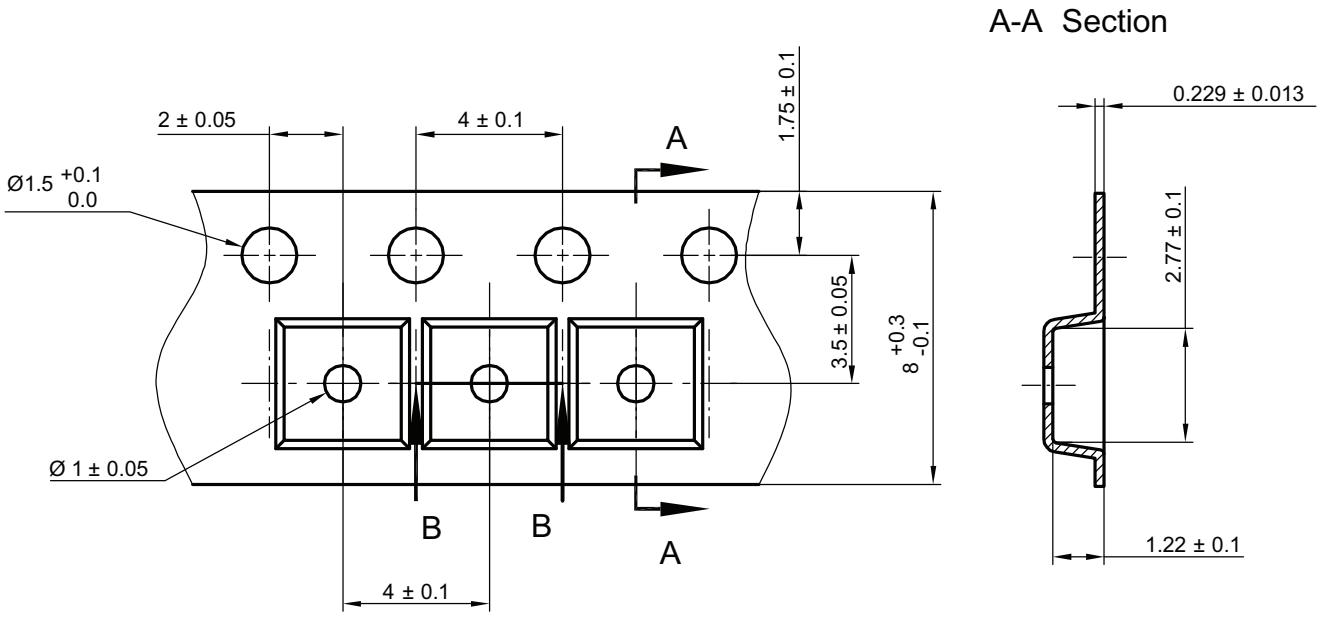

B-B Section

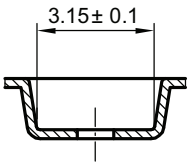

Created Date: 04-Feb-2010
Rev. Date: 07-Feb-2022
S8-V-3929.01-005 (4)

ORIENTATION IN CARRIER TAPE SOT-23

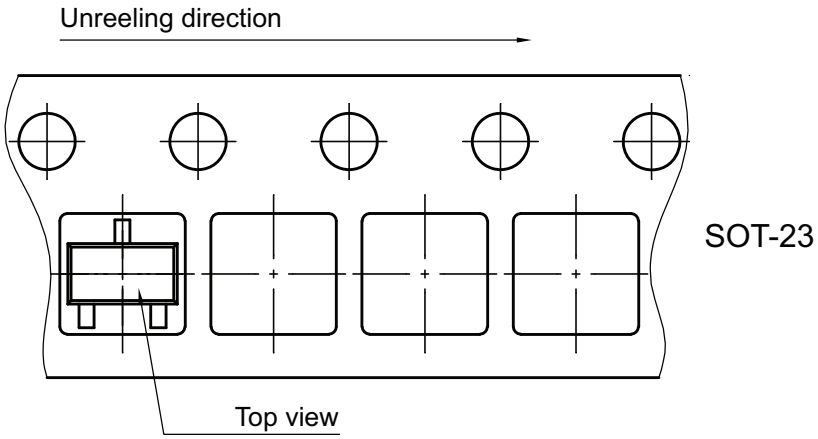

Created Date: 04-Feb-2010
Rev. Date: 07-Nov-2022
S8-V-3929.01-005 (4)

For technical questions within your region: DiodesAmericas@vishay.com, DiodesAsia@vishay.com, DiodesEurope@vishay.com
THIS DOCUMENT IS SUBJECT TO CHANGE WITHOUT NOTICE. THE PRODUCTS DESCRIBED HEREIN AND THIS DOCUMENT ARE SUBJECT TO SPECIFIC DISCLAIMERS, SET FORTH AT www.vishay.com/doc?91000

Disclaimer

ALL PRODUCT, PRODUCT SPECIFICATIONS AND DATA ARE SUBJECT TO CHANGE WITHOUT NOTICE TO IMPROVE RELIABILITY, FUNCTION OR DESIGN OR OTHERWISE.

Vishay Intertechnology, Inc., its affiliates, agents, and employees, and all persons acting on its or their behalf (collectively, “Vishay”), disclaim any and all liability for any errors, inaccuracies or incompleteness contained in any datasheet or in any other disclosure relating to any product.

Vishay makes no warranty, representation or guarantee regarding the suitability of the products for any particular purpose or the continuing production of any product. To the maximum extent permitted by applicable law, Vishay disclaims (i) any and all liability arising out of the application or use of any product, (ii) any and all liability, including without limitation special, consequential or incidental damages, and (iii) any and all implied warranties, including warranties of fitness for particular purpose, non-infringement and merchantability.

Statements regarding the suitability of products for certain types of applications are based on Vishay's knowledge of typical requirements that are often placed on Vishay products in generic applications. Such statements are not binding statements about the suitability of products for a particular application. It is the customer's responsibility to validate that a particular product with the properties described in the product specification is suitable for use in a particular application. Parameters provided in datasheets and / or specifications may vary in different applications and performance may vary over time. All operating parameters, including typical parameters, must be validated for each customer application by the customer's technical experts. Product specifications do not expand or otherwise modify Vishay's terms and conditions of purchase, including but not limited to the warranty expressed therein.

Hyperlinks included in this datasheet may direct users to third-party websites. These links are provided as a convenience and for informational purposes only. Inclusion of these hyperlinks does not constitute an endorsement or an approval by Vishay of any of the products, services or opinions of the corporation, organization or individual associated with the third-party website. Vishay disclaims any and all liability and bears no responsibility for the accuracy, legality or content of the third-party website or for that of subsequent links.

Except as expressly indicated in writing, Vishay products are not designed for use in medical, life-saving, or life-sustaining applications or for any other application in which the failure of the Vishay product could result in personal injury or death. Customers using or selling Vishay products not expressly indicated for use in such applications do so at their own risk. Please contact authorized Vishay personnel to obtain written terms and conditions regarding products designed for such applications.

No license, express or implied, by estoppel or otherwise, to any intellectual property rights is granted by this document or by any conduct of Vishay. Product names and markings noted herein may be trademarks of their respective owners.

© 2024 VISHAY INTERTECHNOLOGY, INC. ALL RIGHTS RESERVED