Hyperfast Rectifier, 30 A FRED Pt®

TO-220 FullPAK 2L

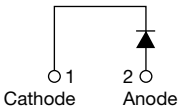

PRIMARY CHARACTERISTICS	
$I_{F(AV)}$	30 A
V_R	600 V
V_F at I_F	1.4 V
t_{rr} (typ.)	27 ns
T_J max.	175 °C
Package	TO-220 FullPAK 2L
Circuit configuration	Single

FEATURES

- Hyperfast soft recovery time
- Low forward voltage drop
- 175 °C operating junction temperature
- Low leakage current
- Fully isolated package (V_{INS} = 2500 V_{RMS})
- True 2 pin package
- Designed and qualified according to JEDEC®-JESD 47
- Material categorization: for definitions of compliance please see www.vishay.com/doc?99912

Pb-free
RoHS COMPLIANT
HALOGEN FREE

DESCRIPTION / APPLICATIONS

Hyperfast recovery rectifiers designed with optimized performance of forward voltage drop, hyperfast recovery time, and soft recovery.

The planar structure and the platinum doped life time control guarantee the best overall performance, ruggedness and reliability characteristics.

These devices are intended for use in PFC boost stage in the AC/DC section of SMPS, inverters or as freewheeling diodes.

The extremely optimized stored charge and low recovery current minimize the switching losses and reduce over dissipation in the switching element and snubbers.

ABSOLUTE MAXIMUM RATINGS

PARAMETER	SYMBOL	TEST CONDITIONS	VALUES	UNITS
Peak repetitive reverse voltage	V_{RRM}		600	V
Average rectified forward current in DC	$I_{F(AV)}$	T_C = 51 °C	30	A
Non-repetitive peak surge current	I_{FSM}	T_J = 25 °C	180	
Operating junction and storage temperatures	T_J, T_{Stg}		-65 to +175	°C

ELECTRICAL SPECIFICATIONS (T_J = 25 °C unless otherwise specified)

PARAMETER	SYMBOL	TEST CONDITIONS	MIN.	TYP.	MAX.	UNITS
Breakdown voltage, blocking voltage	V_{BR}, V_R	I_R = 100 μA	600	-	-	V
Forward voltage	V_F	I_F = 30 A	-	2.0	2.65	
		I_F = 30 A, T_J = 150 °C	-	1.4	1.8	
Reverse leakage current	I_R	V_R = V_R rated	-	0.02	30	μA
		T_J = 150 °C, V_R = V_R rated	-	50	300	
Junction capacitance	C_T	V_R = 600 V	-	20	-	pF
Series inductance	L_S	Measured lead to lead 5 mm from package body	-	8	-	nH

For technical questions within your region: DiodesAmericas@vishay.com, DiodesAsia@vishay.com, DiodesEurope@vishay.com
THIS DOCUMENT IS SUBJECT TO CHANGE WITHOUT NOTICE. THE PRODUCTS DESCRIBED HEREIN AND THIS DOCUMENT ARE SUBJECT TO SPECIFIC DISCLAIMERS, SET FORTH AT www.vishay.com/doc?91000

DYNAMIC RECOVERY CHARACTERISTICS (T_J = 25 °C unless otherwise specified)							
PARAMETER	**SYMBOL**	**TEST CONDITIONS**		**MIN.**	**TYP.**	**MAX.**	**UNITS**
Reverse recovery time	t_{rr}	I_F = 1 A, dI_F/dt = 50 A/μs, V_R = 30 V		-	26	35	ns
		T_J = 25 °C	I_F = 30 A, dI_F/dt = 200 A/μs, V_R = 200 V	-	26	-	
		T_J = 125 °C		-	70	-	
Peak recovery current	I_{RRM}	T_J = 25 °C		-	3.5	-	A
		T_J = 125 °C		-	7.6	-	
Reverse recovery charge	Q_{rr}	T_J = 25 °C		-	50	-	nC
		T_J = 125 °C		-	280	-	

THERMAL - MECHANICAL SPECIFICATIONS						
PARAMETER	**SYMBOL**	**TEST CONDITIONS**	**MIN.**	**TYP.**	**MAX.**	**UNITS**
Maximum junction and storage temperature range	T_J, T_{Stg}		-65	-	175	°C
Thermal resistance, junction-to-case	R_{thJC}		-	3.2	3.8	°C/W
Thermal resistance, junction-to-ambient	R_{thJA}	Typical socket mount	-	-	70	
Typical thermal resistance, case-to-heatsink	R_{thCS}	Mounting surface, flat, smooth and greased	-	0.5	-	
Weight			-	2	-	g
			-	0.07	-	oz.
Mounting torque			6 (5)	-	12 (10)	kgf · cm (lbf · in)
Marking device		Case style TO-220 FullPAK 2L	ETH3006FP			

For technical questions within your region: DiodesAmericas@vishay.com, DiodesAsia@vishay.com, DiodesEurope@vishay.com
THIS DOCUMENT IS SUBJECT TO CHANGE WITHOUT NOTICE. THE PRODUCTS DESCRIBED HEREIN AND THIS DOCUMENT ARE SUBJECT TO SPECIFIC DISCLAIMERS, SET FORTH AT www.vishay.com/doc?91000

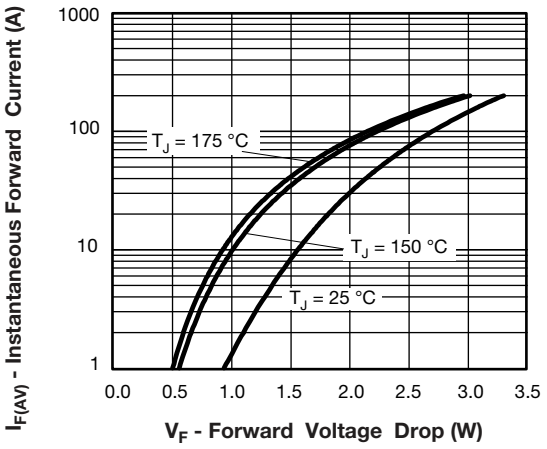

Fig. 1 - Typical Forward Voltage Drop Characteristics

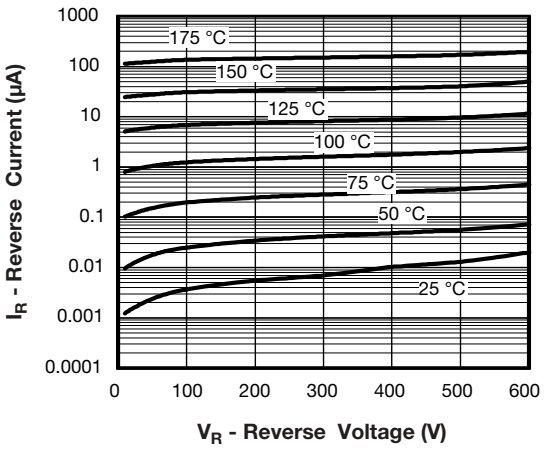

Fig. 2 - Typical Values of Reverse Current vs. Reverse Voltage

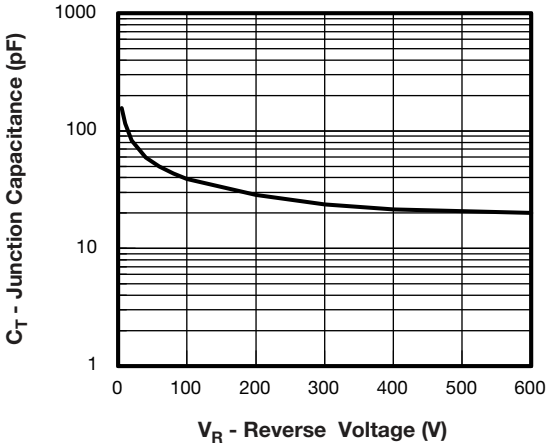

Fig. 3 - Typical Junction Capacitance vs. Reverse Voltage

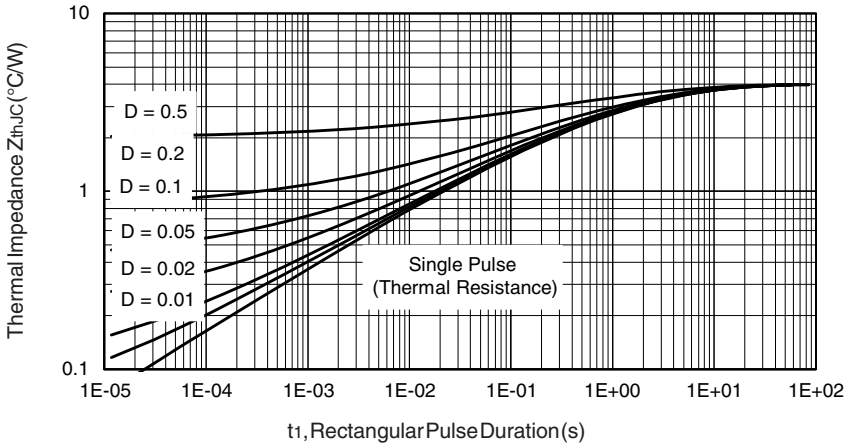

Fig. 4 - Maximum Thermal Impedance Z_{thJC} Characteristics

For technical questions within your region: DiodesAmericas@vishay.com, DiodesAsia@vishay.com, DiodesEurope@vishay.com
THIS DOCUMENT IS SUBJECT TO CHANGE WITHOUT NOTICE. THE PRODUCTS DESCRIBED HEREIN AND THIS DOCUMENT ARE SUBJECT TO SPECIFIC DISCLAIMERS, SET FORTH AT www.vishay.com/doc?91000

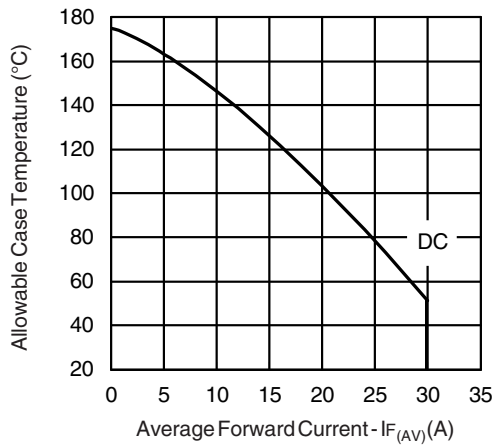

Fig. 5 - Maximum Allowable Case Temperature vs. Average Forward Current

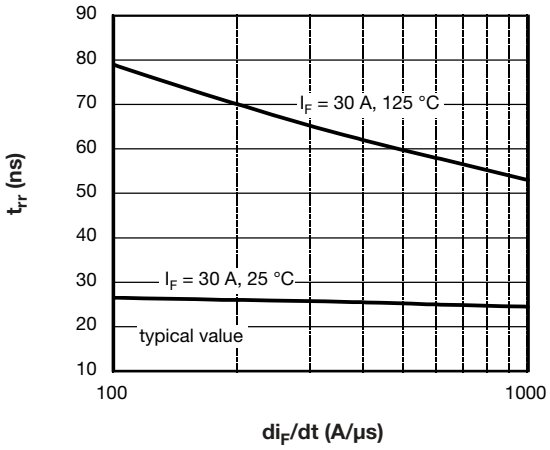

Fig. 7 - Typical Reverse Recovery vs. dI_F/dt

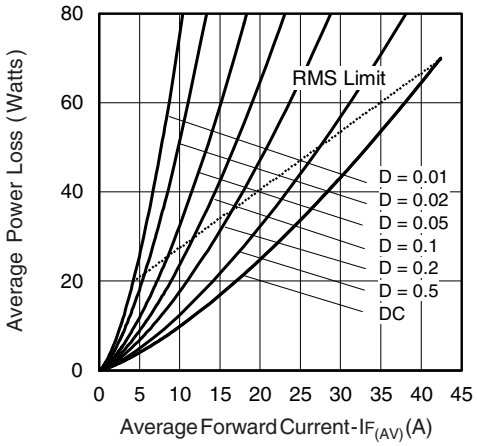

Fig. 6 - Forward Power Loss Characteristics

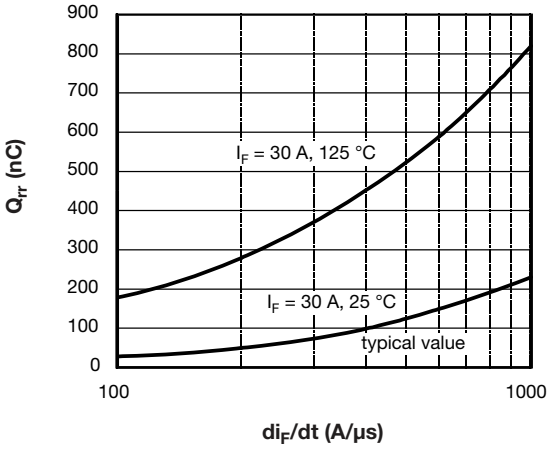

Fig. 8 - Typical Stored Charge vs. dI_F/dt

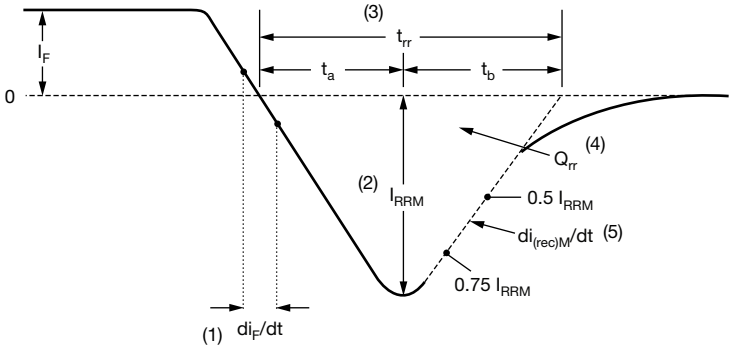

(1) di_F/dt - rate of change of current through zero crossing

(2) I_{RRM} - peak reverse recovery current

(3) t_{rr} - reverse recovery time measured from zero crossing point of negative going I_F to point where a line passing through 0.75 I_{RRM} and 0.50 I_{RRM} extrapolated to zero current.

(4) Q_{rr} - area under curve defined by t_{rr} and I_{RRM}

$$Q_{rr} = \frac{t_{rr} \times I_{RRM}}{2}$$

(5) $di_{(rec)M}/dt$ - peak rate of change of current during t_b portion of t_{rr}

Fig. 9 - Reverse Recovery Waveform and Definitions

For technical questions within your region: DiodesAmericas@vishay.com, DiodesAsia@vishay.com, DiodesEurope@vishay.com
THIS DOCUMENT IS SUBJECT TO CHANGE WITHOUT NOTICE. THE PRODUCTS DESCRIBED HEREIN AND THIS DOCUMENT ARE SUBJECT TO SPECIFIC DISCLAIMERS, SET FORTH AT www.vishay.com/doc?91000

ORDERING INFORMATION TABLE

Device code	VS-	E	T	H	30	06	FP	-M3
	1	2	3	4	5	6	7	8

1 - Vishay Semiconductors product
2 - Circuit configuration:
E = single
3 - T = TO-220
4 - H = hyperfast recovery time
5 - Current code: 30 = 30 A
6 - Voltage code: 06 = 600 V
7 - FP = TO-220 FullPAK 2L
8 - Environmental digit:
-M3 = halogen-free, RoHS-compliant, and terminations lead (Pb)-free

ORDERING INFORMATION (Example)			
PREFERRED P/N	**QUANTITY PER TUBE**	**MINIMUM ORDER QUANTITY**	**PACKAGING DESCRIPTION**
VS-ETH3006FP-M3	50	1000	Antistatic plastic tube

LINKS TO RELATED DOCUMENTS	
Dimensions	www.vishay.com/doc?96157
Part marking information	www.vishay.com/doc?95392
SPICE model	www.vishay.com/doc?96817

For technical questions within your region: DiodesAmericas@vishay.com, DiodesAsia@vishay.com, DiodesEurope@vishay.com
THIS DOCUMENT IS SUBJECT TO CHANGE WITHOUT NOTICE. THE PRODUCTS DESCRIBED HEREIN AND THIS DOCUMENT ARE SUBJECT TO SPECIFIC DISCLAIMERS, SET FORTH AT www.vishay.com/doc?91000

True 2 Pin TO-220

DIMENSIONS in millimeters and inches

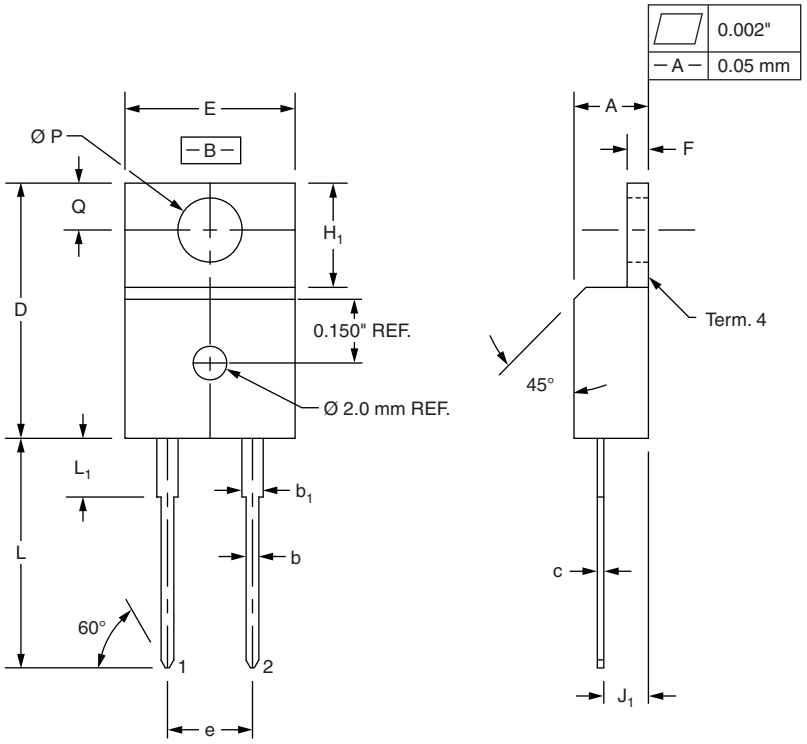

SYMBOL	MILLIMETERS		INCHES	
	MIN.	MAX.	MIN.	MAX.
A	4.32	4.57	0.170	0.180
b	0.71	0.91	0.028	0.036
b_1	1.15	1.39	0.045	0.055
c	0.36	0.53	0.014	0.021
D	14.99	15.49	0.590	0.610
E	10.04	10.41	0.395	0.410
e	5.08 BSC		0.200 BSC	
F	1.22	1.37	0.048	0.054
H_1	5.97	6.47	0.235	0.255
J_1	2.54	2.79	0.100	0.110
L	13.47	13.97	0.530	0.550
L_1 (1)	3.31	3.81	0.130	0.150
Ø P	3.79	3.88	0.149	0.153
Q	2.60	2.84	0.102	0.112

Notes

(1) Lead dimension and finish uncontrolled in L_1

- These dimensions are within allowable dimensions of JEDEC TO-220AB rev. J outline dated 3-24-87
- Controling dimension: Inch

For technical questions within your region: DiodesAmericas@vishay.com, DiodesAsia@vishay.com, DiodesEurope@vishay.com

THIS DOCUMENT IS SUBJECT TO CHANGE WITHOUT NOTICE. THE PRODUCTS DESCRIBED HEREIN AND THIS DOCUMENT ARE SUBJECT TO SPECIFIC DISCLAIMERS, SET FORTH AT www.vishay.com/doc?91000

2L TO-220 FullPAK

DIMENSIONS in millimeters

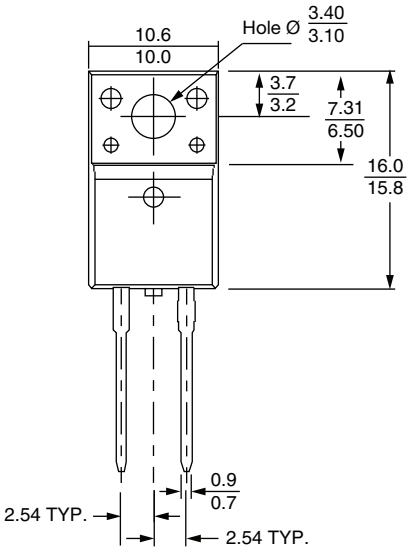

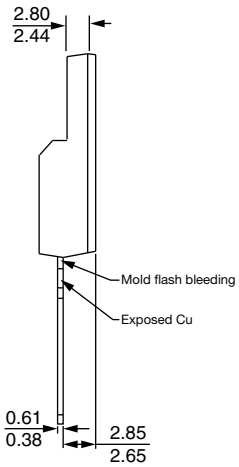

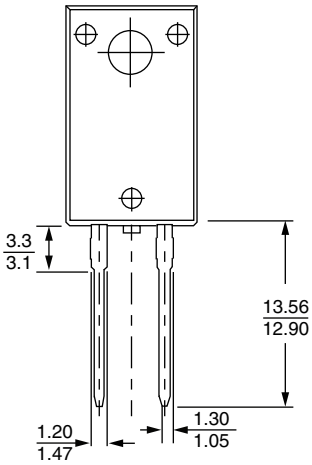

Bottom view

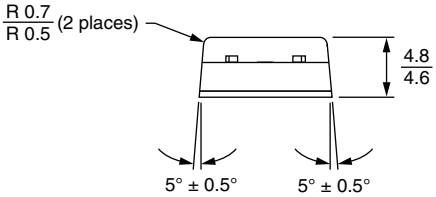

For technical questions within your region: DiodesAmericas@vishay.com, DiodesAsia@vishay.com, DiodesEurope@vishay.com

THIS DOCUMENT IS SUBJECT TO CHANGE WITHOUT NOTICE. THE PRODUCTS DESCRIBED HEREIN AND THIS DOCUMENT ARE SUBJECT TO SPECIFIC DISCLAIMERS, SET FORTH AT www.vishay.com/doc?91000

Disclaimer

ALL PRODUCT, PRODUCT SPECIFICATIONS AND DATA ARE SUBJECT TO CHANGE WITHOUT NOTICE TO IMPROVE RELIABILITY, FUNCTION OR DESIGN OR OTHERWISE.

Vishay Intertechnology, Inc., its affiliates, agents, and employees, and all persons acting on its or their behalf (collectively, “Vishay”), disclaim any and all liability for any errors, inaccuracies or incompleteness contained in any datasheet or in any other disclosure relating to any product.

Vishay makes no warranty, representation or guarantee regarding the suitability of the products for any particular purpose or the continuing production of any product. To the maximum extent permitted by applicable law, Vishay disclaims (i) any and all liability arising out of the application or use of any product, (ii) any and all liability, including without limitation special, consequential or incidental damages, and (iii) any and all implied warranties, including warranties of fitness for particular purpose, non-infringement and merchantability.

Statements regarding the suitability of products for certain types of applications are based on Vishay's knowledge of typical requirements that are often placed on Vishay products in generic applications. Such statements are not binding statements about the suitability of products for a particular application. It is the customer's responsibility to validate that a particular product with the properties described in the product specification is suitable for use in a particular application. Parameters provided in datasheets and / or specifications may vary in different applications and performance may vary over time. All operating parameters, including typical parameters, must be validated for each customer application by the customer's technical experts. Product specifications do not expand or otherwise modify Vishay's terms and conditions of purchase, including but not limited to the warranty expressed therein.

Hyperlinks included in this datasheet may direct users to third-party websites. These links are provided as a convenience and for informational purposes only. Inclusion of these hyperlinks does not constitute an endorsement or an approval by Vishay of any of the products, services or opinions of the corporation, organization or individual associated with the third-party website. Vishay disclaims any and all liability and bears no responsibility for the accuracy, legality or content of the third-party website or for that of subsequent links.

Except as expressly indicated in writing, Vishay products are not designed for use in medical, life-saving, or life-sustaining applications or for any other application in which the failure of the Vishay product could result in personal injury or death. Customers using or selling Vishay products not expressly indicated for use in such applications do so at their own risk. Please contact authorized Vishay personnel to obtain written terms and conditions regarding products designed for such applications.

No license, express or implied, by estoppel or otherwise, to any intellectual property rights is granted by this document or by any conduct of Vishay. Product names and markings noted herein may be trademarks of their respective owners.

© 2024 VISHAY INTERTECHNOLOGY, INC. ALL RIGHTS RESERVED