High Voltage Ceramic Capacitor Stacks, With Leads, Class 2 Ceramic

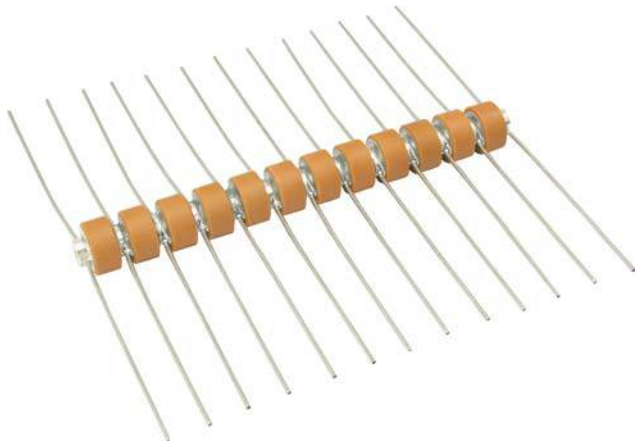

QUICK REFERENCE DATA			
DESCRIPTION	VALUE		
Ceramic Class	2		
Ceramic Dielectric	R2005	R2000, R3000	R6000
Type	GDMQ07	GDMQ08	GDMQ10
Voltage (V_{DC})	8000	8000	10 000
Min. Capacitance (pF)	250	125	500
Max. Capacitance (pF)	250	250	500
Mounting	Leaded		

MATERIAL

Capacitor elements made from class 2 ceramic dielectric with noble metal electrodes.

Connection terminals between the discs: brass, silver plated

Lead terminals: tinned copper

OPTIONAL HV DIODES

The capacitor stacks can be supplied completely mounted with high voltage diodes instead of the leads.
Please contact us.

FEATURES

- Small size
- Multiple designs up to 12 stages
- Voltage ratings of the individual discs from 8 kV_{DC} to 10 kV_{DC}
- Stacks with diodes
- Lead (Pb)-free version on request
- Other versions on request

APPLICATIONS

Ceramic capacitor stacks have been developed for use in low power voltage multipliers used in high voltage DC generators. The major applications are x-ray equipment for medical diagnostics or electrostatic paint spraying equipment.

CAPACITANCE RANGE

125 pF to 500 pF

CAPACITANCE TOLERANCE

- 20 % / + 40 %

CERAMIC DIELECTRIC

- R2000 (X7R)
- R2005 (X7R)
- R3000 (X7R)
- R6000 (Y5U)

RATED VOLTAGE

- 8.0 kV_{DC} per single disc
- 10 kV_{DC} per single disc

DIELECTRIC STRENGTH TEST

150 % to 160 % of rated voltage, in dielectric fluid

DISSIPATION FACTOR

Max. 2.5 % (1 kHz)

INSULATION RESISTANCE

- R2000: min. 100 GΩ (at 25 °C)
- R2005, R3000, R6000: min. 10 GΩ (at 25 °C)

OPERATING TEMPERATURE RANGE

-25 °C to +85 °C

For technical questions, contact: cdc@vishay.com

THIS DOCUMENT IS SUBJECT TO CHANGE WITHOUT NOTICE. THE PRODUCTS DESCRIBED HEREIN AND THIS DOCUMENT ARE SUBJECT TO SPECIFIC DISCLAIMERS, SET FORTH AT www.vishay.com/doc?91000

SAP PART NUMBER AND ELECTRICAL DATA							
PART NUMBER	CERAMIC	CAPACITANCE VALUES (1) (pF)	RATED VOLTAGE (1)(2) (kV_{DC})	TEST VOLTAGE (1)(3) (kV_{DC})	NO. OF DISC IN SERIES	$L_{MAX.}$ mm (INCH)	D mm (INCH)
TYPE GDMQ07							
RH#250P73BPZFF####	R2005 (X7R)	250 - 20 % / + 40 %	8.0	12	4	26.0 (1.024)	7.7 ± 0.2 (0.303 ± 0.008)
RH#250P73BPZFG####					5	32.0 (1.260)	
RH#250P73BPZAM####					6	38.0 (1.496)	
RH#250P73BPZFJ####					8	50.0 (1.969)	
RH#250P73BPZFK####					9	56.0 (2.205)	
RH#250P73BPZBE####					10	62.0 (2.441)	
RH#250P73BPZBF####					12	72.0 (2.835)	
TYPE GDMQ08							
RH#125P73BPZBH####	R2000 (X7R)	125 - 20 % / + 40 %	8.0	13	3	22.0 (0.866)	8.8 - 0.4 (0.346 - 0.016)
RH#125P73BPZFM####					4	28.0 (1.102)	
RH#125P73BPZFN####					5	34.5 (1.339)	
RH#125P73BPZAH####					6	41.0 (1.614)	
RH#125P73BPZFP####					8	54.0 (2.126)	
RH#125P73BPZAK####					9	60.5 (2.362)	
RH#125P73BPZFQ####					10	67.0 (2.638)	
RH#125P73BPZGA####					12	80.0 (3.150)	
RH#250P73BPZEW####	R3000 (X7R)	250 - 20 % / + 40 %	8.0	13	3	20.0 (0.787)	
RH#250P73BPZES####					4	26.0 (1.024)	
RH#250P73BPZFR####					5	32.0 (1.260)	
RH#250P73BPZEU####					6	38.0 (1.496)	
RH#250P73BPZFS####					8	50.0 (1.969)	
RH#250P73BPZFT####					9	56.0 (2.205)	
RH#250P73BPZFU####					10	62.0 (2.441)	
RH#250P73BPZFV####					12	74.0 (2.913)	
TYPE GDMQ10							
RH#500P73BHZAT####	R6000 (Y5U)	500 - 20 % / + 40 %	10	15	4	38.0 (1.496)	10.5 ± 0.4 (0.413 ± 0.016)
RH#500P73BHZAZ####					5	47.0 (1.850)	
RH#250P73BHZFW####					6	56.0 (2.205)	
RH#250P73BHZFX####					8	74.0 (2.913)	

Notes

- # 3rd digit: code letter of type RHS or RHD
- #### 15th to 18th digit: drawing number

(1) Per single disc
(2) In an insulating environment
(3) Min. 3 s in dielectric fluid

For technical questions, contact: cdc@vishay.com
THIS DOCUMENT IS SUBJECT TO CHANGE WITHOUT NOTICE. THE PRODUCTS DESCRIBED HEREIN AND THIS DOCUMENT ARE SUBJECT TO SPECIFIC DISCLAIMERS, SET FORTH AT www.vishay.com/doc?91000

DIMENSIONS DATA in millimeters (inches)

TYPE RHS

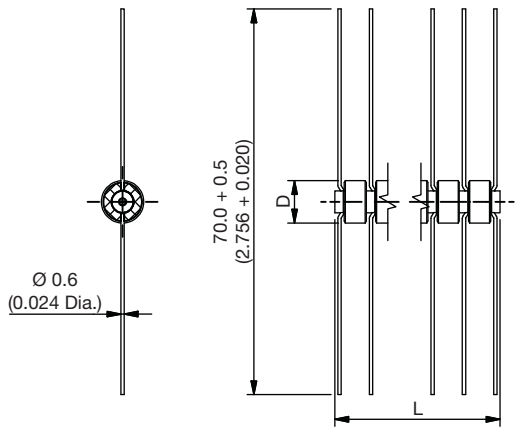

TYPE RHD

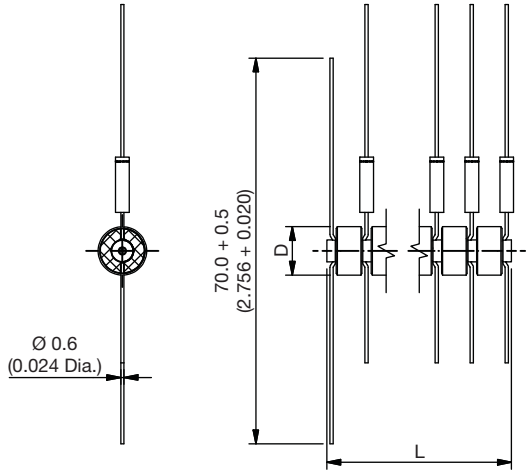

RELATED DOCUMENTS

General Information	www.vishay.com/doc?22090

For technical questions, contact: cdc@vishay.com
THIS DOCUMENT IS SUBJECT TO CHANGE WITHOUT NOTICE. THE PRODUCTS DESCRIBED HEREIN AND THIS DOCUMENT ARE SUBJECT TO SPECIFIC DISCLAIMERS, SET FORTH AT www.vishay.com/doc?91000

Disclaimer

ALL PRODUCT, PRODUCT SPECIFICATIONS AND DATA ARE SUBJECT TO CHANGE WITHOUT NOTICE TO IMPROVE RELIABILITY, FUNCTION OR DESIGN OR OTHERWISE.

Vishay Intertechnology, Inc., its affiliates, agents, and employees, and all persons acting on its or their behalf (collectively, “Vishay”), disclaim any and all liability for any errors, inaccuracies or incompleteness contained in any datasheet or in any other disclosure relating to any product.

Vishay makes no warranty, representation or guarantee regarding the suitability of the products for any particular purpose or the continuing production of any product. To the maximum extent permitted by applicable law, Vishay disclaims (i) any and all liability arising out of the application or use of any product, (ii) any and all liability, including without limitation special, consequential or incidental damages, and (iii) any and all implied warranties, including warranties of fitness for particular purpose, non-infringement and merchantability.

Statements regarding the suitability of products for certain types of applications are based on Vishay's knowledge of typical requirements that are often placed on Vishay products in generic applications. Such statements are not binding statements about the suitability of products for a particular application. It is the customer's responsibility to validate that a particular product with the properties described in the product specification is suitable for use in a particular application. Parameters provided in datasheets and / or specifications may vary in different applications and performance may vary over time. All operating parameters, including typical parameters, must be validated for each customer application by the customer's technical experts. Product specifications do not expand or otherwise modify Vishay's terms and conditions of purchase, including but not limited to the warranty expressed therein.

Hyperlinks included in this datasheet may direct users to third-party websites. These links are provided as a convenience and for informational purposes only. Inclusion of these hyperlinks does not constitute an endorsement or an approval by Vishay of any of the products, services or opinions of the corporation, organization or individual associated with the third-party website. Vishay disclaims any and all liability and bears no responsibility for the accuracy, legality or content of the third-party website or for that of subsequent links.

Except as expressly indicated in writing, Vishay products are not designed for use in medical, life-saving, or life-sustaining applications or for any other application in which the failure of the Vishay product could result in personal injury or death. Customers using or selling Vishay products not expressly indicated for use in such applications do so at their own risk. Please contact authorized Vishay personnel to obtain written terms and conditions regarding products designed for such applications.

No license, express or implied, by estoppel or otherwise, to any intellectual property rights is granted by this document or by any conduct of Vishay. Product names and markings noted herein may be trademarks of their respective owners.

© 2024 VISHAY INTERTECHNOLOGY, INC. ALL RIGHTS RESERVED