Metallized Polyester Film Capacitors
MKT Radial Potted Type

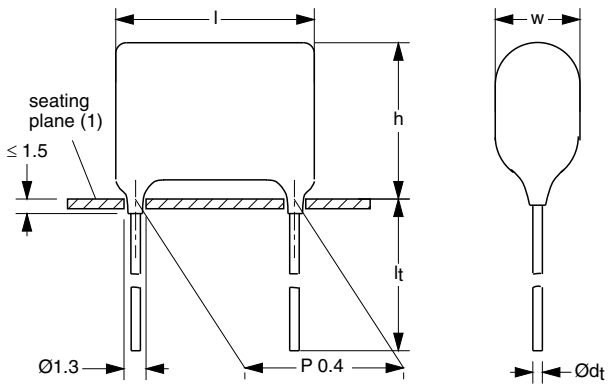

Dimensions in mm
(1) Hole ∅ 1.0 for d_t = 0.6 mm

APPLICATIONS

Blocking and coupling. Bypass and energy reservoir

MARKING

C-value; tolerance; rated voltage

DIELECTRIC

Polyester film

ELECTRODES

Vacuum deposited aluminium

COATING

Flame retardant epoxy material (UL-class 94 V-0)

CONSTRUCTION

Wound mono construction

LEADS

Tinned wire

CAPACITANCE RANGE (E12 SERIES)

0.001 to 1.0 µF

FEATURES

Available taped on reel and loose in box

- Material categorization:
  For definitions of compliance please see www.vishay.com/doc?99912

Pb-free
e3
RoHS COMPLIANT

CAPACITANCE TOLERANCE

± 10 %; ± 5 %

RATED (DC) VOLTAGE

63 V; 100 V; 250 V; 400 V; 630 V

RATED (AC) VOLTAGE

40 V; 63 V; 160 V; 220 V; 250 V

CLIMATIC CATEGORY

55/105/56

RATED TEMPERATURE

85 °C

MAXIMUM APPLICATION TEMPERATURE

105 °C

REFERENCE SPECIFICATIONS

IEC 60384-2

PERFORMANCE GRADE

Grade 1 (long life)

DETAIL SPECIFICATION

For more detailed data and test requirements see “Type detail specification HQN-384-02/101”

This document is subject to change without notice.
THE PRODUCTS DESCRIBED HEREIN AND THIS DOCUMENT ARE SUBJECT TO SPECIFIC DISCLAIMERS, SET FORTH AT www.vishay.com/doc?91000

COMPOSITION OF CATALOG NUMBER

TYPE AND PITCHES	
369	10.0 mm

CAPACITANCE (numerically)

MULTIPLIER (nF)	
0.1	2
1	3
10	4
100	5

Example:
104 = 10 x 10 = 100 nF

2222	369	XX	XX	X
BFC2*	369	XX	XX	X

* Use this partnumber for those with access to the Vishay's SAP system and Partners website within the Americas

TYPE	PACKAGING	LEAD CONFIGURATION	ON REQUEST					
			C-TOL	63 V	100 V	250 V	400 V	630 V
369	loose in box	straight leads 4.0 + 1.0/– 0.5 mm	± 10 %	15	25	45	55	65
			± 5 %	16	26	46	56	66
		straight leads 22.0 ± 4.0 mm	± 10 %	11	21	41	51	61
			± 5 %	12	22	42	52	62
	taped on reel	H = 18.5 mm; P_0 = 12.7 mm; reel diameter 500 mm	± 10 %	18	28	48	58	68
			± 5 %	19	29	49	59	69

SPECIFIC REFERENCE DATA

DESCRIPTION	VALUE				
Tangent of loss angle:	at 1 kHz		at 10 kHz		at 100 kHz
C ≤ 0.47 µF	$\leq 75 \times 10^{-4}$		$\leq 130 \times 10^{-4}$		$\leq 300 \times 10^{-4}$
0.47 µF < C ≤ 1.0 µF	$\leq 75 \times 10^{-4}$		$\leq 130 \times 10^{-4}$		$\leq 225 \times 10^{-4}$
C ≥ 0.1 µF	$\leq 75 \times 10^{-4}$		$\leq 130 \times 10^{-4}$		$\leq 300 \times 10^{-4}$
Rated voltage pulse slope $(dU/dt)_R$	at 63 V (DC)	at 100 V (DC)	at 250 V (DC)	at 400 V (DC)	at 630 V (DC)
	30 V/µs	28 V/µs	70 V/µs	110 V/µs	70 V/µs
R between leads, for C ≤ 0.33 µF:					
at 10 V; 1 minute	> 15000 MΩ				
at 100 V; 1 minute		> 15000 MΩ	> 30000 MΩ	> 30000 MΩ	
at 500 V; 1 minute					> 30000 MΩ
RC between leads, for C > 0.33 µF:					
at 10 V; 1 minute	> 5000 s				
at 500 V; 1 minute					> 10000 s
R between interconnecting leads and casing;					
at 10 V; 1 minute	> 30000 MΩ				
at 100 V; 1 minute		> 30000 MΩ	> 30000 MΩ	> 30000 MΩ	
at 500 V; 1 minute					> 30000 MΩ
Withstanding (DC) voltage (cut off current 10 mA); rise time 100 V/s	100 V; 1 minute	160 V; 1 minute	400 V; 1 minute	640 V; 1 minute	1008 V; 1 minute
Withstanding (DC) voltage between leads and case	200 V; 1 minute	200 V; 1 minute	500 V; 1 minute	800 V; 1 minute	1260 V; 1 minute

This document is subject to change without notice.
THE PRODUCTS DESCRIBED HEREIN AND THIS DOCUMENT ARE SUBJECT TO SPECIFIC DISCLAIMERS, SET FORTH AT www.vishay.com/doc?91000

U_{Rdc} = 63 V; U_{Rac} = 40 V

C (µF)	DIMENSIONS w_{max} x h_{max} x l_{max} (mm)	MASS (g)	CATALOG NUMBER 2222 369 ..... AND PACKAGING			
			LOOSE IN BOX			REEL
			l_t = 4.0 + 1.0/- 0.5 mm		l_t = 22.0 ± 4.0 mm	
			C-tol = ± 10 %			
			last 5 digits of catalog number	SPQ	SPQ	SPQ
Pitch = 10.0 ± 0.4 mm; d_t = 0.60 ± 0.06 mm						
0.22	4.2 × 9.3 × 12.5	0.4	15224	2000	1000	1300
0.27	3.8 × 9.0 × 12.5	0.4	15274	2000	1000	1300
0.33	4.1 × 9.3 × 12.5	0.4	15334	2000	1000	1300
0.39	4.0 × 9.2 × 12.5	0.4	15394	2000	1000	1300
0.47	4.3 × 9.5 × 12.5	0.5	15474	2000	1000	1200
0.56	4.7 × 9.8 × 12.5	0.5	15564	2000	1000	1200
0.68	5.1 × 10.2 × 12.5	0.5	15684	2000	1000	1100
0.82	5.5 × 10.7 × 12.5	0.6	15824	2000	1000	1000
1	6.0 × 11.1 × 12.5	0.7	15105	2000	1000	900

U_{Rdc} = 100 V; U_{Rac} = 63 V

C (µF)	DIMENSIONS w_{max} x h_{max} x l_{max} (mm)	MASS (g)	CATALOG NUMBER 2222 369 ..... AND PACKAGING			
			LOOSE IN BOX			REEL
			l_t = 4.0 + 1.0/- 0.5 mm		l_t = 22.0 ± 4.0 mm	
			C-tol = ± 10 %			
			last 5 digits of catalog number	SPQ	SPQ	SPQ
Pitch = 10.0 ± 0.4 mm; d_t = 0.60 ± 0.06 mm						
0.056 0.068	4.0 × 9.1 × 12.5	0.4	25563 25683	2000	1000	1500
0.082	3.7 × 8.8 × 12.5	0.4	25823	2000	1000	1500
0.1	4.0 × 9.0 × 12.5	0.4	25104	2000	1000	1500
0.12	4.3 × 9.3 × 12.5	0.4	25124	2000	1000	1500
0.15	3.9 × 8.9 × 12.5	0.4	25154	2000	1000	1500
0.18	4.2 × 9.2 × 12.5	0.5	25184	2000	1000	1300
0.22	4.5 × 9.4 × 12.5	0.5	25224	2000	1000	1200

U_{Rdc} = 250 V; U_{Rac} = 160 V

C (µF)	DIMENSIONS w_{max} x h_{max} x l_{max} (mm)	MASS (g)	CATALOG NUMBER 2222 369 ..... AND PACKAGING			
			LOOSE IN BOX			REEL
			l_t = 4.0 + 1.0/- 0.5 mm		l_t = 22.0 ± 4.0 mm	
			C-tol = ± 10 %			
			last 5 digits of catalog number	SPQ	SPQ	SPQ
Pitch = 10.0 ± 0.4 mm; d_t = 0.60 ± 0.06 mm						
0.027	4.2 × 8.7 × 12.5	0.4	45273	2000	1000	1500
0.033	4.6 × 8.8 × 12.5	0.5	45333	2000	1000	1300
0.039	4.0 × 8.8 × 12.5	0.4	45393	2000	1000	1500
0.047	4.5 × 9.0 × 12.5	0.5	45473	2000	1000	1500
0.056	4.6 × 8.8 × 12.5	0.5	45563	2000	1000	1300
0.068	4.6 × 9.2 × 12.5	0.5	45683	2000	1000	1300
0.082	4.4 × 9.4 × 12.5	0.5	45823	2000	1000	1200
0.1	4.7 × 9.7 × 12.5	0.5	45104	2000	1000	1200

This document is subject to change without notice.
THE PRODUCTS DESCRIBED HEREIN AND THIS DOCUMENT ARE SUBJECT TO SPECIFIC DISCLAIMERS, SET FORTH AT www.vishay.com/doc?91000

U_{Rdc} = 400 V; U_{Rac} = 220 V

C (µF)	DIMENSIONS w_{max} x h_{max} x l_{max} (mm)	MASS (g)	CATALOG NUMBER 2222 369 ..... AND PACKAGING			
			LOOSE IN BOX			REEL
			l_t = 4.0 + 1.0/- 0.5 mm		l_t = 22.0 ± 4.0 mm	
			C-tol = ± 10 %			
			last 5 digits of catalog number	SPQ	SPQ	SPQ
Pitch = 10.0 ± 0.4 mm; d_t = 0.60 ± 0.06 mm						
0.001	4.5 × 8.7 × 12.5	0.5	55102	2000	1000	1500
0.0012	4.5 × 9.0 × 12.5	0.5	55122	2000	1000	1500
0.0015	4.5 × 8.8 × 12.5	0.5	55152	2000	1000	1500
0.0018	4.5 × 8.7 × 12.5	0.5	55182	2000	1000	1500
0.0022	4.0 × 8.6 × 12.5	0.5	55222	2000	1000	1500
0.0027	4.3 × 8.9 × 12.5	0.5	55272	2000	1000	1500
0.0033	4.6 × 9.1 × 12.5	0.5	55332	2000	1000	1500
0.0039	4.0 × 8.7 × 12.5	0.5	55392	2000	1000	1500
0.0047	4.1 × 8.8 × 12.5	0.5	55472	2000	1000	1500
0.0056	4.6 × 9.1 × 12.5	0.5	55562	2000	1000	1500
0.0068			55682			
0.0082			55822			
0.01			55103			
0.012	4.0 × 8.7 × 12.5	0.5	55123	2000	1000	1500
0.015	4.1 × 8.8 × 12.5	0.5	55153	2000	1000	1500
0.018	4.4 × 8.8 × 12.5	0.5	55183	2000	1000	1300
0.022	4.2 × 8.8 × 12.5	0.5	55223	2000	1000	1500
0.027	4.2 × 9.1 × 12.5	0.5	55273	2000	1000	1300
0.033	4.6 × 9.4 × 12.5	0.5	55333	2000	1000	1300

U_{Rdc} = 630 V; U_{Rac} = 250 V

C (µF)	DIMENSIONS w_{max} x h_{max} x l_{max} (mm)	MASS (g)	CATALOG NUMBER 2222 369 ..... AND PACKAGING			
			LOOSE IN BOX			REEL
			l_t = 4.0 + 1.0/- 0.5 mm		l_t = 22.0 ± 4.0 mm	
			C-tol = ± 10 %			
			last 5 digits of catalog number	SPQ	SPQ	SPQ
Pitch = 10.0 ± 0.4 mm; d_t = 0.60 ± 0.06 mm						
0.01	4.1 × 8.7 × 12.5	0.4	65103	2000	1000	1300
0.012	4.4 × 8.9 × 12.5	0.5	65123	2000	1000	1200
0.015	4.9 × 9.2 × 12.5	0.5	65153	2000	1000	1100
0.018	5.3 × 9.5 × 12.5	0.6	65183	2000	1000	1000
0.022	5.9 × 9.9 × 12.5	0.7	65223	2000	1000	900

This document is subject to change without notice.
THE PRODUCTS DESCRIBED HEREIN AND THIS DOCUMENT ARE SUBJECT TO SPECIFIC DISCLAIMERS, SET FORTH AT www.vishay.com/doc?91000

APPLICATION NOTE AND LIMITING CONDITIONS

These capacitors are not suitable for mains applications as across-the-line capacitors without additional protection, as described hereunder. These mains applications are strictly regulated in safety standards and therefore electromagnetic interference suppression capacitors conforming the standards must be used.

For capacitors connected in parallel, normally the proof voltage and possibly the rated voltage must be reduced. For information depending of the capacitance value and the number of parallel connections contact: dc-film@vishay.com

To select the capacitor for a certain application, the following conditions must be checked:

1. The peak voltage (U_P) shall not be greater than the rated DC voltage (U_{RDC}).
2. The peak-to-peak voltage (U_{P-P}) shall not be greater than $2\sqrt{2} \times U_{RAC}$ to avoid the ionization inception level.
3. The voltage pulse slope (dU/dt) shall not exceed the rated voltage pulse slope in an RC-circuit at rated voltage and without ringing. If the pulse voltage is lower than the rated DC voltage, the rated voltage pulse slope may be multiplied by U_{RDC} and divided by the applied voltage.

   For all other pulses following equation must be fulfilled:

   $$2 \times \int_0^T \left(\frac{dU}{dt}\right)^2 \times dt < U_{Rdc} \times \left(\frac{dU}{dt}\right)_{rated}$$

   T is the pulse duration.

   The rated voltage pulse slope is valid for ambient temperatures up to 85 °C. For higher temperatures a derating factor of 3 % per K shall be applied.
4. The maximum component surface temperature rise must be lower than the limits (see graph “Max. allowed component temperature rise”).
5. Since in circuits used at voltages over 280 V peak-to-peak the risk for an intrinsically active flammability after a capacitor breakdown (short circuit) increases, it is recommended that the power to the component is limited to 100 times the values mentioned in the table: “Heat Conductivity”
6. When using these capacitors as across-the-line capacitor in the input filter for mains applications the applicant must guarantee that the following conditions are fulfilled in any case (spikes and surge voltages from the mains included).
7. For continuous use as series connection with an impedance to the mains, please refer to application note www.vishay.com/doc?28153.

Voltage Conditions for 6 Above

ALLOWED VOLTAGES	$T_{amb} \leq 85$ °C	85 °C < $T_{amb} \leq 105$ °C
Maximum continuous RMS voltage	U_{RAC}	0.8 x U_{RAC}
Maximum temperature RMS-overvoltage (< 24 h)	1.25 x U_{RAC}	U_{RAC}
Maximum peak voltage (V_{O-P}) (< 2 s)	1.6 x U_{RDC}	1.3 x U_{RDC}

Example

C = 3300 nF - 100 V used for the voltage signal shown in next figure.

U_{P-P} = 80 V; U_P = 70 V; T_1 = 0.5 ms; T_2 = 1 ms

The ambient temperature is 35 °C.

Checking conditions:

1. The peak voltage U_P = 70 V is lower than 100 V_{DC}.
2. The peak-to-peak voltage 80 V is lower than $2\sqrt{2} \times 63\ V_{AC} = 178\ U_{P-P}$.
3. The voltage pulse slope (dU/dt) = 80 V/500 µs = 0.16 V/µs
   This is lower than 8 V/µs (see “Specific Reference Data” for each version).
4. The dissipated power is 60 mW as calculated with fourier terms
   The temperature rise for $w_{max.}$ = 8.5 mm and pitch = 22.5 mm will be 60 mW/18 mW/°C = 3.3 °C
   This is lower than 15 °C temperature rise at 35 °C, according figure “Maximum allowed component temperature rise”
5. Not applicable
6. Not applicable
7. Not applicable

This document is subject to change without notice.
THE PRODUCTS DESCRIBED HEREIN AND THIS DOCUMENT ARE SUBJECT TO SPECIFIC DISCLAIMERS, SET FORTH AT www.vishay.com/doc?91000

Voltage Signal

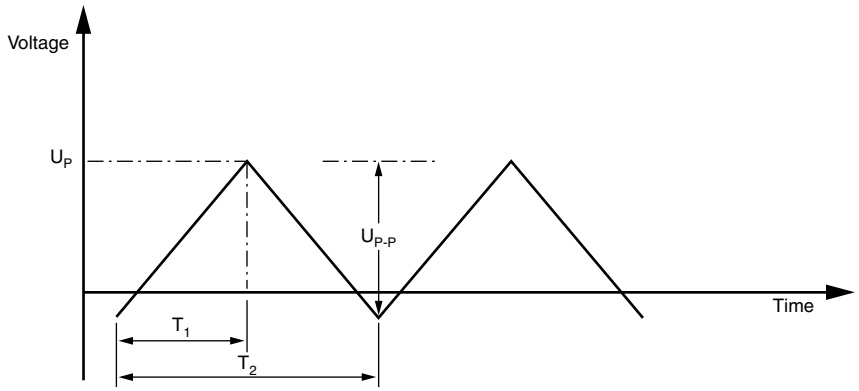

.

This document is subject to change without notice.
THE PRODUCTS DESCRIBED HEREIN AND THIS DOCUMENT ARE SUBJECT TO SPECIFIC DISCLAIMERS, SET FORTH AT www.vishay.com/doc?91000

Disclaimer

ALL PRODUCT, PRODUCT SPECIFICATIONS AND DATA ARE SUBJECT TO CHANGE WITHOUT NOTICE TO IMPROVE RELIABILITY, FUNCTION OR DESIGN OR OTHERWISE.

Vishay Intertechnology, Inc., its affiliates, agents, and employees, and all persons acting on its or their behalf (collectively, “Vishay”), disclaim any and all liability for any errors, inaccuracies or incompleteness contained in any datasheet or in any other disclosure relating to any product.

Vishay makes no warranty, representation or guarantee regarding the suitability of the products for any particular purpose or the continuing production of any product. To the maximum extent permitted by applicable law, Vishay disclaims (i) any and all liability arising out of the application or use of any product, (ii) any and all liability, including without limitation special, consequential or incidental damages, and (iii) any and all implied warranties, including warranties of fitness for particular purpose, non-infringement and merchantability.

Statements regarding the suitability of products for certain types of applications are based on Vishay's knowledge of typical requirements that are often placed on Vishay products in generic applications. Such statements are not binding statements about the suitability of products for a particular application. It is the customer's responsibility to validate that a particular product with the properties described in the product specification is suitable for use in a particular application. Parameters provided in datasheets and / or specifications may vary in different applications and performance may vary over time. All operating parameters, including typical parameters, must be validated for each customer application by the customer's technical experts. Product specifications do not expand or otherwise modify Vishay's terms and conditions of purchase, including but not limited to the warranty expressed therein.

Hyperlinks included in this datasheet may direct users to third-party websites. These links are provided as a convenience and for informational purposes only. Inclusion of these hyperlinks does not constitute an endorsement or an approval by Vishay of any of the products, services or opinions of the corporation, organization or individual associated with the third-party website. Vishay disclaims any and all liability and bears no responsibility for the accuracy, legality or content of the third-party website or for that of subsequent links.

Except as expressly indicated in writing, Vishay products are not designed for use in medical, life-saving, or life-sustaining applications or for any other application in which the failure of the Vishay product could result in personal injury or death. Customers using or selling Vishay products not expressly indicated for use in such applications do so at their own risk. Please contact authorized Vishay personnel to obtain written terms and conditions regarding products designed for such applications.

No license, express or implied, by estoppel or otherwise, to any intellectual property rights is granted by this document or by any conduct of Vishay. Product names and markings noted herein may be trademarks of their respective owners.

© 2024 VISHAY INTERTECHNOLOGY, INC. ALL RIGHTS RESERVED