Vitreous Wirewound Power Resistors

FEATURES

- High dissipation
- Embedded collars
- Insulated mounting
- Applicable standard: NFC 93214
- Material categorization: for definitions of compliance please see www.vishay.com/doc?99912

RoHS COMPLIANT

STANDARD ELECTRICAL SPECIFICATIONS

GLOBAL MODEL	POWER RATING W	RESISTANCE RANGE Ω	TOLERANCE ± %	$U_{LIM.}$ V
VNC 30 x 250	320	4.7 to 470K	5	3000
VNC 30 x 153	200	3.3 to 330K	5	1700
VNC 25 x 168	180	2.7 to 270K	5	1900
VNC 25 x 138	145	2.7 to 220K	5	1400
VNC 25 x 110	120	2.7 to 220K	5	1000
VNC 25 x 84	85	2.2 to 150K	5	650
VNC 20 x 265	230	3.9 to 390K	5	3000
VNC 20 x 165	140	2.7 to 270K	5	1700
VNC 20 x 140	120	2.2 to 220K	5	1400
VNC 20 x 117	90	1.8 to 220K	5	1100
VNC 20 x 102	85	1.2 to 180K	5	950
VNC 20 x 90	70	1.0 to 120K	5	900
VNC 16 x 94	55	2.2 to 68K	5	900
VNC 16 x 70	45	2.2 to 100K	5	650
VNC 13 x 70	35	1.8 to 56K	5	650
VNC 12 x 102	50	1.5 to 100K	5	950
VNC 12 x 76	40	1.0 to 82K	5	700
VNC 12 x 51	25	1.0 to 56K	5	450
VNC 12 x 38	18	1.0 to 33K	5	350
VNC 10 x 52	22	1.0 to 39K	5	450
VNC 10 x 44	18	1.0 to 33K	5	400
VNC 8 x 45	15	1.0 to 27K	5	400

NFC 93214 CHARACTERISTICS

GLOBAL MODEL	P_n W	RESISTANCE RANGE Ω
VN 30 x 153 (RB 37)	113	3.3 to 27K/82K
VN 20 x 102 (RB 35)	55	1.2 to 12K/39K
VN 12 x 76 (RB 33)	26	1.0 to 5.6K/18K
VN 12 x 51	22	-
VN 12 x 38 (RB 31)	14	1.0 to 2K/6.2K
VN 10 x 44	10	-

Note

- Resistance maximum value: normal limits for wire with diameter of: 63 μ/38 μ minimum.

TECHNICAL SPECIFICATIONS

PARAMETER	UNIT	RESISTOR CHARACTERISTICS
Temperature coefficient	ppm/°C	75 ppm/°C (typical)
Operating temperature range	°C	-55 to +450

For technical questions, contact: mcbfixedresistors@vishay.com
THIS DOCUMENT IS SUBJECT TO CHANGE WITHOUT NOTICE. THE PRODUCTS DESCRIBED HEREIN AND THIS DOCUMENT ARE SUBJECT TO SPECIFIC DISCLAIMERS, SET FORTH AT www.vishay.com/doc?91000

GENERAL CHARACTERISTICS	
Core	Ceramic
Winding	NiCr alloy
Coating	Vitreous enamel
Ohmic values	E12
Insulated mounting (PS)	On request

DIMENSIONS in millimeters **AND WEIGHT** in g

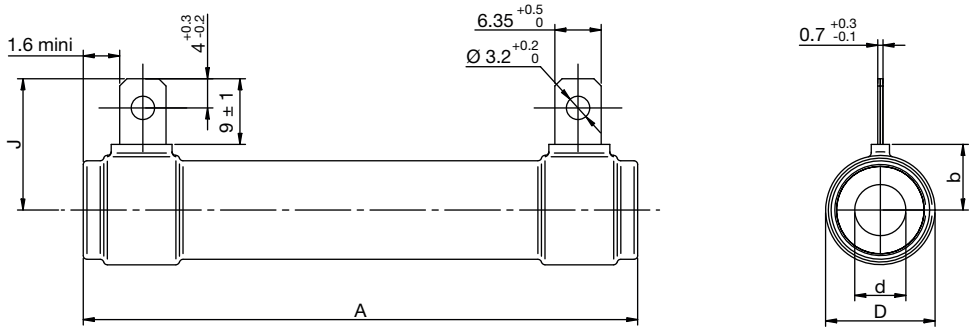

TYPE	30 x 250	30 x 153	25 x 168	25 x 138	25 x 110	25 x 84	20 x 265	20 x 165	20 x 140	20 x 117	20 x 102
A	250 ± 2	152.5 ± 1.5	168 ± 2	138 ± 2	110 ± 2	84 ± 2	265 ± 2	163 ± 2	140 ± 2	117 ± 2	101.5 ± 1.5
b max.	18.3	18.3	15.8	15.8	15.8	15.8	13.2	13.2	13.2	13.2	13.2
D max.	33	33	28	28	28	28	23	23	23	23	23
d	20 ± 0.4	20 ± 0.4	17 ± 0.35	17 ± 0.35	17 ± 0.35	17 ± 0.35	12 ± 0.5	12 ± 0.5	12 ± 0.5	12 ± 0.5	12 ± 0.5
J max.	31	31	28	28	28	28	24	24	24	24	24
Mass	300	200	180	130	100	70	220	135	115	80	70
TYPE	**20 x 90**	**16 x 94**	**16 x 70**	**13 x 70**	**12 x 102**	**12 x 76**	**12 x 51**	**12 x 38**	**10 x 52**	**10 x 44**	**8 x 45**
A	88 ± 1.5	94 ± 2	70 ± 1.5	70 ± 1.5	100 ± 2	76 ± 1.5	50 ± 1	38 ± 1.5	52 ± 1	44 ± 0.9	45 ± 1
b max.	13.2	11.2	11.2	9.7	9.2	9.2	9.2	9.2	9.2	8.2	7.2
D max.	23	19	19	16	15	15	15	15	13	13	11
d	12 ± 0.5	10 ± 0.3	10 ± 0.3	7 ± 0.21	7 ± 0.21	7 ± 0.21	7 ± 0.21	7 ± 0.21	6 ± 0.18	6 ± 0.18	5 ± 0.15
J max.	24	22	22	20	19	19	19	19	18	18	17
Mass	70	35	25	22	27	20	15	10	12	10	8

SPECIFIC NON-INDUCTIVE "A" VNC MODEL CHARACTERISTICS

TYPE	30 x 250A	30 x 153A	25 x 168A	25 x 138A	25 x 110A	25 x 84A	20 x 265A	20 x 165A	20 x 140A	20 x 117A	20 x 102A
$R_{min.}$	4.7 Ω	3.3 Ω	2.7 Ω	2.7 Ω	2.7 Ω	2.2 Ω	3.9 Ω	2.7 Ω	2.2 Ω	1.8 Ω	1.2 Ω
$R_{max.}$	1.2 kΩ	680 Ω	820 Ω	560 Ω	470 Ω	330 Ω	1.2 kΩ	820 Ω	560 Ω	470 Ω	390 Ω
TYPE	**20 x 90A**	**16 x 94A**	**16 x 70A**	**13 x 70A**	**12 x 102A**	**12 x 76A**	**12 x 51A**	**12 x 38A**	**10 x 52A**	**10 x 44A**	**8 x 45A**
$R_{min.}$	1.0 Ω	2.2 Ω	2.2 Ω	1.8 Ω	1.5 Ω	1.0 Ω	1.0 Ω	1.0 Ω	1.0 Ω	1.0 Ω	1.0 Ω
$R_{max.}$	330 Ω	330 Ω	270 Ω	270 Ω	470 Ω	270 Ω	150 Ω	100 Ω	150 Ω	120 Ω	120 Ω

For technical questions, contact: mcbfixedresistors@vishay.com
THIS DOCUMENT IS SUBJECT TO CHANGE WITHOUT NOTICE. THE PRODUCTS DESCRIBED HEREIN AND THIS DOCUMENT ARE SUBJECT TO SPECIFIC DISCLAIMERS, SET FORTH AT www.vishay.com/doc?91000

PERFORMANCES				
TESTS	CONDITIONS	NFC 93214 REQUIREMENTS		TYPICAL VALUES
Overloads	10 P_n (temp. nom.), 5 s	3 % or 0.05 Ω (1)		0.4 %
Climatic	-55 °C, 5 cycles, +200 °C	3 % or 0.05 Ω (1)	Collar insulated > 10^2 MΩ	0.2 %
Damp heat	56 days 95 % HR	2 % or 0.05 Ω (1)		0.1 %
Thermal shocks	P_n -55 °C	2 % or 0.05 Ω (1)		0.2 %
Shocks	Severity 50 A	0.5 % or 0.05 Ω (1)		0.25 %
Vibrations	Severity 55/10	0.5 % or 0.05 Ω (1)		0.25 %
Strength of terminals	40 N collar	1 % or 0.05 Ω (1)		0.1 %
Endurance	500 cycles P_n 90 min / 30 min	5 %		1 %

Note
(1) The higher of either value.

DISSIPATION

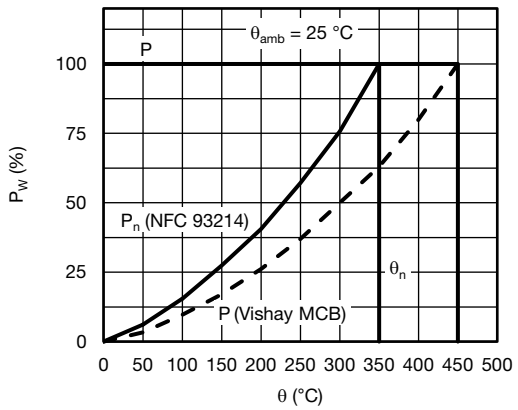

Power P_W as a Function of Surface Temperature
P(W) = f (Temperature Surface)

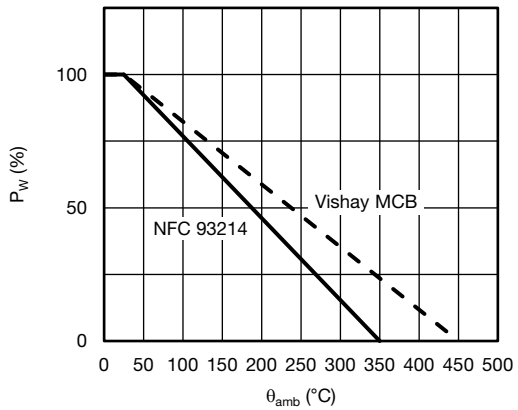

Derating in Power as a Function
of Ambient Temperature

OVERLOADS

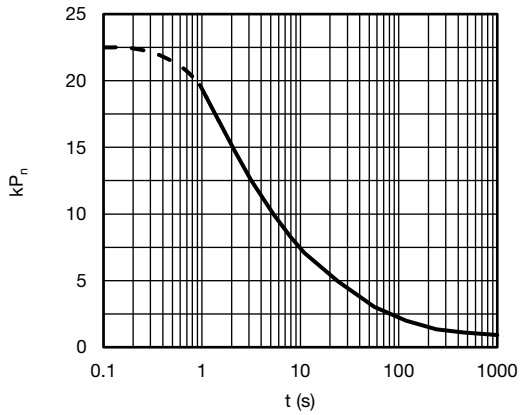

Intermittent Overloads
Exceptional Operation
Initial Temperature < 70 °C
k x P_n = f(t)

PERMISSIBLE ENERGY

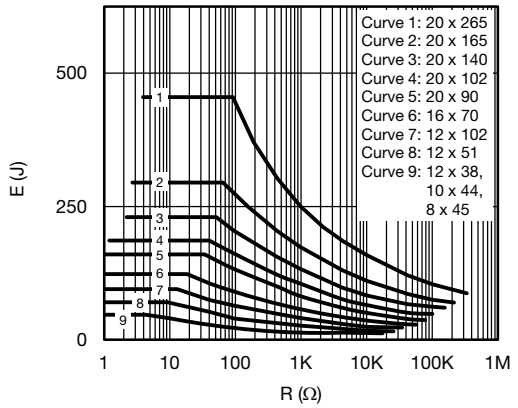

Repetitive Operation
Energy as a Function of R_n
Pulse Duration < 100 ms
E = f(R)

For technical questions, contact: mcbfixedresistors@vishay.com
THIS DOCUMENT IS SUBJECT TO CHANGE WITHOUT NOTICE. THE PRODUCTS DESCRIBED HEREIN AND THIS DOCUMENT ARE SUBJECT TO SPECIFIC DISCLAIMERS, SET FORTH AT www.vishay.com/doc?91000

OPTIONS (Consult us)

- Other values than E12 series
- Intermediate terminals

ORDERING INFORMATION

VNC	30 x 250	A	10K	± 5 %	XXX	BO4
MODEL	STYLE	NON-INDUCTIVE WINDING	RESISTANCE VALUE	TOLERANCE	CUSTOM DESIGN	PACKAGING
		Optional		± 5 % ± 10 % Other on request	Optional On request: special value, tolerance, terminals, etc.	

GLOBAL PART NUMBER INFORMATION

V	N	C	2	0	2	6	5	A	4	7	R	0	J	B	2	4	7
1			2					3	4				5	6	7		

1	2	3	4	5	6	7
PRODUCT TYPE	SIZE	OPTION (if applicable)	RESISTANCE VALUE	TOLERANCE	PACKAGING	INDUSTRIALIZATION NUMBER
VNC	**08045** **10044** **10052** **12038** **12051** **12076** **12102** **13070** **16070** **16094** **20090** **20102** **20117** **20140** **20165** **20265** **25084** **25110** **25138** **25168** **30153** **30250** **42362**	**A = non-inductive winding**	**The first three digits are significant figures and the last specifies the number of zeros to follow, R designates decimal point.** **4702 = 47 kΩ** **47R0 = 47 Ω**	**J = 5 %** **K = 10 %**	**B = box** **Box quantity depends of model and size**	**3 specific digits (if applicable)**

EXAMPLES

MODEL	DESCRIPTION	PART NUMBER
VNC	VNC 30X250 A 500U 5 % 999 BO4	VNC30250A5000JB999
VNC	VNC 25X168 100U 5 % BO5	VNC251681000JB

For technical questions, contact: mcbfixedresistors@vishay.com
THIS DOCUMENT IS SUBJECT TO CHANGE WITHOUT NOTICE. THE PRODUCTS DESCRIBED HEREIN AND THIS DOCUMENT ARE SUBJECT TO SPECIFIC DISCLAIMERS, SET FORTH AT www.vishay.com/doc?91000

Disclaimer

ALL PRODUCT, PRODUCT SPECIFICATIONS AND DATA ARE SUBJECT TO CHANGE WITHOUT NOTICE TO IMPROVE RELIABILITY, FUNCTION OR DESIGN OR OTHERWISE.

Vishay Intertechnology, Inc., its affiliates, agents, and employees, and all persons acting on its or their behalf (collectively, “Vishay”), disclaim any and all liability for any errors, inaccuracies or incompleteness contained in any datasheet or in any other disclosure relating to any product.

Vishay makes no warranty, representation or guarantee regarding the suitability of the products for any particular purpose or the continuing production of any product. To the maximum extent permitted by applicable law, Vishay disclaims (i) any and all liability arising out of the application or use of any product, (ii) any and all liability, including without limitation special, consequential or incidental damages, and (iii) any and all implied warranties, including warranties of fitness for particular purpose, non-infringement and merchantability.

Statements regarding the suitability of products for certain types of applications are based on Vishay's knowledge of typical requirements that are often placed on Vishay products in generic applications. Such statements are not binding statements about the suitability of products for a particular application. It is the customer's responsibility to validate that a particular product with the properties described in the product specification is suitable for use in a particular application. Parameters provided in datasheets and / or specifications may vary in different applications and performance may vary over time. All operating parameters, including typical parameters, must be validated for each customer application by the customer's technical experts. Product specifications do not expand or otherwise modify Vishay's terms and conditions of purchase, including but not limited to the warranty expressed therein.

Hyperlinks included in this datasheet may direct users to third-party websites. These links are provided as a convenience and for informational purposes only. Inclusion of these hyperlinks does not constitute an endorsement or an approval by Vishay of any of the products, services or opinions of the corporation, organization or individual associated with the third-party website. Vishay disclaims any and all liability and bears no responsibility for the accuracy, legality or content of the third-party website or for that of subsequent links.

Except as expressly indicated in writing, Vishay products are not designed for use in medical, life-saving, or life-sustaining applications or for any other application in which the failure of the Vishay product could result in personal injury or death. Customers using or selling Vishay products not expressly indicated for use in such applications do so at their own risk. Please contact authorized Vishay personnel to obtain written terms and conditions regarding products designed for such applications.

No license, express or implied, by estoppel or otherwise, to any intellectual property rights is granted by this document or by any conduct of Vishay. Product names and markings noted herein may be trademarks of their respective owners.

© 2024 VISHAY INTERTECHNOLOGY, INC. ALL RIGHTS RESERVED