Low Profile, Shielded Ferrite Power Inductors

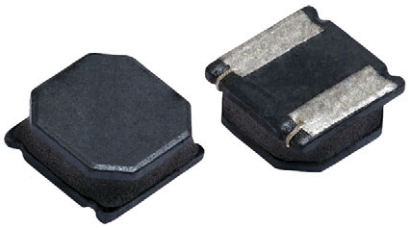

FEATURES

- 4.0 mm x 4.0 mm x 1.8 mm SMD package
- Low profile inductors from 0.47 μH to 330 μH
- Wirewound ferrite core encapsulated with iron embedded epoxy for magnetic shielding
- Material categorization: for definitions of compliance please see www.vishay.com/doc?99912

Pb-free
RoHS COMPLIANT
HALOGEN FREE
GREEN (5-2008)

LINKS TO ADDITIONAL RESOURCES

Product Page

APPLICATIONS

- DC/DC power supplies
- LCD displays
- Noise suppression and filtering
- Lighting drivers
- Battery powered devices

STANDARD ELECTRICAL SPECIFICATIONS

PART NUMBER	L_0 INDUCTANCE ± 20 % AT 100 kHz, 0.25 V, 0 A (μH)	DCR TYP. 25 °C (mΩ)	DCR MAX. 25 °C (mΩ)	HEAT RATING CURRENT DC TYP. I_{DC} (A) (1)	SATURATION CURRENT DC TYP. I_{SAT} (A) (2)
IFSC1515AHERR47M01	0.47	15	18	5.5	5.70
IFSC1515AHERR56M01	0.56	17	22	5.40	5.60
IFSC1515AHERR68M01	0.68	19	25	5.00	5.50
IFSC1515AHER1R0M01	1.0	20	25	4.30	3.85
IFSC1515AHER1R2M01	1.2	25	30	3.80	3.70
IFSC1515AHER1R5M01	1.5	33	40	3.40	3.60
IFSC1515AHER1R8M01	1.8	34	41	3.20	3.20
IFSC1515AHER2R2M01	2.2	35	45	3.10	3.10
IFSC1515AHER3R3M01	3.3	45	56	2.75	2.45
IFSC1515AHER4R7M01	4.7	69	89	2.30	2.05
IFSC1515AHER6R8M01	6.8	90	115	2.10	1.75
IFSC1515AHER8R2M01	8.2	105	132	1.80	1.65
IFSC1515AHER100M01	10.0	134	169	1.50	1.55
IFSC1515AHER150M01	15.0	185	222	1.45	1.10
IFSC1515AHER220M01	22.0	250	315	1.20	0.95
IFSC1515AHER330M01	33.0	405	486	0.90	0.70
IFSC1515AHER470M01	47.0	495	594	0.80	0.58
IFSC1515AHER680M01	68.0	885	1062	0.58	0.48
IFSC1515AHER101M01	100.0	1545	1854	0.52	0.46
IFSC1515AHER221M01	220.0	3150	3780	0.30	0.33
IFSC1515AHER331M01	330.0	4200	5040	0.29	0.26

Notes

- All test data is referenced to 25 °C ambient
- Operating temperature range -55 °C to +125 °C
- Resistance to solder heat: 260 °C for 10 s (3 times max. through reflow)

(1) DC current (A) that will cause an approximate ΔT of 40 °C
(2) DC current (A) that will cause L_0 to drop approximately 30 %

For technical questions, contact: magnetics@vishay.com
THIS DOCUMENT IS SUBJECT TO CHANGE WITHOUT NOTICE. THE PRODUCTS DESCRIBED HEREIN AND THIS DOCUMENT ARE SUBJECT TO SPECIFIC DISCLAIMERS, SET FORTH AT www.vishay.com/doc?91000

DIMENSIONS in inches [millimeters]

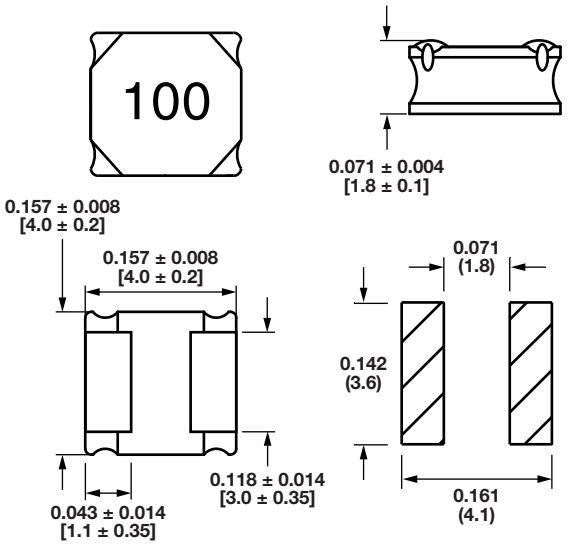

DESCRIPTION

IFSC-1515AH-01	**3.3 µH**	**± 20 %**	**ER**	**e3**
MODEL	INDUCTANCE VALUE	INDUCTANCE TOLERANCE	PACKAGE CODE	JEDEC® LEAD (Pb)-FREE STANDARD

GLOBAL PART NUMBER

I F S C	1 5 1 5 A H	E R	3 R 3	M	0 1
PRODUCT FAMILY	SIZE	PACKAGE CODE	INDUCTANCE VALUE	TOLERANCE	SERIES
		ER = tape and reel	**3R3** = 3.3 Ω	**M** = 20 %	

For technical questions, contact: magnetics@vishay.com

THIS DOCUMENT IS SUBJECT TO CHANGE WITHOUT NOTICE. THE PRODUCTS DESCRIBED HEREIN AND THIS DOCUMENT ARE SUBJECT TO SPECIFIC DISCLAIMERS, SET FORTH AT www.vishay.com/doc?91000

Disclaimer

ALL PRODUCT, PRODUCT SPECIFICATIONS AND DATA ARE SUBJECT TO CHANGE WITHOUT NOTICE TO IMPROVE RELIABILITY, FUNCTION OR DESIGN OR OTHERWISE.

Vishay Intertechnology, Inc., its affiliates, agents, and employees, and all persons acting on its or their behalf (collectively, “Vishay”), disclaim any and all liability for any errors, inaccuracies or incompleteness contained in any datasheet or in any other disclosure relating to any product.

Vishay makes no warranty, representation or guarantee regarding the suitability of the products for any particular purpose or the continuing production of any product. To the maximum extent permitted by applicable law, Vishay disclaims (i) any and all liability arising out of the application or use of any product, (ii) any and all liability, including without limitation special, consequential or incidental damages, and (iii) any and all implied warranties, including warranties of fitness for particular purpose, non-infringement and merchantability.

Statements regarding the suitability of products for certain types of applications are based on Vishay's knowledge of typical requirements that are often placed on Vishay products in generic applications. Such statements are not binding statements about the suitability of products for a particular application. It is the customer's responsibility to validate that a particular product with the properties described in the product specification is suitable for use in a particular application. Parameters provided in datasheets and / or specifications may vary in different applications and performance may vary over time. All operating parameters, including typical parameters, must be validated for each customer application by the customer's technical experts. Product specifications do not expand or otherwise modify Vishay's terms and conditions of purchase, including but not limited to the warranty expressed therein.

Hyperlinks included in this datasheet may direct users to third-party websites. These links are provided as a convenience and for informational purposes only. Inclusion of these hyperlinks does not constitute an endorsement or an approval by Vishay of any of the products, services or opinions of the corporation, organization or individual associated with the third-party website. Vishay disclaims any and all liability and bears no responsibility for the accuracy, legality or content of the third-party website or for that of subsequent links.

Vishay products are not designed for use in life-saving or life-sustaining applications or any application in which the failure of the Vishay product could result in personal injury or death unless specifically qualified in writing by Vishay. Customers using or selling Vishay products not expressly indicated for use in such applications do so at their own risk. Please contact authorized Vishay personnel to obtain written terms and conditions regarding products designed for such applications.

No license, express or implied, by estoppel or otherwise, to any intellectual property rights is granted by this document or by any conduct of Vishay. Product names and markings noted herein may be trademarks of their respective owners.

© 2024 VISHAY INTERTECHNOLOGY, INC. ALL RIGHTS RESERVED

THIS DOCUMENT IS SUBJECT TO CHANGE WITHOUT NOTICE. THE PRODUCTS DESCRIBED HEREIN AND THIS DOCUMENT ARE SUBJECT TO SPECIFIC DISCLAIMERS, SET FORTH AT www.vishay.com/doc?91000