128 x 64 Graphic LCD

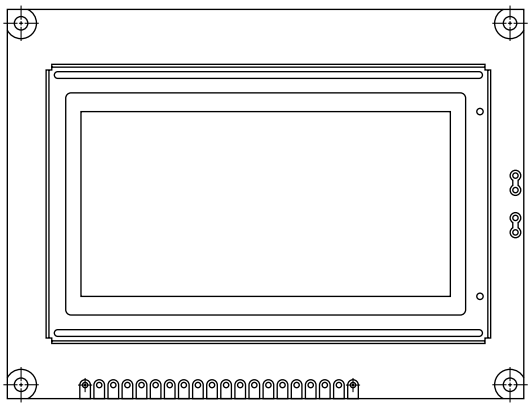

FEATURES

- Type: Graphic
- Display format: 128 x 64 dots
- Built-in controller: Samsung KS 0107/KS 0108 (or equivalent)
- Duty cycle: 1/64
- + 5 V power supply
- N.V. built-in
- Compliant to RoHS directive 2002/95/EC

Pb-free
RoHS COMPLIANT

MECHANICAL DATA

ITEM	STANDARD VALUE	UNIT
Module Dimension	93.0 x 70.0	mm
Viewing Area	72.0 x 40.0	
Dot Size	0.48 x 0.48	
Dot Pitch	0.52 x 0.52	
Mounting Hole	88.0 x 65.0	
Character Size	N/a	

ABSOLUTE MAXIMUM RATINGS

ITEM	SYMBOL	STANDARD VALUE			UNIT
		MIN.	TYP.	MAX.	
Power Supply	V_{DD} to V_{SS}	4.75	5.0	5.25	V
Input Voltage	V_I	- 0.3	-	V_{DD}	

Note

- V_{SS} = 0 V, V_{DD} = 5.0 V

ELECTRICAL CHARACTERISTICS

ITEM	SYMBOL	CONDITION	STANDARD VALUE			UNIT
			MIN.	TYP.	MAX.	
Input Voltage	V_{DD}	L level	0.7 V_{DD}	-	V_{DD}	V
	V_{IO}	H level	0	-	0.3 V_{DD}	
Supply Current	I_{DD}	V_{DD} = + 5 V	-	2.5	7.5	mA
Recommended LC Driving Voltage for Normal Temperature Version Module	V_{DD} to V_0	- 20 °C	9.9	10.4	10.9	V
		0 °C	9.7	10.2	10.7	
		25 °C	8.9	9.4	9.9	
		50 °C	8.6	9.1	9.6	
		70 °C	8.4	8.9	9.4	
LED Forward Voltage	V_F	25 °C	-	4.2	4.6	V
LED Forward Current - Array	I_F	25 °C	-	330	660	mA
LED Forward Current - Edge			-	120	240	
EL Power Supply Current	I_{EL}	V_{EL} = 110 V_{AC}, 400 Hz	-	-	5.0	mA

OPTIONS

PROCESS COLOR						BACKLIGHT			
TN	STN Gray	STN Yellow	STN Blue	FSTN B&W	STN Color	None	LED	EL	CCFL
	x	x	x	x		x	x	x	

For detailed information, please see the “Product Numbering System” document.

INTERFACE PIN FUNCTION

PIN NO.	SYMBOL	FUNCTION
1	V_{SS}	Ground
2	V_{DD}	Power supply (+ 5 V)
3	V_0	Contrast adjustment
4	D/I	Data/instruction
5	R/$\overline{W}$	Data read/write
6	E	H → L enable signal
7	DB0	Data bus line
8	DB1	Data bus line
9	DB2	Data bus line
10	DB3	Data bus line
11	DB4	Data bus line
12	DB5	Data bus line
13	DB6	Data bus line
14	DB7	Data bus line
15	CS1	Chip select for IC1
16	CS2	Chip select for IC1
17	$\overline{RST}$	Reset
18	V_{EE}	Negative voltage output
19	A	Power supply for LED (+ 4.2 V), R_A = 0 Ω
20	K	Power supply for LED (0 V)

DIMENSIONS in millimeters

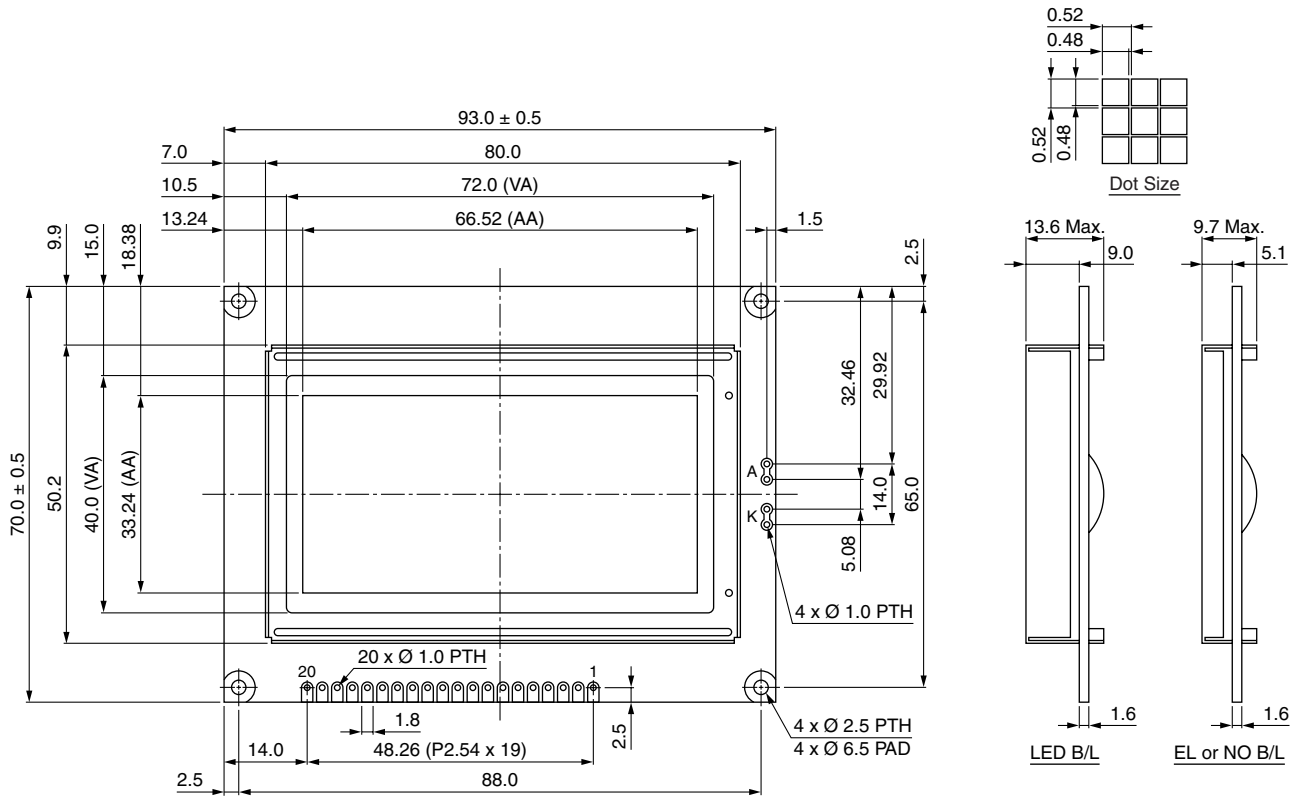

Disclaimer

ALL PRODUCT, PRODUCT SPECIFICATIONS AND DATA ARE SUBJECT TO CHANGE WITHOUT NOTICE TO IMPROVE RELIABILITY, FUNCTION OR DESIGN OR OTHERWISE.

Vishay Intertechnology, Inc., its affiliates, agents, and employees, and all persons acting on its or their behalf (collectively, "Vishay"), disclaim any and all liability for any errors, inaccuracies or incompleteness contained in any datasheet or in any other disclosure relating to any product.

Vishay makes no warranty, representation or guarantee regarding the suitability of the products for any particular purpose or the continuing production of any product. To the maximum extent permitted by applicable law, Vishay disclaims (i) any and all liability arising out of the application or use of any product, (ii) any and all liability, including without limitation special, consequential or incidental damages, and (iii) any and all implied warranties, including warranties of fitness for particular purpose, non-infringement and merchantability.

Statements regarding the suitability of products for certain types of applications are based on Vishay's knowledge of typical requirements that are often placed on Vishay products in generic applications. Such statements are not binding statements about the suitability of products for a particular application. It is the customer's responsibility to validate that a particular product with the properties described in the product specification is suitable for use in a particular application. Parameters provided in datasheets and / or specifications may vary in different applications and performance may vary over time. All operating parameters, including typical parameters, must be validated for each customer application by the customer's technical experts. Product specifications do not expand or otherwise modify Vishay's terms and conditions of purchase, including but not limited to the warranty expressed therein.

Except as expressly indicated in writing, Vishay products are not designed for use in medical, life-saving, or life-sustaining applications or for any other application in which the failure of the Vishay product could result in personal injury or death. Customers using or selling Vishay products not expressly indicated for use in such applications do so at their own risk. Please contact authorized Vishay personnel to obtain written terms and conditions regarding products designed for such applications.

No license, express or implied, by estoppel or otherwise, to any intellectual property rights is granted by this document or by any conduct of Vishay. Product names and markings noted herein may be trademarks of their respective owners.