16 x 2 Character OLED

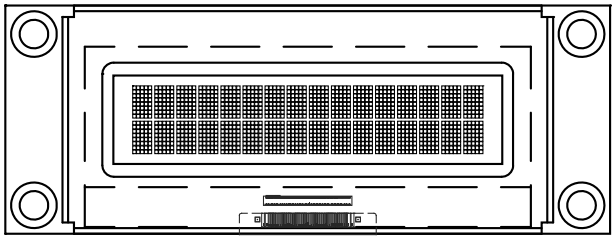

FEATURES

- Type: character
- Display format: 16 x 2 characters
- Built-in controller: OLED-0010
- Duty cycle: 1/16
- +5 V power supply
- Interface: 6800
- Material categorization: for definitions of compliance please see www.vishay.com/doc?99912

Pb-free

RoHS COMPLIANT

MECHANICAL DATA

ITEM	STANDARD VALUE	UNIT
Module dimension	53.0 x 20.0 x 7.6 (max.)	mm
Viewing area	36.0 x 10.0	
Active area	30.69 x 5.94	
Dot size	0.30 x 0.32	
Dot pitch	0.34 x 0.36	
Mounting hole	48.0 x 15.0	
Character size	1.67 x 2.84	
Character pitch	1.94 x 3.11	

ABSOLUTE MAXIMUM RATINGS

ITEM	SYMBOL	STANDARD VALUE		UNIT
		MIN.	MAX.	
Supply voltage for logic	V_{DD} to V_{SS}	-0.3	5.3	V
Operating temperature	T_{OP}	-40	+80	°C
Storage temperature	T_{STG}	-40	+80	

ELECTRICAL CHARACTERISTICS

ITEM	SYMBOL	CONDITION	STANDARD VALUE			UNIT
			MIN.	TYP.	MAX.	
Supply voltage for logic	V_{DD} to V_{SS}	-	4.8	5.0	5.3	V
Input high voltage	V_{IH}	-	0.9 V_{DD}	-	V_{DD}	
Input low voltage	V_{IL}	-	GND	-	0.1 V_{DD}	
Output high voltage	V_{OH}	I_{OH} = -0.5 mA	0.8 V_{DD}	-	V_{DD}	
Output low voltage	V_{OL}	I_{OL} = 0.5 mA	GND	-	0.2 V_{DD}	
50 % check board operating current	I_{DD}	V_{DD} = 5 V	8	10	12	mA

Note

- When you use 5 V for V_{DD}, please do not use 3 V or 3.3 V for logic I/O, this will cause module does not work.

OPTIONS

EMITTING COLOR					MOQ				
YELLOW	GREEN	RED	BLUE	WHITE	YELLOW	GREEN	RED	BLUE	WHITE
-	-	-	Yes	-	-	-	-	Yes	-

For technical questions, contact: displays@vishay.com

THIS DOCUMENT IS SUBJECT TO CHANGE WITHOUT NOTICE. THE PRODUCTS DESCRIBED HEREIN AND THIS DOCUMENT ARE SUBJECT TO SPECIFIC DISCLAIMERS, SET FORTH AT www.vishay.com/doc?91000

INTERFACE PIN FUNCTION

PIN NO.	SYMBOL	FUNCTION
1	V_{SS}	Ground (0 V)
2	V_{DD}	Supply voltage for logic (5.0 V)
3	NC	No connection
4	RS	H / L, H: data; L: instruction code
5	R / W	H / L, H: read (module → MPU); L: write (MPU → module)
6	E	H, H → L, chip enable signal
7	DB0	H / L, data bit 0
8	DB1	H / L, data bit 1
9	DB2	H / L, data bit 2
10	DB3	H / L, data bit 3
11	DB4	H / L, data bit 4
12	DB5	H / L, data bit 5
13	DB6	H / L, data bit 6
14	DB7	H / L, data bit 7
15	NC	No connection
16	NC	No connection

DIMENSIONS in millimeters

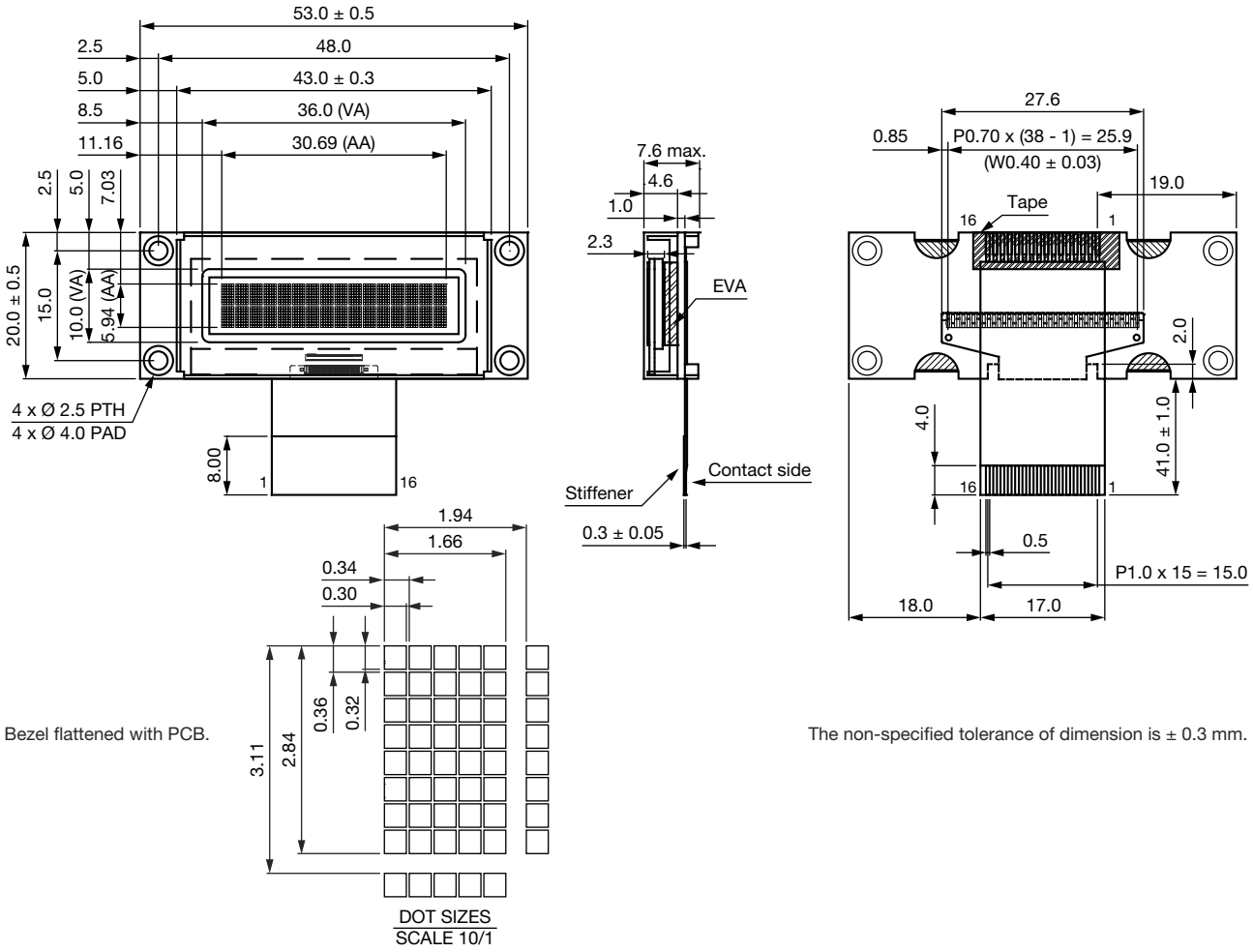

Bezel flattened with PCB.

The non-specified tolerance of dimension is ± 0.3 mm.

For technical questions, contact: displays@vishay.com
THIS DOCUMENT IS SUBJECT TO CHANGE WITHOUT NOTICE. THE PRODUCTS DESCRIBED HEREIN AND THIS DOCUMENT ARE SUBJECT TO SPECIFIC DISCLAIMERS, SET FORTH AT www.vishay.com/doc?91000

1.Module Classification Information

OLED	016	O	002	B	B	P	P	5	N	0	0	000
①	②	③	④	⑤	⑥	⑦	⑧	⑨	⑩	⑪	⑫	⑬

1	Brand: Vishay Intertechnology, Inc.		
2	Horizontal Format: 16 Columns		
3	Display Type: N→Character Type, H→Graphic Type, Y→Tab Type, O→Cog		
4	Vertical Format: 2 Lines		
5	Serials code		
6	Emitting Color	A：Amber	R：RED
		B：Blue	W：White
		G：Green	L：Yellow
7	Polarizer	P：With Polarizer; N: Without Polarizer	
8	Display Mode	P：Passive Matrix ; A: Active Matrix	
9	Driver Voltage	3: 3.0 V; 5: 5.0V	
10	Touch Panel	N：Without touch panel; T: With touch panel	
11	Products type	0：Standard type 1. Sunlight Readable type 2. Transparent OLED (TOLED) 3. Flexible OLED 4. OLED for Lighting	
12	Product grades	Product grades: 0：Standard(A-level) 2：B-level 3：C-level 4：high class(AA-level) 5：Customer offerings	
13	Serial No.	Application serial number(000~ZZZ)	

For technical questions, contact: displays@vishay.com
THIS DOCUMENT IS SUBJECT TO CHANGE WITHOUT NOTICE. THE PRODUCTS DESCRIBED HEREIN AND THIS DOCUMENT ARE SUBJECT TO SPECIFIC DISCLAIMERS, SET FORTH AT www.vishay.com/doc?91000

General Specification

Item	Dimension	Unit
Number of Characters	16 characters x 2 Lines	—
Module dimension	53.0 x 20.0 x 7.6 (MAX)	mm
View area	36.0 x 10.0	mm
Active area	30.69 x 5.94	mm
Dot size	0.30 x 0.32	mm
Dot pitch	0.34x 0.36	mm
Character size	1.67 x 2.84	mm
Character pitch	1.94 x 3.11	mm
Panel type	OLED , Blue	
Duty	1/16	

For technical questions, contact: displays@vishay.com
THIS DOCUMENT IS SUBJECT TO CHANGE WITHOUT NOTICE. THE PRODUCTS DESCRIBED HEREIN AND THIS DOCUMENT ARE SUBJECT TO SPECIFIC DISCLAIMERS, SET FORTH AT www.vishay.com/doc?91000

3. Contour Drawing & Block Diagram

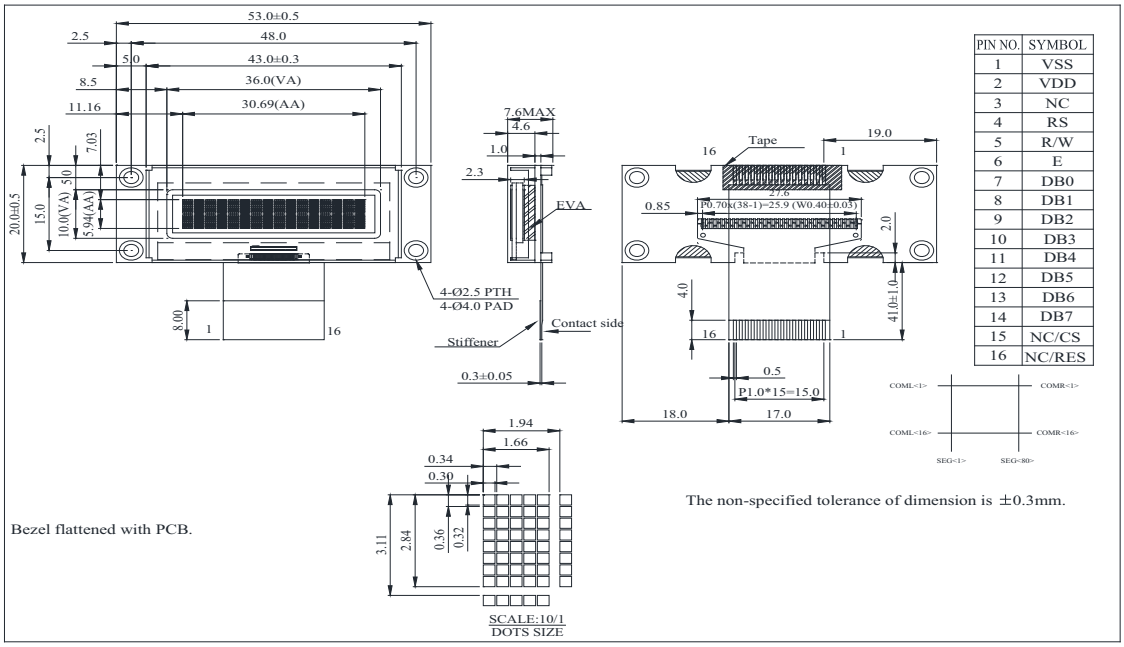

PIN NO.	SYMBOL
1	VSS
2	VDD
3	NC
4	RS
5	R/W
6	E
7	DB0
8	DB1
9	DB2
10	DB3
11	DB4
12	DB5
13	DB6
14	DB7
15	NC/CS
16	NC/RES

For technical questions, contact: displays@vishay.com
THIS DOCUMENT IS SUBJECT TO CHANGE WITHOUT NOTICE. THE PRODUCTS DESCRIBED HEREIN AND THIS DOCUMENT ARE SUBJECT TO SPECIFIC DISCLAIMERS, SET FORTH AT www.vishay.com/doc?91000

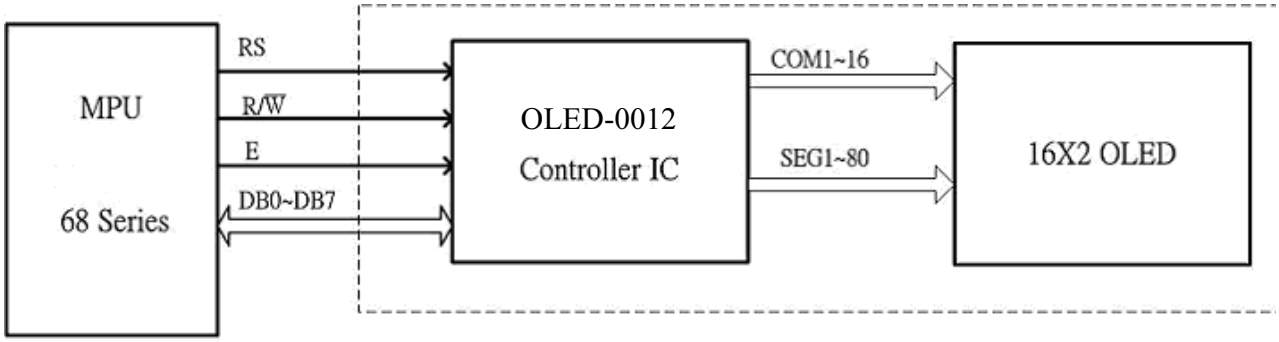

Address Format	DB7	DB6	DB5	DB4	DB3	DB2	DB1	DB0
CA (Character Address)	1	ADD6	ADD5	ADD4	ADD3	ADD2	ADD1	ADD0

1	2	3	4	.....	.....	13	14	15	16
CA10000000	CA10000001	CA10000010	CA10000011	.....	.....	CA10001100	CA10001101	CA10001110	CA10001111
CA11000000	CA11000001	CA11000010	CA11000011	.....	.....	CA11001100	CA11001101	CA11001110	CA11001111

For technical questions, contact: displays@vishay.com
THIS DOCUMENT IS SUBJECT TO CHANGE WITHOUT NOTICE. THE PRODUCTS DESCRIBED HEREIN AND THIS DOCUMENT ARE SUBJECT TO SPECIFIC DISCLAIMERS, SET FORTH AT www.vishay.com/doc?91000

4. Interface Pin Function

Pin No.	Symbol	I/O	Description
1	VSS	0V	Ground
2	VDD	5.0V	Supply Voltage for logic
3	NC	—	No connection
4	RS	H/L	H: DATA, L: Instruction code
5	R/W	H/L	H: Read (Module --> MPU) L: Write(MPU --> Module)
6	E	H,H→L	Chip enable signal
7	DB0	H/L	Data bit 0
8	DB1	H/L	Data bit 1
9	DB2	H/L	Data bit 2
10	DB3	H/L	Data bit 3
11	DB4	H/L	Data bit 4
12	DB5	H/L	Data bit 5
13	DB6	H/L	Data bit 6
14	DB7	H/L	Data bit 7
15	NC	—	No connection
16	NC	—	No connection

For technical questions, contact: displays@vishay.com
THIS DOCUMENT IS SUBJECT TO CHANGE WITHOUT NOTICE. THE PRODUCTS DESCRIBED HEREIN AND THIS DOCUMENT ARE SUBJECT TO SPECIFIC DISCLAIMERS, SET FORTH AT www.vishay.com/doc?91000

5.Absolute Maximum Ratings

Item	Symbol	Min	Max	Unit	Notes
Operating Temperature	T_{OP}	-40	+80	℃	
Storage Temperature	TST	-40	+80	℃	
Supply Voltage For Logic	VDD-VSS	-0.3	5.3	V	

For technical questions, contact: displays@vishay.com
THIS DOCUMENT IS SUBJECT TO CHANGE WITHOUT NOTICE. THE PRODUCTS DESCRIBED HEREIN AND THIS DOCUMENT ARE SUBJECT TO SPECIFIC DISCLAIMERS, SET FORTH AT www.vishay.com/doc?91000

6.Electrical Characteristics

Item	Symbol	Condition	Min	Typ	Max	Unit
Supply Voltage For Logic	VDD-VSS	—	4.8	5.0	5.3	V
Input High Volt.	VIH	—	0.9 VDD	—	VDD	V
Input Low Volt.	VIL	—	GND	—	0.1VDD	V
Output High Volt.	VOH	IOH=-0.5mA	0.8 VDD	—	VDD	V
Output Low Volt.	VOL	IOL=0.5mA	GND	—	0.2 VDD	V
50% Check Board Operating Current	IDD	VDD=5V	8	10	12	mA

Note: When you use 5V for Vdd please don't use 3V or 3.3V for logic I/O this will cause module does not work.

For technical questions, contact: displays@vishay.com
THIS DOCUMENT IS SUBJECT TO CHANGE WITHOUT NOTICE. THE PRODUCTS DESCRIBED HEREIN AND THIS DOCUMENT ARE SUBJECT TO SPECIFIC DISCLAIMERS, SET FORTH AT www.vishay.com/doc?91000

7.Optical Characteristics

Item	Symbol	Condition	Min	Typ	Max	Unit
View Angle	(V)θ		160			deg
	(H)φ		160			deg
Contrast Ratio	CR	Dark	2000:1		—	—
Response Time	T rise	—		10		μs
	T fall	—		10		μs
Display with 50% check Board Brightness			60	80		cd/m2
CIEx(Blue)		(CIE1931)	0.12	0.16	0.20	
CIEy(Blue)		(CIE1931)	0.19	0.23	0.27	

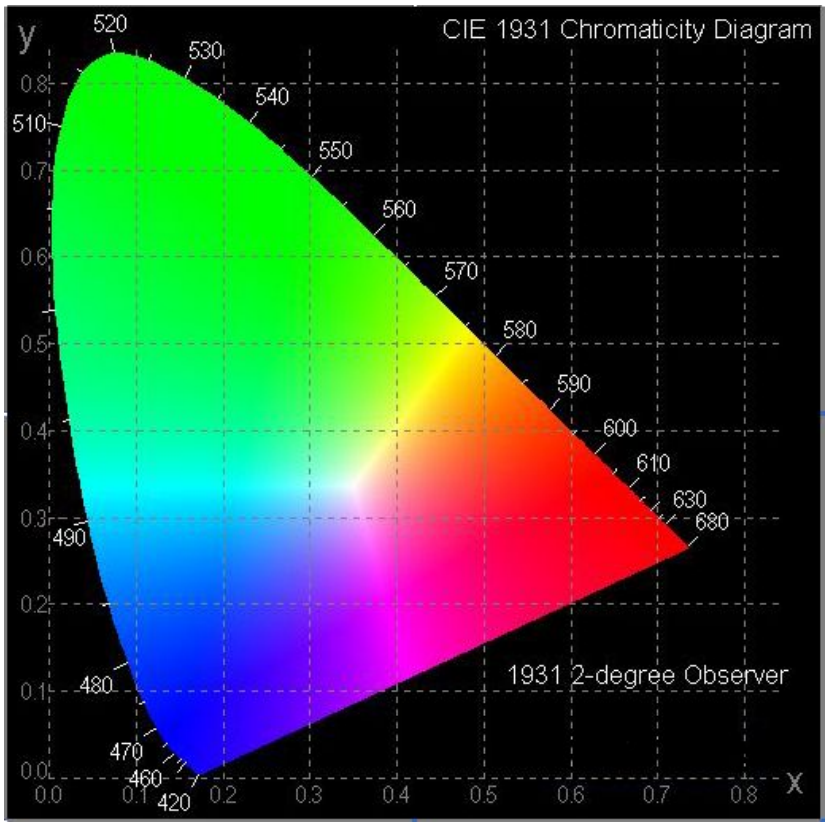

For technical questions, contact: displays@vishay.com
THIS DOCUMENT IS SUBJECT TO CHANGE WITHOUT NOTICE. THE PRODUCTS DESCRIBED HEREIN AND THIS DOCUMENT ARE SUBJECT TO SPECIFIC DISCLAIMERS, SET FORTH AT www.vishay.com/doc?91000

8.OLED Lifetime

ITEM	Conditions	Min	Typ	Remark
Operating Life Time	Ta=25℃ / Initial 50% check board brightness Typical Value	20,000 Hrs	—	Note

Notes:
1. Life time is defined the amount of time when the luminance has decayed to <50% of the initial value.
2. This analysis method uses life data obtained under accelerated conditions to extrapolate an estimated probability density function (*pdf*) for the product under normal use conditions.
3. Screen saving mode will extend OLED lifetime.

For technical questions, contact: displays@vishay.com
THIS DOCUMENT IS SUBJECT TO CHANGE WITHOUT NOTICE. THE PRODUCTS DESCRIBED HEREIN AND THIS DOCUMENT ARE SUBJECT TO SPECIFIC DISCLAIMERS, SET FORTH AT www.vishay.com/doc?91000

9.Reliability

Content of Reliability Test

Environmental Test			
Test Item	**Content of Test**	**Test Condition**	**Applicable Standard**
High Temperature storage	Endurance test applying the high storage temperature for a long time.	80 ℃ 240hrs	——
Low Temperature storage	Endurance test applying the low storage temperature for a long time.	-40℃ 240hrs	——
High Temperature Operation	Endurance test applying the electric stress (Voltage & Current) and the thermal stress to the element for a long time.	80 ℃ 240hrs	——
Low Temperature Operation	Endurance test applying the electric stress under low temperature for a long time.	-40 ℃ 240hrs	——
High Temperature/ Humidity Storage	Endurance test applying the high temperature and high humidity storage for a long time.	60℃,90% RH 240hrs	——
Temperature Cycle	Endurance test applying the low and high temperature cycle. -40 ℃ 25℃ 30min 5min 30min 1 cycle	-40 ℃/80℃ 100 cycles	——
Mechanical Test			
Vibration test	Endurance test applying the vibration during transportation and using.	10~22Hz→1.5mmp-p 22~500Hz→1.5G Total 0.5hr	——
Shock test	Constructional and mechanical endurance test applying the shock during transportation.	50G Half sin wave 11 ms 3 times of each direction	——
Atmospheric pressure test	Endurance test applying the atmospheric pressure during transportation by air.	115mbar 40hrs	——
Others			
Static electricity test	Endurance test applying the electric stress to the terminal.	VS=±600V(contact), ±800v(air), RS=330Ω CS=150pF 10 times	——

*** Supply voltage for OLED system =Operating voltage at 25℃

For technical questions, contact: displays@vishay.com
THIS DOCUMENT IS SUBJECT TO CHANGE WITHOUT NOTICE. THE PRODUCTS DESCRIBED HEREIN AND THIS DOCUMENT ARE SUBJECT TO SPECIFIC DISCLAIMERS, SET FORTH AT www.vishay.com/doc?91000

Test and measurement conditions

1. All measurements shall not be started until the specimens attain to temperature stability. After the completion of the described reliability test, the samples were left at room temperature for 2 hrs prior to conducting the failure test at 23±5°C; 55±15% RH.
2. All-pixels-on is used as operation test pattern.
3. The degradation of Polarizer are ignored for High Temperature storage, High Temperature/ Humidity Storage, Temperature Cycle

Evaluation criteria

1. The function test is OK.
2. No observable defects.
3. Luminance: > 50% of initial value.
4. Current consumption: within ± 50% of initial value.

APPENDIX:

RESIDUE IMAGE

Because the pixels are lighted in different time, the luminance of active pixels may reduce or differ from inactive pixels. Therefore, the residue image will occur. To avoid the residue image, every pixel needs to be lighted up uniformly.

For technical questions, contact: displays@vishay.com
THIS DOCUMENT IS SUBJECT TO CHANGE WITHOUT NOTICE. THE PRODUCTS DESCRIBED HEREIN AND THIS DOCUMENT ARE SUBJECT TO SPECIFIC DISCLAIMERS, SET FORTH AT www.vishay.com/doc?91000

10.Inspection specification

<table>
<tr><th>NO</th><th>Item</th><th>Criterion</th><th>AQL</th></tr>
<tr><td>01</td><td>Electrical Testing</td><td>1.1 Missing vertical, horizontal segment, segment contrast defect.
1.2 Missing character , dot or icon.
1.3 Display malfunction.
1.4 No function or no display.
1.5 Current consumption exceeds product specifications.
1.6 OLED viewing angle defect.
1.7 Mixed product types.
1.8 Contrast defect.</td><td>0.65</td></tr>
<tr><td>02</td><td>Black or white spots on OLED (display only)</td><td>2.1 White and black spots on display ≦0.25mm, no more than three white or black spots present.
2.2 Densely spaced: No more than two spots or lines within 3mm.</td><td>2.5</td></tr>
<tr><td>03</td><td>OLED black spots, white spots, contamination (non-display)</td><td>3.1 Round type : As following drawing
Φ=(x + y) / 2
 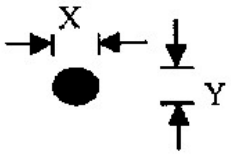

<table>
<tr><th>SIZE</th><th>Acceptable Q TY</th></tr>
<tr><td>Φ≦0.10</td><td>Accept no dense</td></tr>
<tr><td>0.10＜ Φ≦0.20</td><td>2</td></tr>
<tr><td>0.20＜ Φ≦0.25</td><td>1</td></tr>
<tr><td>0.25＜Φ</td><td>0</td></tr>
</table></td><td>2.5</td></tr>
<tr><td></td><td></td><td>3.2 Line type : (As following drawing)
 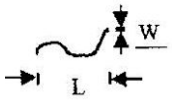

<table>
<tr><th>Length</th><th>Width</th><th>Acceptable Q TY</th></tr>
<tr><td>---</td><td>W≦0.02</td><td>Accept no dense</td></tr>
<tr><td>L≦3.0</td><td>0.02＜W≦0.03</td><td rowspan="2">2</td></tr>
<tr><td>L≦2.5</td><td>0.03＜W≦0.05</td></tr>
<tr><td>---</td><td>0.05＜W</td><td>As round type</td></tr>
</table></td><td>2.5</td></tr>
<tr><td>04</td><td>Polarizer bubbles</td><td>If bubbles are visible, judge using black spot specifications, not easy to find, must check in specify direction.
<table>
<tr><th>Size Φ</th><th>Acceptable Q TY</th></tr>
<tr><td>Φ≦0.20</td><td>Accept no dense</td></tr>
<tr><td>0.20＜Φ≦0.50</td><td>3</td></tr>
<tr><td>0.50＜Φ≦1.00</td><td>2</td></tr>
<tr><td>1.00＜Φ</td><td>0</td></tr>
<tr><td>Total Q TY</td><td>3</td></tr>
</table></td><td>2.5</td></tr>
</table>

For technical questions, contact: displays@vishay.com
THIS DOCUMENT IS SUBJECT TO CHANGE WITHOUT NOTICE. THE PRODUCTS DESCRIBED HEREIN AND THIS DOCUMENT ARE SUBJECT TO SPECIFIC DISCLAIMERS, SET FORTH AT www.vishay.com/doc?91000

<table>
<tr><td>NO</td><td>Item</td><td>Criterion</td><td>AQL</td></tr>
<tr><td>05</td><td>Scratches</td><td>Follow NO.3 OLED black spots, white spots, contamination</td><td></td></tr>
<tr><td>06</td><td>Chipped glass</td><td>Symbols Define:
x: Chip length y: Chip width z: Chip thickness
k: Seal width t: Glass thickness a: OLED side length
L: Electrode pad length:

6.1 General glass chip :
6.1.1 Chip on panel surface and crack between panels:
 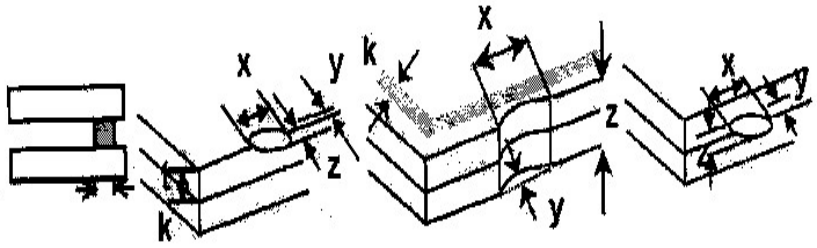

<table><tr><td>z: Chip thickness</td><td>y: Chip width</td><td>x: Chip length</td></tr><tr><td>Z≦1/2t</td><td>Not over viewing area</td><td>x≦1/8a</td></tr><tr><td>1/2t＜z≦2t</td><td>Not exceed 1/3k</td><td>x≦1/8a</td></tr></table>⊙If there are 2 or more chips, x is total length of each chip.

6.1.2 Corner crack:
 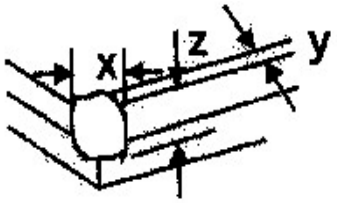

<table><tr><td>z: Chip thickness</td><td>y: Chip width</td><td>x: Chip length</td></tr><tr><td>Z≦1/2t</td><td>Not over viewing area</td><td>x≦1/8a</td></tr><tr><td>1/2t＜z≦2t</td><td>Not exceed 1/3k</td><td>x≦1/8a</td></tr></table>⊙If there are 2 or more chips, x is the total length of each chip.</td><td>2.5</td></tr>
</table>

For technical questions, contact: displays@vishay.com
THIS DOCUMENT IS SUBJECT TO CHANGE WITHOUT NOTICE. THE PRODUCTS DESCRIBED HEREIN AND THIS DOCUMENT ARE SUBJECT TO SPECIFIC DISCLAIMERS, SET FORTH AT www.vishay.com/doc?91000

<table>
<tr><th>NO</th><th>Item</th><th>Criterion</th><th>AQL</th></tr>
<tr><td>06</td><td>Glass crack</td><td>
Symbols :
x: Chip length y: Chip width z: Chip thickness
k: Seal width t: Glass thickness a: OLED side length
L: Electrode pad length
6.2 Protrusion over terminal :
6.2.1 Chip on electrode pad :
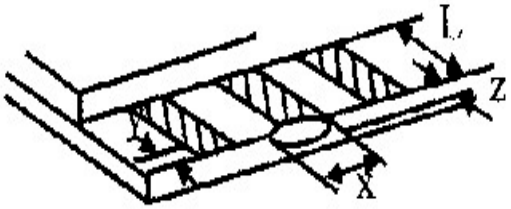
<table>
<tr><td>y: Chip width</td><td>x: Chip length</td><td>z: Chip thickness</td></tr>
<tr><td>y≦0.5mm</td><td>x≦1/8a</td><td>0 ＜ z ≦ t</td></tr>
</table>
6.2.2 Non-conductive portion:
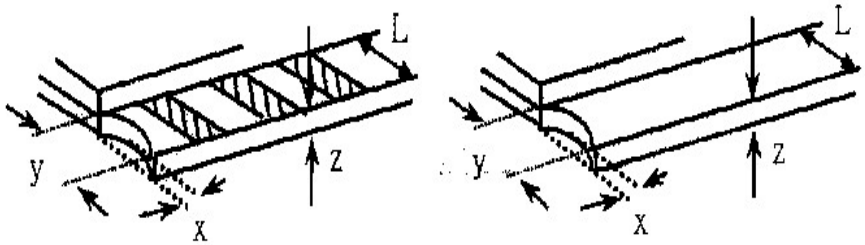
<table>
<tr><td>y: Chip width</td><td>x: Chip length</td><td>z: Chip thickness</td></tr>
<tr><td>y≦ L</td><td>x≦1/8a</td><td>0 ＜ z ≦ t</td></tr>
</table>
⊙If the chipped area touches the ITO terminal, over 2/3 of the ITO must remain and be inspected according to electrode terminal specifications.
⊙If the product will be heat sealed by the customer, the alignment mark not be damaged.
6.2.3 Substrate protuberance and internal crack.
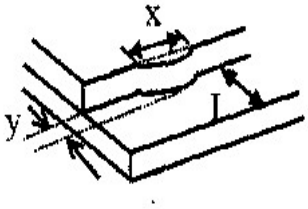
<table>
<tr><td>y: width</td><td>x: length</td></tr>
<tr><td>y≦1/3L</td><td>x ≦ a</td></tr>
</table>
</td><td>2.5</td></tr>
</table>

For technical questions, contact: displays@vishay.com
THIS DOCUMENT IS SUBJECT TO CHANGE WITHOUT NOTICE. THE PRODUCTS DESCRIBED HEREIN AND THIS DOCUMENT ARE SUBJECT TO SPECIFIC DISCLAIMERS, SET FORTH AT www.vishay.com/doc?91000

NO	Item	Criterion	AQL
07	Cracked glass	The OLED with extensive crack is not acceptable.	2.5
08	Backlight elements	8.1 Illumination source flickers when lit. 8.2 Spots or scratched that appear when lit must be judged. Using OLED spot, lines and contamination standards. 8.3 Backlight doesn't light or color wrong.	0.65 2.5 0.65
09	Bezel	9.1 Bezel may not have rust, be deformed or have fingerprints, stains or other contamination. 9.2 Bezel must comply with job specifications.	2.5 0.65
10	PCB、COB	10.1 COB seal may not have pinholes larger than 0.2mm or contamination. 10.2 COB seal surface may not have pinholes through to the IC. 10.3 The height of the COB should not exceed the height indicated in the assembly diagram. 10.4 There may not be more than 2mm of sealant outside the seal area on the PCB. And there should be no more than three places. 10.5 No oxidation or contamination PCB terminals. 10.6 Parts on PCB must be the same as on the production characteristic chart. There should be no wrong parts, missing parts or excess parts. 10.7 The jumper on the PCB should conform to the product characteristic chart. 10.8 If solder gets on bezel tab pads, OLED pad, zebra pad or screw hold pad, make sure it is smoothed down.	2.5 2.5 0.65 2.5 2.5 0.65 0.65 2.5
11	Soldering	11.1 No un-melted solder paste may be present on the PCB. 11.2 No cold solder joints, missing solder connections, oxidation or icicle. 11.3 No residue or solder balls on PCB. 11.4 No short circuits in components on PCB.	2.5 2.5 2.5 0.65

For technical questions, contact: displays@vishay.com
THIS DOCUMENT IS SUBJECT TO CHANGE WITHOUT NOTICE. THE PRODUCTS DESCRIBED HEREIN AND THIS DOCUMENT ARE SUBJECT TO SPECIFIC DISCLAIMERS, SET FORTH AT www.vishay.com/doc?91000

NO	Item	Criterion	AQL
12	General appearance	12.1 No oxidation, contamination, curves or, bends on interface Pin (OLB) of TCP. 12.2 No cracks on interface pin (OLB) of TCP. 12.3 No contamination, solder residue or solder balls on product. 12.4 The IC on the TCP may not be damaged, circuits. 12.5 The uppermost edge of the protective strip on the interface pin must be present or look as if it cause the interface pin to sever. 12.6 The residual rosin or tin oil of soldering (component or chip component) is not burned into brown or black color. 12.7 Sealant on top of the ITO circuit has not hardened. 12.8 Pin type must match type in specification sheet. 12.9 OLED pin loose or missing pins. 12.10 Product packaging must the same as specified on packaging specification sheet. 12.11 Product dimension and structure must conform to product specification sheet.	2.5 0.65 2.5 2.5 2.5 2.5 2.5 0.65 0.65 0.65 0.65

For technical questions, contact: displays@vishay.com
THIS DOCUMENT IS SUBJECT TO CHANGE WITHOUT NOTICE. THE PRODUCTS DESCRIBED HEREIN AND THIS DOCUMENT ARE SUBJECT TO SPECIFIC DISCLAIMERS, SET FORTH AT www.vishay.com/doc?91000

Check Item	Classification	Criteria
No Display	Major	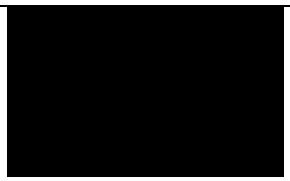
Missing Line	Major	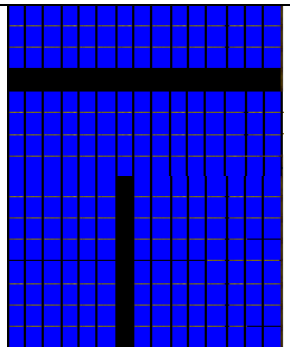
Pixel Short	Major	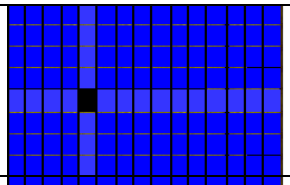
Darker Short	Major	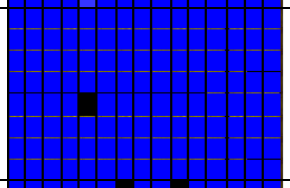
Wrong Display	Major	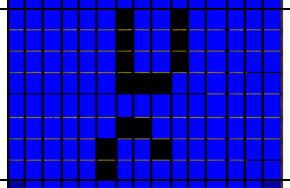
Un-uniform B/A x 100% < 70% A/C x 100% < 70%	Major	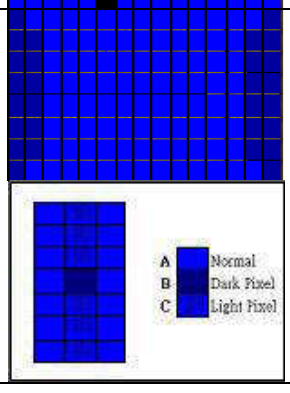

For technical questions, contact: displays@vishay.com
THIS DOCUMENT IS SUBJECT TO CHANGE WITHOUT NOTICE. THE PRODUCTS DESCRIBED HEREIN AND THIS DOCUMENT ARE SUBJECT TO SPECIFIC DISCLAIMERS, SET FORTH AT www.vishay.com/doc?91000

11.Precautions in use of OLED Modules

Modules

(1)Avoid applying excessive shocks to module or making any alterations or modifications to it.
(2)Don't make extra holes on the printed circuit board, modify its shape or change the components of OLED display module.
(3)Don't disassemble the OLED display module.
(4)Don't operate it above the absolute maximum rating.
(5)Don't drop, bend or twist OLED display module.
(6)Soldering: only to the I/O terminals.
(7)Storage: please storage in anti-static electricity container and clean environment.
(8)It's pretty common to use "Screen Saver" to extend the lifetime and Don't use fix information for long time in real application.
(9)Don't use fixed information in OLED panel for long time, that will extend "screen burn" effect time..
(10) Vishay has the right to change the passive components, including R2and R3 adjust resistors. (Resistors, capacitors and other passive components will have different appearance and color caused by the different supplier.)
(11) Vishay have the right to change the PCB Rev. (In order to satisfy the supplying stability, management optimization and the best product performance...etc, under the premise of not affecting the electrical characteristics and external dimensions, Vishay have the right to modify the version.)

11.1. Handling Precautions

(1) Since the display panel is being made of glass, do not apply mechanical impacts such us dropping from a high position.
(2) If the display panel is broken by some accident and the internal organic substance leaks out, be careful not to inhale nor lick the organic substance.
(3) If pressure is applied to the display surface or its neighborhood of the OLED display module, the cell structure may be damaged and be careful not to apply pressure to these sections.
(4) The polarizer covering the surface of the OLED display module is soft and easily scratched. Please be careful when handling the OLED display module.
(5) When the surface of the polarizer of the OLED display module has soil, clean the surface. It takes advantage of by using following adhesion tape.
* Scotch Mending Tape No. 810 or an equivalent
Never try to breathe upon the soiled surface nor wipe the surface using cloth containing solvent
such as ethyl alcohol, since the surface of the polarizer will become cloudy.
Also, pay attention that the following liquid and solvent may spoil the polarizer:
* Water
* Ketone
* Aromatic Solvents
(6) Hold OLED display module very carefully when placing OLED display module into the System housing. Do not apply excessive stress or pressure to OLED display module. And, do not over bend the film with electrode pattern layouts.
These stresses will influence the display performance. Also, secure sufficient rigidity for the outer cases.

For technical questions, contact: displays@vishay.com
THIS DOCUMENT IS SUBJECT TO CHANGE WITHOUT NOTICE. THE PRODUCTS DESCRIBED HEREIN AND THIS DOCUMENT ARE SUBJECT TO SPECIFIC DISCLAIMERS, SET FORTH AT www.vishay.com/doc?91000

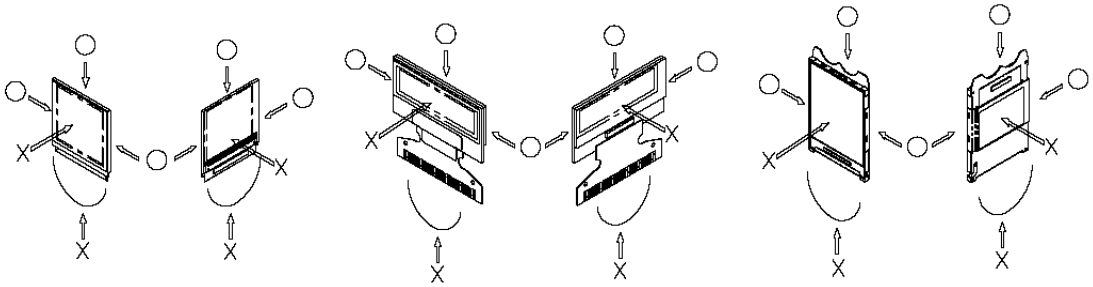

(7) Do not apply stress to the LSI chips and the surrounding molded sections.
(8) Do not disassemble nor modify the OLED display module.
(9) Do not apply input signals while the logic power is off.
(10) Pay sufficient attention to the working environments when handing OLED display modules to prevent occurrence of element breakage accidents by static electricity.
* Be sure to make human body grounding when handling OLED display modules.
* Be sure to ground tools to use or assembly such as soldering irons.
* To suppress generation of static electricity, avoid carrying out assembly work under dry environments.
* Protective film is being applied to the surface of the display panel of the OLED display module. Be careful since static electricity may be generated when exfoliating the protective film.
(11) Protection film is being applied to the surface of the display panel and removes the protection film before assembling it. At this time, if the OLED display module has been stored for a long period of time, residue adhesive material of the protection film may remain on the surface of the display panel after removed of the film. In such case, remove the residue material by the method introduced in the above Section 5.
(12) If electric current is applied when the OLED display module is being dewed or when it is placed under high humidity environments, the electrodes may be corroded and be careful to avoid the above.

11.2. Storage Precautions

(1) When storing OLED display modules, put them in static electricity preventive bags avoiding exposure to direct sun light nor to lights of fluorescent lamps. and, also, avoiding high temperature and high humidity environment or low temperature (less than 0°C) environments.
(We recommend you to store these modules in the packaged state when they were shipped from Vishay.
At that time, be careful not to let water drops adhere to the packages or bags nor let dewing occur with them.
(2) If electric current is applied when water drops are adhering to the surface of the OLED display module, when the OLED display module is being dewed or when it is placed under high humidity environments, the electrodes may be corroded and be careful about the above.

11.3. Designing Precautions

(1) The absolute maximum ratings are the ratings which cannot be exceeded for OLED display module, and if these values are exceeded, panel damage may be happen.
(2) To prevent occurrence of malfunctioning by noise, pay attention to satisfy the VIL and VIH specifications and, at the same time, to make the signal line cable as short as possible.
(3) We recommend you to install excess current preventive unit (fuses, etc.) to the power circuit (VDD). (Recommend value: 0.5A)
(4) Pay sufficient attention to avoid occurrence of mutual noise interference with the neighboring devices.
(5) As for EMI, take necessary measures on the equipment side basically.

For technical questions, contact: displays@vishay.com
THIS DOCUMENT IS SUBJECT TO CHANGE WITHOUT NOTICE. THE PRODUCTS DESCRIBED HEREIN AND THIS DOCUMENT ARE SUBJECT TO SPECIFIC DISCLAIMERS, SET FORTH AT www.vishay.com/doc?91000

(6) When fastening the OLED display module, fasten the external plastic housing section.
(7) If power supply to the OLED display module is forcibly shut down by such errors as taking out the main battery while the OLED display panel is in operation, we cannot guarantee the quality of this OLED display module.
* Connection (contact) to any other potential than the above may lead to rupture of the IC.

11.4. Precautions when disposing of the OLED display modules

1) Request the qualified companies to handle industrial wastes when disposing of the OLED display modules. Or, when burning them, be sure to observe the environmental and hygienic laws and regulations.

11.5. Other Precautions

(1) When an OLED display module is operated for a long of time with fixed pattern may remain as an after image or slight contrast deviation may occur.
Nonetheless, if the operation is interrupted and left unused for a while, normal state can be restored. Also, there will be no problem in the reliability of the module.
(2) To protect OLED display modules from performance drops by static electricity rapture, etc., do not touch the following sections whenever possible while handling the OLED display modules.
* Pins and electrodes
* Pattern layouts such as the TCP & FPC
(3) With this OLED display module, the OLED driver is being exposed. Generally speaking, semiconductor elements change their characteristics when light is radiated according to the principle of the solar battery. Consequently, if this OLED driver is exposed to light, malfunctioning may occur.
* Design the product and installation method so that the OLED driver may be shielded from light in actual usage.
* Design the product and installation method so that the OLED driver may be shielded from light during the inspection processes.
(4) Although this OLED display module stores the operation state data by the commands and the indication data, when excessive external noise, etc. enters into the module, the internal status may be changed. It therefore is necessary to take appropriate measures to suppress noise generation or to protect from influences of noise on the system design.
(5) We recommend you to construct its software to make periodical refreshment of the operation statuses (re-setting of the commands and re-transference of the display data) to cope with catastrophic noise.
(6)Resistors, capacitors and other passive components will have different appearance and color caused by the different supplier.
(7)Our company will has the right to upgrade and modify the product function.

THIS DOCUMENT IS SUBJECT TO CHANGE WITHOUT NOTICE. THE PRODUCTS DESCRIBED HEREIN AND THIS DOCUMENT ARE SUBJECT TO SPECIFIC DISCLAIMERS, SET FORTH AT www.vishay.com/doc?91000

Disclaimer

ALL PRODUCT, PRODUCT SPECIFICATIONS AND DATA ARE SUBJECT TO CHANGE WITHOUT NOTICE TO IMPROVE RELIABILITY, FUNCTION OR DESIGN OR OTHERWISE.

Vishay Intertechnology, Inc., its affiliates, agents, and employees, and all persons acting on its or their behalf (collectively, “Vishay”), disclaim any and all liability for any errors, inaccuracies or incompleteness contained in any datasheet or in any other disclosure relating to any product.

Vishay makes no warranty, representation or guarantee regarding the suitability of the products for any particular purpose or the continuing production of any product. To the maximum extent permitted by applicable law, Vishay disclaims (i) any and all liability arising out of the application or use of any product, (ii) any and all liability, including without limitation special, consequential or incidental damages, and (iii) any and all implied warranties, including warranties of fitness for particular purpose, non-infringement and merchantability.

Statements regarding the suitability of products for certain types of applications are based on Vishay's knowledge of typical requirements that are often placed on Vishay products in generic applications. Such statements are not binding statements about the suitability of products for a particular application. It is the customer's responsibility to validate that a particular product with the properties described in the product specification is suitable for use in a particular application. Parameters provided in datasheets and / or specifications may vary in different applications and performance may vary over time. All operating parameters, including typical parameters, must be validated for each customer application by the customer's technical experts. Product specifications do not expand or otherwise modify Vishay's terms and conditions of purchase, including but not limited to the warranty expressed therein.

Hyperlinks included in this datasheet may direct users to third-party websites. These links are provided as a convenience and for informational purposes only. Inclusion of these hyperlinks does not constitute an endorsement or an approval by Vishay of any of the products, services or opinions of the corporation, organization or individual associated with the third-party website. Vishay disclaims any and all liability and bears no responsibility for the accuracy, legality or content of the third-party website or for that of subsequent links.

Except as expressly indicated in writing, Vishay products are not designed for use in medical, life-saving, or life-sustaining applications or for any other application in which the failure of the Vishay product could result in personal injury or death. Customers using or selling Vishay products not expressly indicated for use in such applications do so at their own risk. Please contact authorized Vishay personnel to obtain written terms and conditions regarding products designed for such applications.

No license, express or implied, by estoppel or otherwise, to any intellectual property rights is granted by this document or by any conduct of Vishay. Product names and markings noted herein may be trademarks of their respective owners.

© 2024 VISHAY INTERTECHNOLOGY, INC. ALL RIGHTS RESERVED