# Heatsink Encased Wirewound Power Resistors

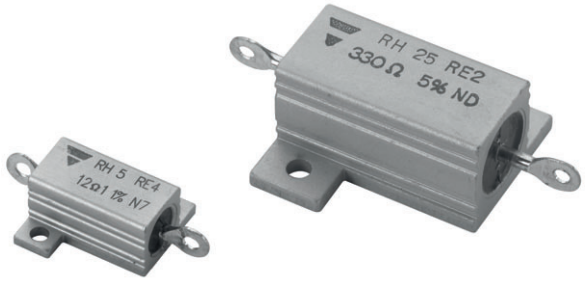


## FEATURES

- 5 W to 50 W at 25 °C
- NF C 83-210
- According to CECC 40 203
- High stability < 0.05 % year
- Low temperature coefficient typically ± 15 ppm/°C
- Wide range of values from 0.006 Ω to 130 kΩ
- Termination = Sn/Ag/Cu
- Material categorization: for definitions of compliance please see www.vishay.com/doc?99912

Pb-free

RoHS COMPLIANT

Encased in a compact and light heatsink offering complete environmental protection, great mechanical strength and easy mounting. Non inductive versions can be supplied under the RHNI designation (please indicate required specifications and frequency range upon ordering).

NF F 16101, 10/1988 and 16102, 04/1992: Not applicable (our parts contain less than 10 g of combustible materials).

## DIMENSIONS in millimeters

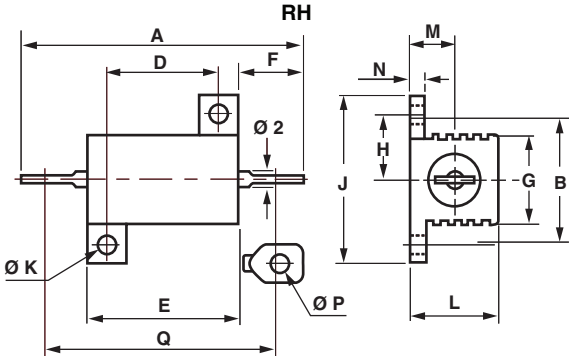


| SERIES | A | B ± 0.2 | D ± 0.2 | E ± 0.5 | F | G ± 1 | H ± 0.7 | J ± 0.5 | Ø K ± 0.1 | L MAX. | M ± 0.5 | N ± 0.3 | Ø P MIN. | Q | WEIGHT g |
|---|---|---|---|---|---|---|---|---|---|---|---|---|---|---|---|
| RH5 | 28.5 ± 1.5 | 12.5 | 11.3 | 16.3 | 6.8 ± 1.5 | 8.5 | 6.2 | 16.4 | 2.4 | 8.9 | 4.3 | 1.6 | 2.1 | 25.3 ± 1.5 | 4 |
| RH10 | 35.5 ± 1.5 | 15.9 | 14 | 19 | 7.9 ± 1.5 | 11 | 7.9 | 20.6 | 2.4 | 11 | 5.6 | 2 | 2.1 | 30.6 ± 1.5 | 6.4 |
| RH25 | 49 ± 1.3 | 19.8 | 18.3 | 28 | 11.1 ± 1.5 | 14 | 9.9 | 27.5 | 3.2 | 15 | 8 | 2.4 | 2.1 | 44.6 ± 1.3 | 16.1 |
| RH50 | 70.2 ± 1.4 | 21.4 | 39.7 | 50 | 11 ± 1.2 | 14 | 10.7 | 29.4 | 3.2 | 15 | 8 | 2.4 | 2.1 | 66.5 ± 1.4 | 28.6 |

## OHMIC RANGE IN RELATION TO TOLERANCE

| | | RH5 | RH10 | RH25 | RH50 |
|---|---|---|---|---|---|
| 10 % | E24 | 0.01 Ω to 12 kΩ | 0.006 Ω to 20 kΩ | 0.006 Ω to 62 kΩ | 0.006 Ω to 130 kΩ |
| 5 % | E24 | 0.01 Ω to 12 kΩ | 0.01 Ω to 20 kΩ | 0.01 Ω to 62 kΩ | 0.01 Ω to 130 kΩ |
| 2 % | E48 | 0.01 Ω to 12 kΩ | 0.01 Ω to 20 kΩ | 0.01 Ω to 62 kΩ | 0.01 Ω to 130 kΩ |
| 1 % | E96 | 0.1 Ω to 12 kΩ | 0.1 Ω to 20 kΩ | 0.05 Ω to 62 kΩ | 0.05 Ω to 130 kΩ |
| 0.5 % | E96 | 0.1 Ω to 12 kΩ | 0.1 Ω to 20 kΩ | 0.1 Ω to 62 kΩ | 0.1 Ω to 130 kΩ |

## STANDARD ELECTRICAL SPECIFICATIONS

| MODEL | RATED POWER $P_{25\,°C}$ W | VOLTAGE LIMIT $V_{RMS}$ | TOLERANCE ± % | RESISTANCE RANGE Ω | TEMPERATURE COEFFICIENT ± ppm/°C |
|---|---|---|---|---|---|
| RH5 | 10 | 160 | 2, 5, 10 | 0.01 to 12K | < 5 Ω ± 100, 5 Ω to 10 Ω ± 50, > 10 Ω ± 25 |
| | 10 | | 0.5, 1 | 0.1 to 12K | |
| RH10 | 12.5 | 250 | 10 | 0.006 to 20K | |
| | 12.5 | | 2, 5 | 0.01 to 20K | |
| | 12.5 | | 0.5, 1 | 0.1 to 20K | |
| RH25 | 25 | 550 | 10 | 0.006 to 62K | |
| | 25 | | 2, 5 | 0.01 to 62K | |
| | 25 | | 1 | 0.05 to 62K | |
| | 25 | | 0.5 | 0.1 to 62K | |
| RH50 | 50 | 1285 | 10 | 0.006 to 130K | |
| | 50 | | 2, 5 | 0.01 to 130K | |
| | 50 | | 1 | 0.05 to 130K | |
| | 50 | | 0.5 | 0.1 to 130K | |

## TECHNICAL SPECIFICATIONS

| VISHAY SFERNICE MODEL AND STYLE | | | RH5 | RH10 | RH25 | RH50 |
|---|---|---|---|---|---|---|
| Power Rating Chassis Mounted Resistors | MIL Limits | 25 °C | 5 W | 10 W | 20 W | 30 W |
| | | 70 °C | 4 W | 8 W | 16 W | 24 W |
| 413 cm² for RH5 and RH10<br>536 cm² for RH25 and RH50 | Vishay Sfernice Limits | 25 °C | 10 W | 12.5 W | 25 W | 50 W |
| | | 70 °C | 8 W | 10 W | 20 W | 40 W |
| Unmounted Resistors | Vishay Sfernice Limits | 25 °C | 4 W | 6 W | 9 W | 12 W |
| | | 70 °C | 3.2 W | 4.8 W | 7.2 W | 9.6 W |
| Rated Maximum Voltage ($V_{RMS}$) | | | 160 V | 250 V | 550 V | 1285 V |
| Dielectric Strength $V_{RMS}$ | | | 1000 V | 1500 V | 2500 V | 2500 V |

## PERFORMANCE

| MIL-R-18546 D / NF C 83-210 | | | | | TYPICAL DRIFTS |
|---|---|---|---|---|---|
| TESTS | CONDITIONS | | | REQUIREMENTS | |
| Operating Temperature Range | -55 °C +200 °C | | | - | - |
| Momentary Overload | 5 $P_r$/5 s | | | ± (0.25 % + 0.05 Ω) | ± (0.1 % + 0.05 Ω) |
| Climatic Sequence | -55 °C +200 °C<br>5 cycles | | | ± (0.25 % + 0.05 Ω) | ± (0.1 % + 0.05 Ω) |
| Load Life Test at High Temperature | 2 h at +275 °C | | | ± (1 % + 0.05 Ω)<br>Ins. resistance ≥ 1 GΩ | ± (0.1 % + 0.05 Ω) |
| Humidity (Steady State) | 56 days | | | ± (1 % + 0.05)<br>Ins. resistance ≥ 100 MΩ | ± (0.5 % + 0.05 Ω) |
| Resistance to Moisture | Climatic sequences test, with load and polarisation | | | ± (1 % + 0.05 Ω) | ± (0.5 % + 0.05 Ω) |
| Temperature Coefficient | 5 Ω to 10 Ω<br>> 10 Ω | | | ± 50 ppm/°C<br>± 25 ppm/°C | ± 15 ppm/°C |
| Load Life at Maximum Temperature | 1000 h 25 °C | $P_n$MIL | Vishay | ± (1 % + 0.05 Ω) | ± (0.1 % + 0.05 Ω) |
| | 200 °C | 30 % of $P_n$ | Sfernice | Ins. resistance ≥ 1 GΩ | ± (0.5 % + 0.05 Ω) |

## MOMENTARY OVERLOAD

**1. Momentary overload (> 2 s):**
See example in table below. In all cases, it should be understood that:
- The 12 $P_n$ overload applies only to ohmic values 0.1.
- The overload voltage shall not be higher than that used for the dielectric strength test (see Standard Electrical Specifications).

**2. Short time overload (< 2 s):**
For times shorter than 2 s, higher overloads can be sustained in some cases. Consult Vishay Sfernice.

| POWER LOADING | DURATION |
|---|---|
| 2.5 $P_n$ | 10 s |
| 5 $P_n$ | 5 s |
| 12 $P_n$ | 2 s |

## POWER RATING

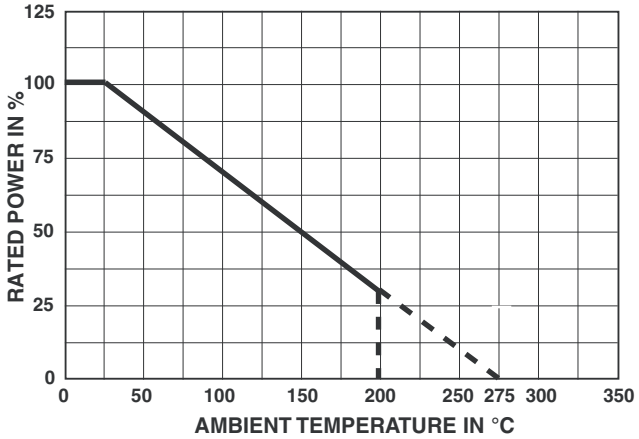


## TEMPERATURE RISE

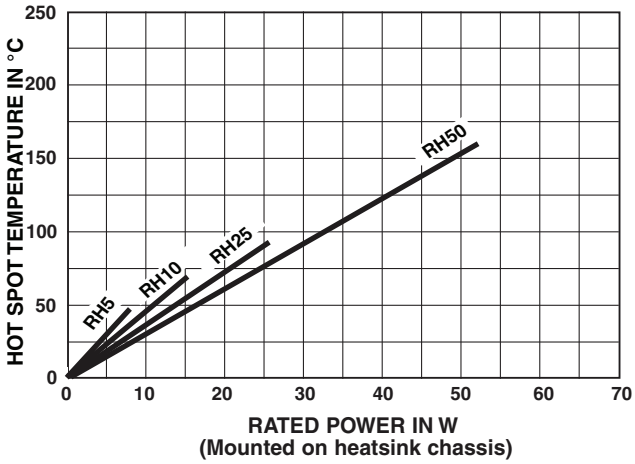


## MARKING

Vishay Sfernice trademark, model, style, nominal resistance (in Ω), tolerance (in %), manufacturing date.

## PACKAGING

Bag of 10 units

## ORDERING INFORMATION

| RH | 05 | N | 18R00 | J | S03 |
|---|---|---|---|---|---|
| MODEL | STYLE | NON INDUCTIVE WINDING Optional | OHMIC VALUE | TOLERANCE | PACKAGING |

## GLOBAL PART NUMBER INFORMATION

R H 5 0 3 3 0 0 1 J S 0 3

| GLOBAL MODEL | SIZE | OPTION | OHMIC VALUE | TOLERANCE | PACKAGING | SPECIAL |
|---|---|---|---|---|---|---|
| **RH** | **05**<br>**10**<br>**25**<br>**50** | **N** = Non inductive winding | The first four digits are significant figures and the last digit specifies the number of zeros to follow. R designates decimal point.<br>**33001** = 33 kΩ<br>**680R0** = 680 Ω<br>**20301** = 20.3 kΩ<br>**88R88** = 88.88 Ω<br>... | **D** = 0.5 %<br>**F** = 1 %<br>**G** = 2 %<br>**J** = 5 %<br>**K** = 10 % | **Standard Packaging:**<br>S03 = Bag, 10 pieces | As applicable<br>**Ex** = HDX |

| RELATED DOCUMENTS | |
|---|---|
| **APPLICATION NOTES** | |
| Potentiometers and Trimmers | www.vishay.com/doc?51001 |
| Guidelines for Vishay Sfernice Resistive and Inductive Components | www.vishay.com/doc?52029 |

# Disclaimer

ALL PRODUCT, PRODUCT SPECIFICATIONS AND DATA ARE SUBJECT TO CHANGE WITHOUT NOTICE TO IMPROVE RELIABILITY, FUNCTION OR DESIGN OR OTHERWISE.

Vishay Intertechnology, Inc., its affiliates, agents, and employees, and all persons acting on its or their behalf (collectively, “Vishay”), disclaim any and all liability for any errors, inaccuracies or incompleteness contained in any datasheet or in any other disclosure relating to any product.

Vishay makes no warranty, representation or guarantee regarding the suitability of the products for any particular purpose or the continuing production of any product. To the maximum extent permitted by applicable law, Vishay disclaims (i) any and all liability arising out of the application or use of any product, (ii) any and all liability, including without limitation special, consequential or incidental damages, and (iii) any and all implied warranties, including warranties of fitness for particular purpose, non-infringement and merchantability.

Statements regarding the suitability of products for certain types of applications are based on Vishay's knowledge of typical requirements that are often placed on Vishay products in generic applications. Such statements are not binding statements about the suitability of products for a particular application. It is the customer's responsibility to validate that a particular product with the properties described in the product specification is suitable for use in a particular application. Parameters provided in datasheets and / or specifications may vary in different applications and performance may vary over time. All operating parameters, including typical parameters, must be validated for each customer application by the customer's technical experts. Product specifications do not expand or otherwise modify Vishay's terms and conditions of purchase, including but not limited to the warranty expressed therein.

Hyperlinks included in this datasheet may direct users to third-party websites. These links are provided as a convenience and for informational purposes only. Inclusion of these hyperlinks does not constitute an endorsement or an approval by Vishay of any of the products, services or opinions of the corporation, organization or individual associated with the third-party website. Vishay disclaims any and all liability and bears no responsibility for the accuracy, legality or content of the third-party website or for that of subsequent links.

Except as expressly indicated in writing, Vishay products are not designed for use in medical, life-saving, or life-sustaining applications or for any other application in which the failure of the Vishay product could result in personal injury or death. Customers using or selling Vishay products not expressly indicated for use in such applications do so at their own risk. Please contact authorized Vishay personnel to obtain written terms and conditions regarding products designed for such applications.

No license, express or implied, by estoppel or otherwise, to any intellectual property rights is granted by this document or by any conduct of Vishay. Product names and markings noted herein may be trademarks of their respective owners.