Silicon NPN Phototransistor, RoHS Compliant

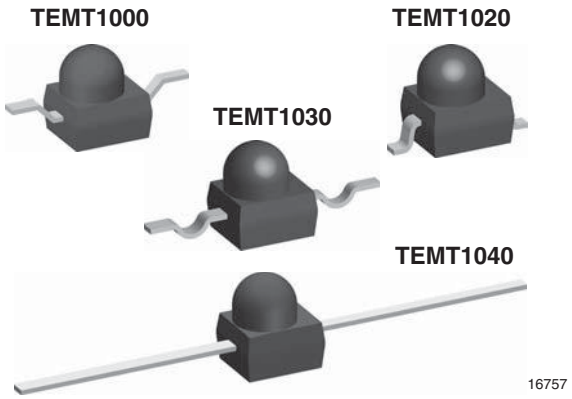

FEATURES

- Package type: surface mount
- Package form: GW, RGW, yoke, axial
- Dimensions (L x W x H in mm): 2.5 x 2 x 2.7
- High radiant sensitivity
- Daylight blocking filter matched with 870 nm to 950 nm IR emitters
- Fast response times
- Angle of half sensitivity: $\varphi = \pm 15°$
- Package matches with IR emitter series TSML1000
- Floor life: 168 h, MSL 3, acc. J-STD-020
- Compliant to RoHS Directive 2002/95/EC and in accordance with WEEE 2002/96/EC

Pb-free
e3
RoHS COMPLIANT

DESCRIPTION

TEMT1000 series are silicon NPN phototransistors with high radiant sensitivity in black, surface mount, plastic packages with lens and daylight blocking filter. Filter bandwidth is matched with 870 nm to 950 nm IR emitters.

APPLICATIONS

- Detector in electronic control and drive circuits
- IR detector for daylight application
- Photo interrupters
- Counter
- Encoder

PRODUCT SUMMARY

COMPONENT	I_{ca} (mA)	φ (deg)	$\lambda_{0.5}$ (nm)
TEMT1000	7	± 15	730 to 1000
TEMT1020	7	± 15	730 to 1000
TEMT1030	7	± 15	730 to 1000
TEMT1040	7	± 15	730 to 1000

Note
- Test conditions see table “Basic Characteristics”

ORDERING INFORMATION

ORDERING CODE	PACKAGING	REMARKS	PACKAGE FORM
TEMT1000	Tape and reel	MOQ: 1000 pcs, 1000 pcs/reel	Reverse gullwing
TEMT1020	Tape and reel	MOQ: 1000 pcs, 1000 pcs/reel	Gullwing
TEMT1030	Tape and reel	MOQ: 1000 pcs, 1000 pcs/reel	Yoke
TEMT1040	Bulk	MOQ: 1000 pcs, 1000 pcs/bulk	Axial leads

Note
- MOQ: minimum order quantity

ABSOLUTE MAXIMUM RATINGS (T_{amb} = 25 °C, unless otherwise specified)

PARAMETER	TEST CONDITION	SYMBOL	VALUE	UNIT
Emitter collector voltage		V_{ECO}	5	V
Collector current		I_C	50	mA
Collector peak current	$t_p/T = 0.5$, $t_p \leq 10$ ms	I_{CM}	100	mA
Power dissipation	$T_{amb} \leq 55$ °C	P_V	100	mW
Junction temperature		T_j	100	°C
Operating temperature range		T_{amb}	- 40 to + 85	°C
Storage temperature range		T_{stg}	- 40 to + 100	°C
Soldering temperature	$t \leq 5$ s	T_{sd}	260	°C
Thermal resistance junction/ambient	Soldered on PCB with pad dimensions: 4 mm x 4 mm	R_{thJA}	400	K/W

For technical questions, contact: detectortechsupport@vishay.com
THIS DOCUMENT IS SUBJECT TO CHANGE WITHOUT NOTICE. THE PRODUCTS DESCRIBED HEREIN AND THIS DOCUMENT ARE SUBJECT TO SPECIFIC DISCLAIMERS, SET FORTH AT www.vishay.com/doc?91000

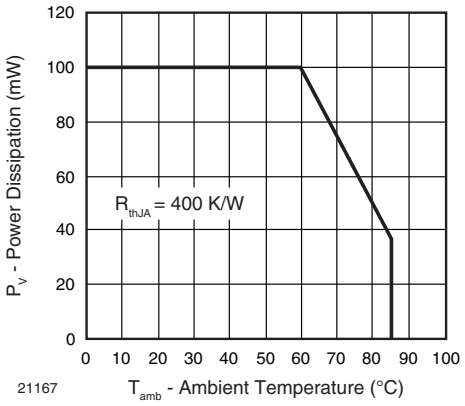

Fig. 1 - Power Dissipation Limit vs. Ambient Temperature

BASIC CHARACTERISTICS (T_{amb} = 25 °C, unless otherwise specified)						
PARAMETER	**TEST CONDITION**	**SYMBOL**	**MIN.**	**TYP.**	**MAX.**	**UNIT**
Collector emitter voltage	I_C = 1 mA	V_{CEO}	70			V
Collector emitter dark current	V_{CE} = 20 V, E = 0	I_{CEO}		1	200	nA
Collector emitter capacitance	V_{CE} = 5 V, f = 1 MHz, E = 0	C_{CEO}		3		pF
Angle of half sensitivity		φ		± 15		deg
Wavelength of peak sensitivity		λ_p		880		nm
Range of spectral bandwidth		$\lambda_{0.5}$		730 to 1000		nm
Collector emitter saturation voltage	E_e = 1 mW/cm², λ = 950 nm, I_C = 0.1 mA	V_{CEsat}			0.3	V
Turn-on time	V_S = 5 V, I_C = 5 mA, R_L = 100 Ω	t_{on}		2.0		µs
Turn-off time	V_S = 5 V, I_C = 5 mA, R_L = 100 Ω	t_{off}		2.3		µs
Cut-off frequency	V_S = 5 V, I_C = 5 mA, R_L = 100 Ω	f_c		180		kHz
Collector light current	E_e = 1 mW/cm², λ = 950 nm, V_{CE} = 5 V	I_{ca}	2	7.0		mA

BASIC CHARACTERISTICS (T_{amb} = 25 °C, unless otherwise specified)

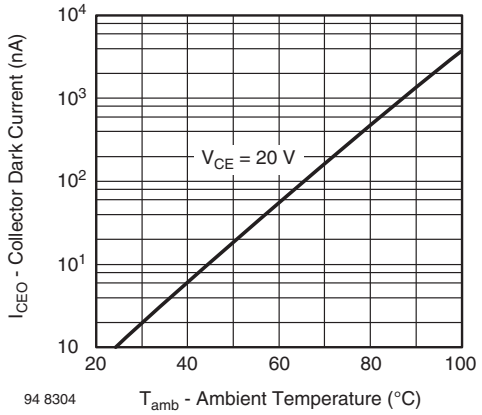

Fig. 2 - Collector Dark Current vs. Ambient Temperature

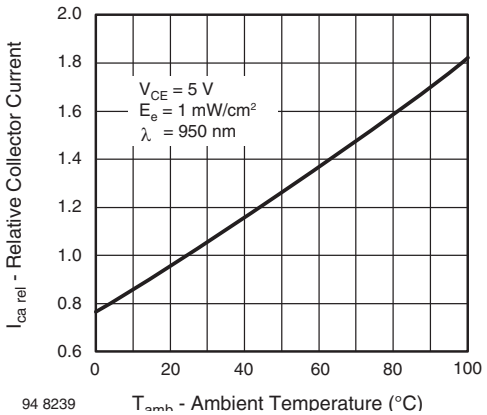

Fig. 3 - Relative Collector Current vs. Ambient Temperature

For technical questions, contact: detectortechsupport@vishay.com
THIS DOCUMENT IS SUBJECT TO CHANGE WITHOUT NOTICE. THE PRODUCTS DESCRIBED HEREIN AND THIS DOCUMENT ARE SUBJECT TO SPECIFIC DISCLAIMERS, SET FORTH AT www.vishay.com/doc?91000

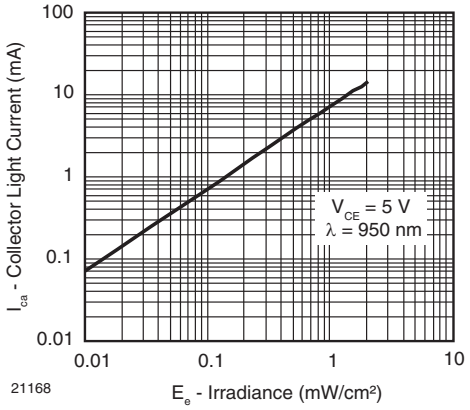

Fig. 4 - Collector Light Current vs. Irradiance

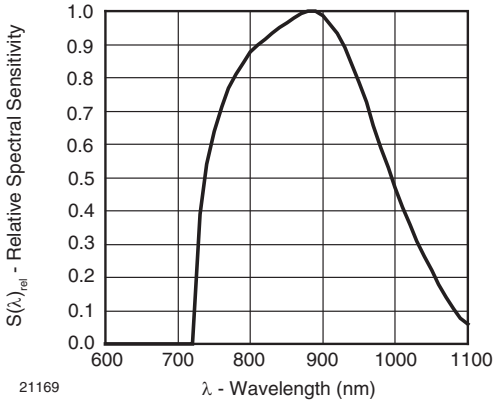

Fig. 7 - Relative Spectral Sensitivity vs. Wavelength

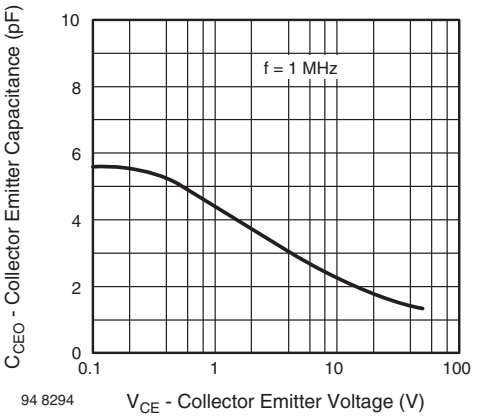

Fig. 5 - Collector Emitter Capacitance vs. Collector Emitter Voltage

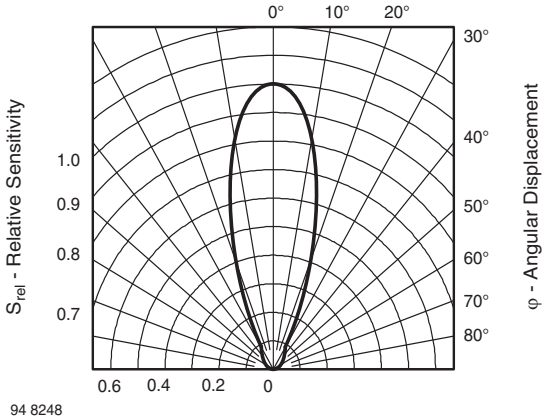

Fig. 8 - Relative Radiant Sensitivity vs. Angular Displacement

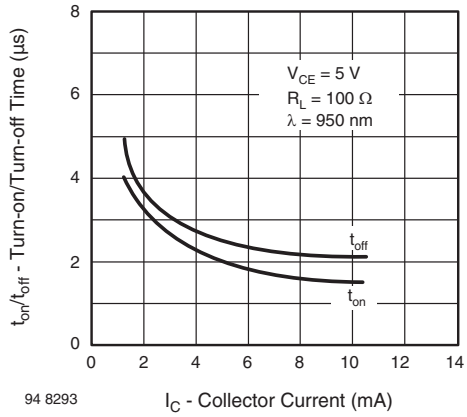

Fig. 6 - Turn-on/Turn-off Time vs. Collector Current

For technical questions, contact: detectortechsupport@vishay.com
THIS DOCUMENT IS SUBJECT TO CHANGE WITHOUT NOTICE. THE PRODUCTS DESCRIBED HEREIN AND THIS DOCUMENT ARE SUBJECT TO SPECIFIC DISCLAIMERS, SET FORTH AT www.vishay.com/doc?91000

PRECAUTIONS FOR USE

1. Over-current-proof

Customer must apply resistors for protection, otherwise slight voltage shift will cause big current change (burn out will happen).

2. Storage

- Storage temperature and rel. humidity conditions are: 5 °C to 35 °C, R.H. 60 %.
- Floor life must not exceed 168 h, acc. to JEDEC level 3, J-STD-020.
  Once the package is opened, the products should be used within a week. Otherwise, they should be kept in a damp proof box with desiccant.
  Considering tape life, we suggest to use products within one year from production date.
- If opened more than one week in an atmosphere 5 °C to 35 °C, R.H. 60 %, devices should be treated at 60 °C ± 5 °C for 15 h.
- If humidity indicator in the package shows pink color (normal blue), then devices should be treated with the same conditions as 2.3.

REFLOW SOLDER PROFILE

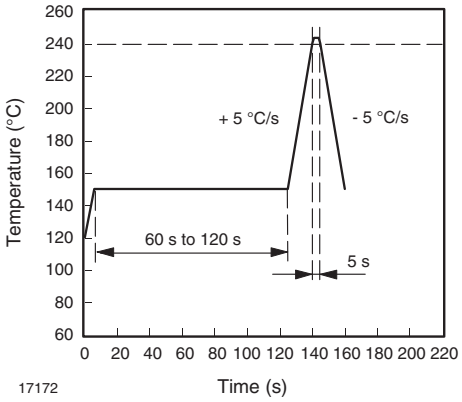

Fig. 9 - Lead Tin (SnPb) Reflow Solder Profile

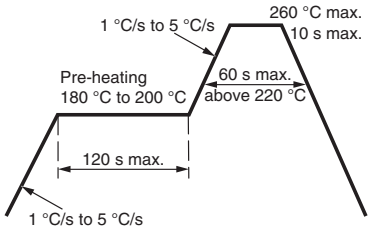

Fig. 10 - Lead (Pb)-Free Reflow Solder Profile acc. J-STD-020

PACKAGE DIMENSIONS in millimeters: TEMT1000

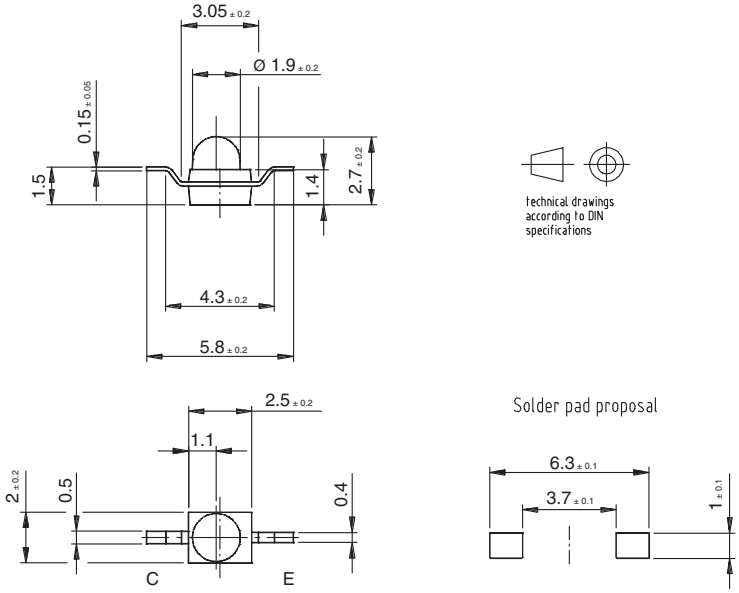

For technical questions, contact: detectortechsupport@vishay.com
THIS DOCUMENT IS SUBJECT TO CHANGE WITHOUT NOTICE. THE PRODUCTS DESCRIBED HEREIN AND THIS DOCUMENT ARE SUBJECT TO SPECIFIC DISCLAIMERS, SET FORTH AT www.vishay.com/doc?91000

PACKAGE DIMENSIONS in millimeters: **TEMT1020**

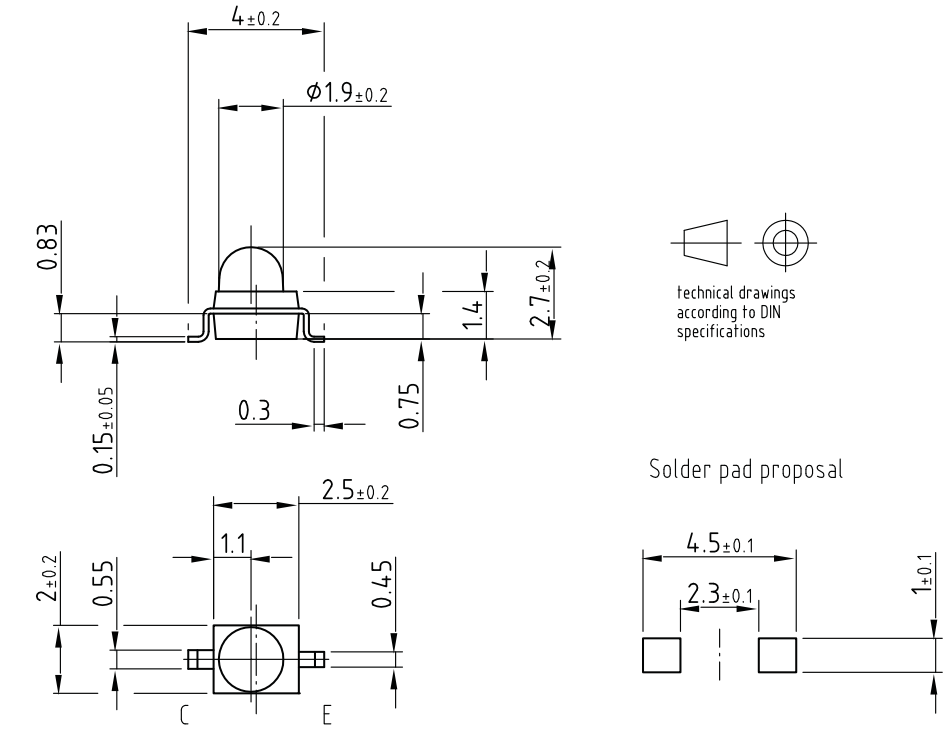

Drawing-No.: 6.544-5325.01-4
Issue: 5; 19.01.06
16105

PACKAGE DIMENSIONS in millimeters: **TEMT1030**

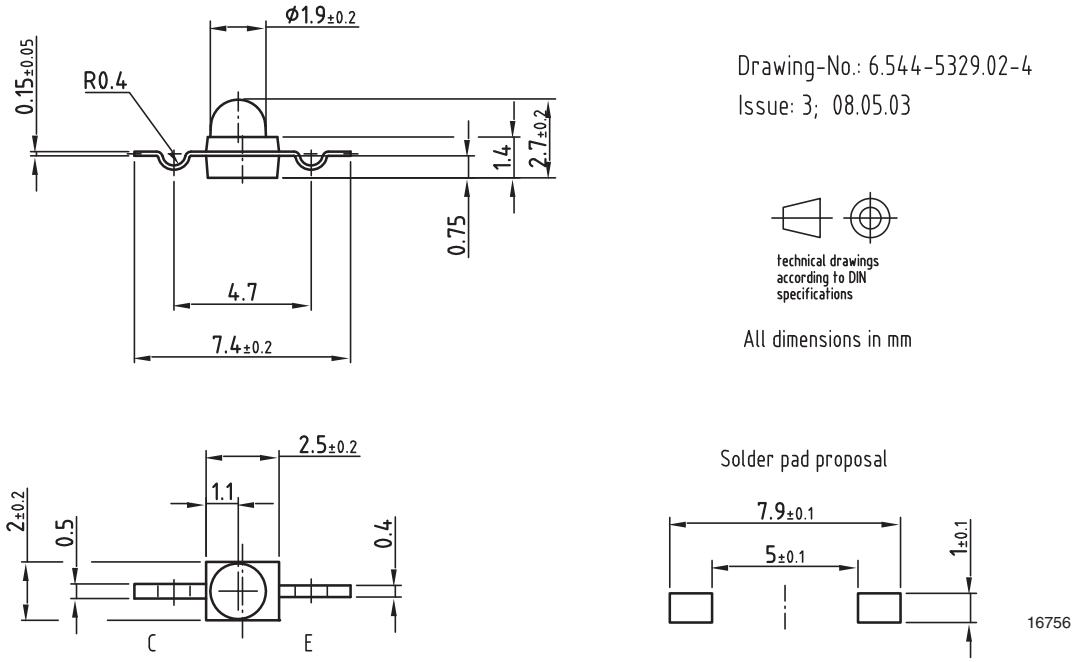

Drawing-No.: 6.544-5329.02-4
Issue: 3; 08.05.03

All dimensions in mm

For technical questions, contact: detectortechsupport@vishay.com
THIS DOCUMENT IS SUBJECT TO CHANGE WITHOUT NOTICE. THE PRODUCTS DESCRIBED HEREIN AND THIS DOCUMENT ARE SUBJECT TO SPECIFIC DISCLAIMERS, SET FORTH AT www.vishay.com/doc?91000

PACKAGE DIMENSIONS in millimeters: **TEMT1040**

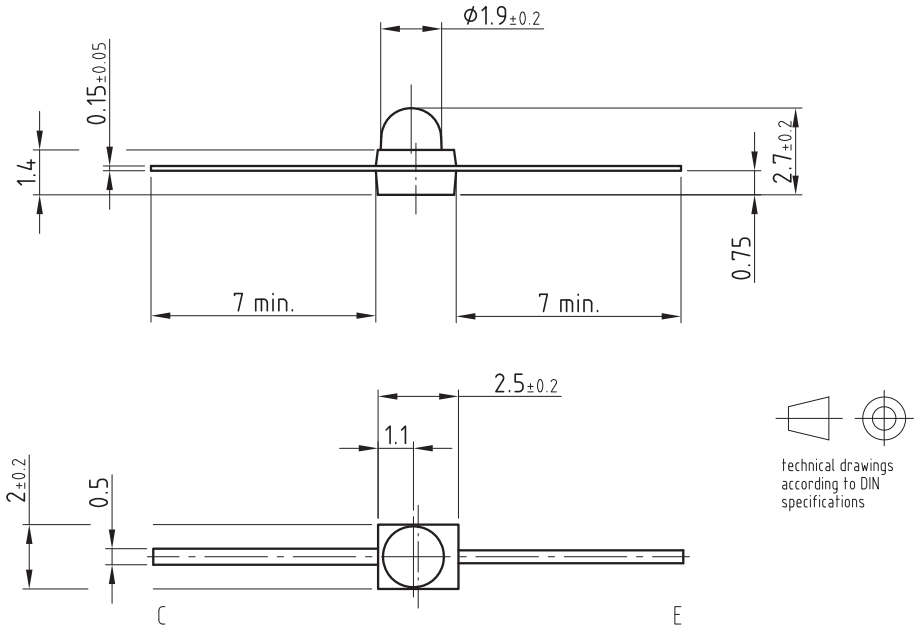

REEL DIMENSIONS in millimeters

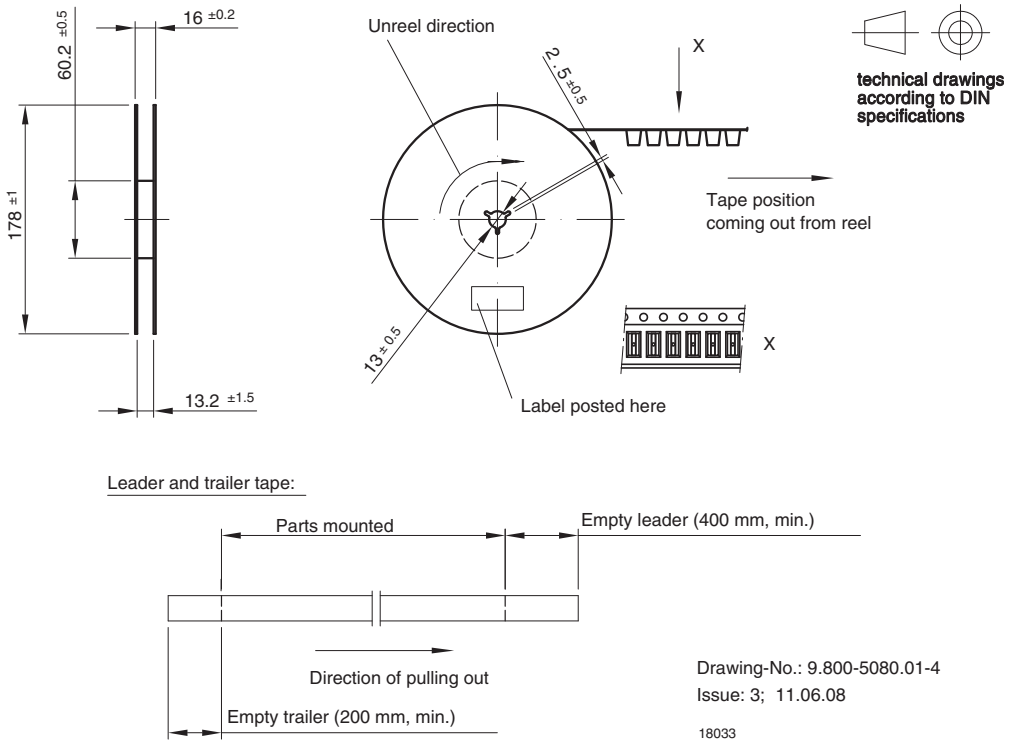

For technical questions, contact: detectortechsupport@vishay.com
THIS DOCUMENT IS SUBJECT TO CHANGE WITHOUT NOTICE. THE PRODUCTS DESCRIBED HEREIN AND THIS DOCUMENT ARE SUBJECT TO SPECIFIC DISCLAIMERS, SET FORTH AT www.vishay.com/doc?91000

TAPING DIMENSIONS in millimeters: **TEMT1000**

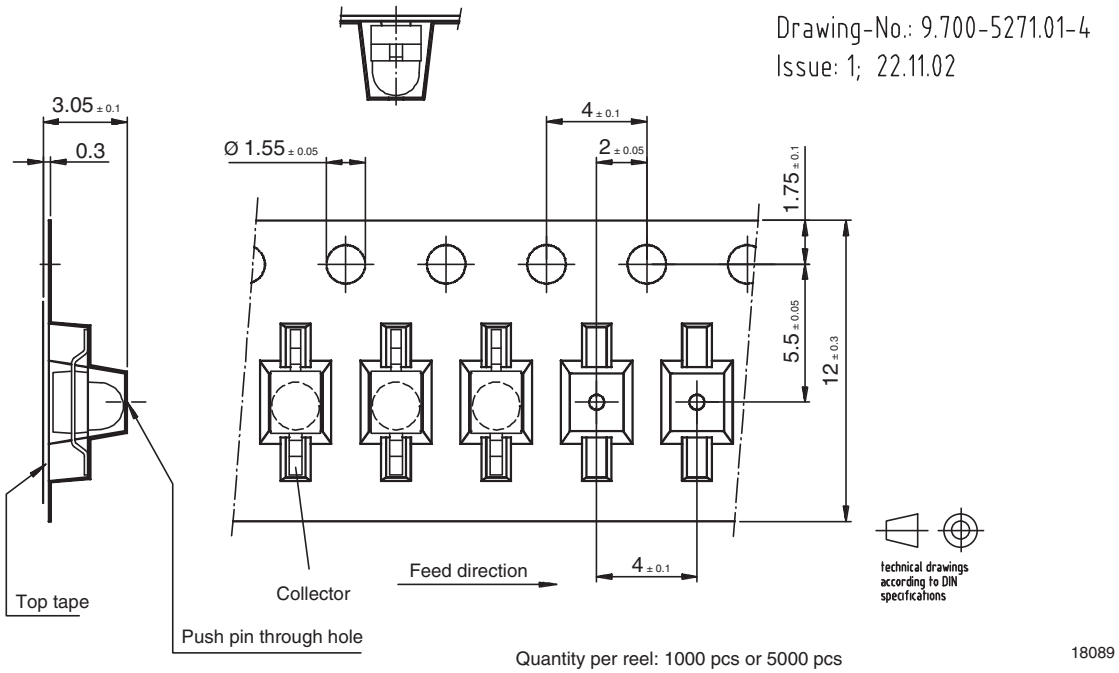

TAPING DIMENSIONS in millimeters: **TEMT1020**

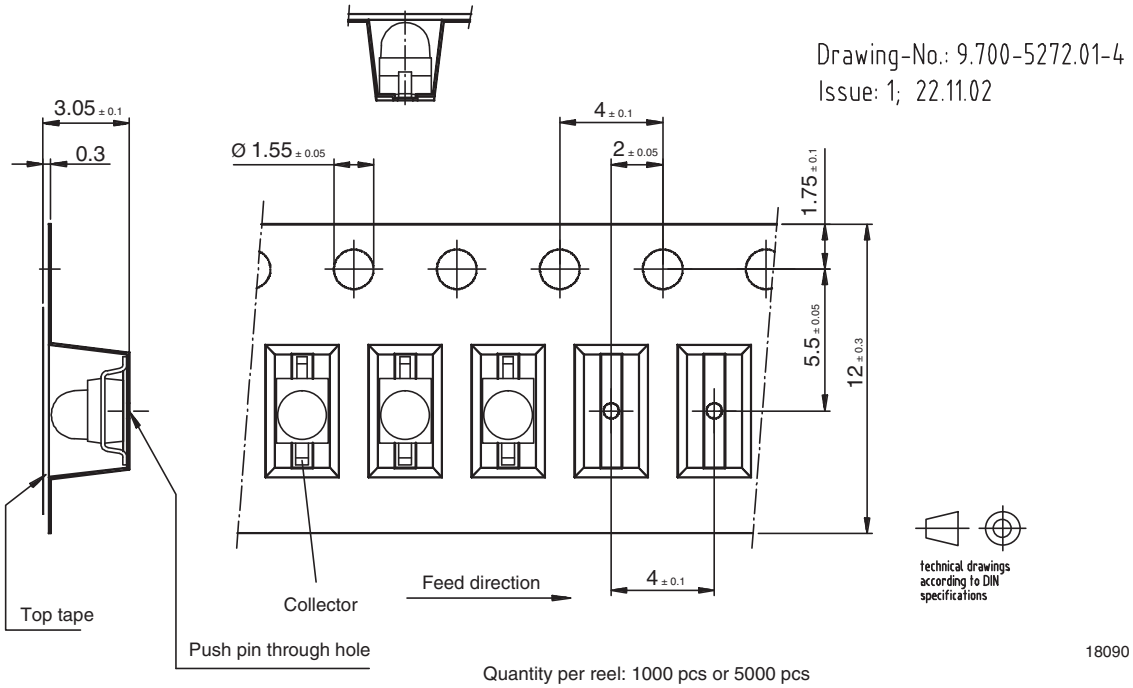

For technical questions, contact: detectortechsupport@vishay.com
THIS DOCUMENT IS SUBJECT TO CHANGE WITHOUT NOTICE. THE PRODUCTS DESCRIBED HEREIN AND THIS DOCUMENT ARE SUBJECT TO SPECIFIC DISCLAIMERS, SET FORTH AT www.vishay.com/doc?91000

TAPING DIMENSIONS in millimeters: TEMT1030

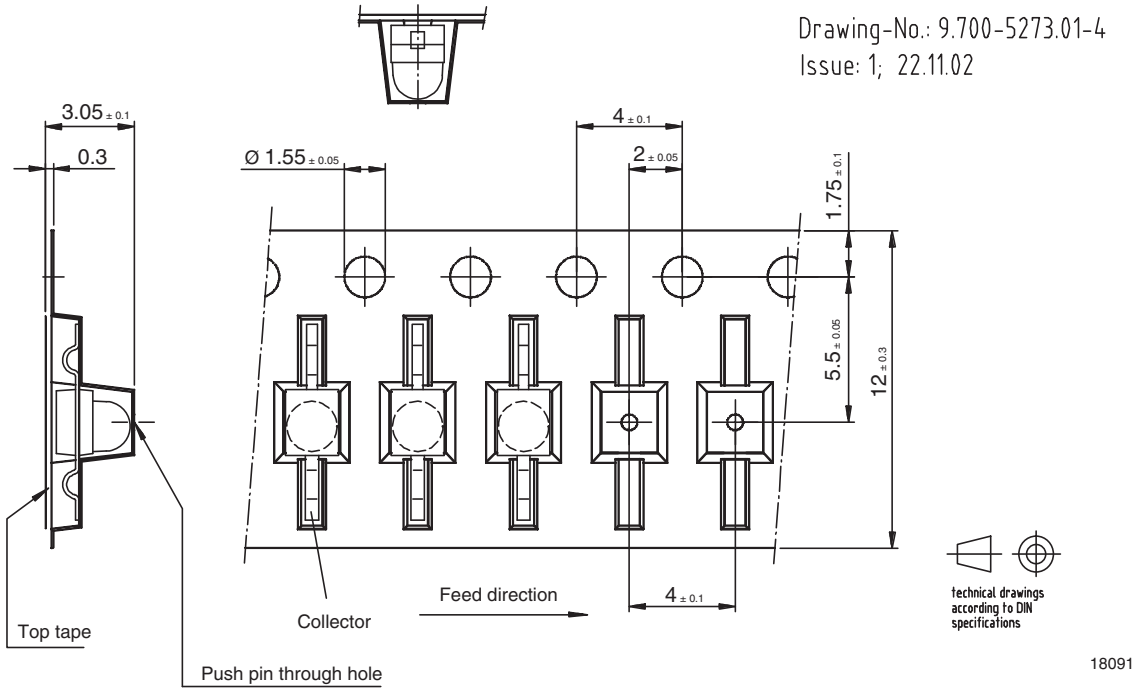

Quantity per reel: 1000 pcs or 5000 pcs

For technical questions, contact: detectortechsupport@vishay.com
THIS DOCUMENT IS SUBJECT TO CHANGE WITHOUT NOTICE. THE PRODUCTS DESCRIBED HEREIN AND THIS DOCUMENT ARE SUBJECT TO SPECIFIC DISCLAIMERS, SET FORTH AT www.vishay.com/doc?91000

Disclaimer

ALL PRODUCT, PRODUCT SPECIFICATIONS AND DATA ARE SUBJECT TO CHANGE WITHOUT NOTICE TO IMPROVE RELIABILITY, FUNCTION OR DESIGN OR OTHERWISE.

Vishay Intertechnology, Inc., its affiliates, agents, and employees, and all persons acting on its or their behalf (collectively, "Vishay"), disclaim any and all liability for any errors, inaccuracies or incompleteness contained in any datasheet or in any other disclosure relating to any product.

Vishay makes no warranty, representation or guarantee regarding the suitability of the products for any particular purpose or the continuing production of any product. To the maximum extent permitted by applicable law, Vishay disclaims (i) any and all liability arising out of the application or use of any product, (ii) any and all liability, including without limitation special, consequential or incidental damages, and (iii) any and all implied warranties, including warranties of fitness for particular purpose, non-infringement and merchantability.

Statements regarding the suitability of products for certain types of applications are based on Vishay's knowledge of typical requirements that are often placed on Vishay products in generic applications. Such statements are not binding statements about the suitability of products for a particular application. It is the customer's responsibility to validate that a particular product with the properties described in the product specification is suitable for use in a particular application. Parameters provided in datasheets and / or specifications may vary in different applications and performance may vary over time. All operating parameters, including typical parameters, must be validated for each customer application by the customer's technical experts. Product specifications do not expand or otherwise modify Vishay's terms and conditions of purchase, including but not limited to the warranty expressed therein.

Except as expressly indicated in writing, Vishay products are not designed for use in medical, life-saving, or life-sustaining applications or for any other application in which the failure of the Vishay product could result in personal injury or death. Customers using or selling Vishay products not expressly indicated for use in such applications do so at their own risk. Please contact authorized Vishay personnel to obtain written terms and conditions regarding products designed for such applications.

No license, express or implied, by estoppel or otherwise, to any intellectual property rights is granted by this document or by any conduct of Vishay. Product names and markings noted herein may be trademarks of their respective owners.