Optocoupler, Phototransistor Output, Very High Isolation Voltage

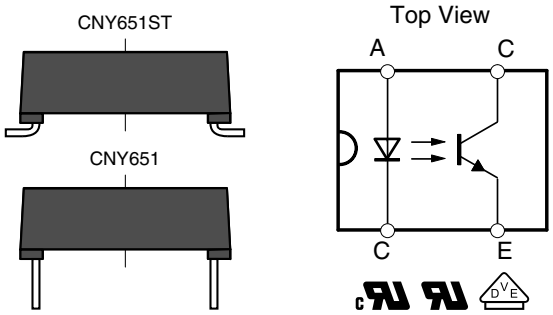

FEATURES

- Rated recurring peak voltage (repetitive) V_{IORM} = 1450 V_{peak}
- Thickness through insulation ≥ 3 mm
- Creepage current resistance according to VDE 0303 / IEC 60112 comparative tracking index: **CTI** ≥ 475
- Moisture sensitivity level MSL4
  - Follow defined storage and soldering requirements for CNY651ST devices
- Material categorization: for definitions of compliance please see www.vishay.com/doc?99912

Pb-free

e4

RoHS COMPLIANT

HALOGEN FREE GREEN (5-2008)

LINKS TO ADDITIONAL RESOURCES

3D Models | SPICE Models | Related Documents | Footprints

DESCRIPTION

The CNY651 Series are high isolation voltage TH and SMD version optocouplers consist of a phototransistor optically coupled to a gallium arsenide infrared-emitting diode in a 4 pin plastic package.

The single components are mounted opposite one another, providing a distance between input and output for highest safety requirements of > 3 mm.

VDE STANDARDS

These couplers perform safety functions according to the following equipment standards:

- **DIN EN 60747-5-5 (VDE 0884-5)**
  Optocoupler for electrical safety requirements

APPLICATIONS

- Solar and wind power diagnostic, monitoring, and communication equipment
- Welding equipment
- High voltage motors
- Switch-mode power supplies
- Line receiver
- Computer peripheral interface
- Microprocessor system interface
- Circuits for safe protective separation against electrical shock according to safety class II (reinforced isolation):
  - for appl. class I to IV at mains voltage ≤ 300 V
  - for appl. class I to IV at mains voltage ≤ 600 V
  - for appl. class I to III at mains voltage ≤ 1000 V according to DIN EN 60747-5-5 (VDE 0884-5)

AGENCY APPROVALS

Safety application model number covering all products in this datasheet is CNY651. This model number should be used when consulting safety agency documents.

- UL / cUL 1577
- DIN EN 60747-5-5 (VDE 0884-5)

ORDERING INFORMATION

C	N	Y	6	5	1	X	X	X	S	T
PART NUMBER				PACKAGE OPTION		CTR BIN				

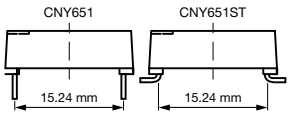

AGENCY CERTIFIED/PACKAGE	CTR (%)	
	5 mA	
UL, cUL, VDE	**50 to 150**	**100 to 300**
DIP-4 HV, 600 mil high isolation distance	-	CNY651AGR
SMD-4 HV, 600 mil high isolation distance	CNY651AYST	CNY651AGRST

For technical questions, contact: optocoupleranswers@vishay.com

THIS DOCUMENT IS SUBJECT TO CHANGE WITHOUT NOTICE. THE PRODUCTS DESCRIBED HEREIN AND THIS DOCUMENT ARE SUBJECT TO SPECIFIC DISCLAIMERS, SET FORTH AT www.vishay.com/doc?91000

ABSOLUTE MAXIMUM RATINGS (T_{amb} = 25 °C, unless otherwise specified)				
PARAMETER	**TEST CONDITION**	**SYMBOL**	**VALUE**	**UNIT**
INPUT				
Reverse voltage		V_R	5	V
Forward current		I_F	75	mA
Forward surge current	$t_p \leq 10$ µs	I_{FSM}	1.5	A
Power dissipation		P_{diss}	120	mW
Junction temperature		T_j	125	°C
OUTPUT				
Collector emitter voltage		V_{CEO}	32	V
Emitter collector voltage		V_{ECO}	7	V
Collector current		I_C	50	mA
Collector peak current	$t_p/T = 0.5$, $t_p \leq 10$ ms	I_{CM}	100	mA
Power dissipation		P_{diss}	130	mW
Junction temperature		T_j	125	°C
COUPLER				
Total power dissipation		P_{tot}	250	mW
Ambient temperature range		T_{amb}	-40 to +110	°C
Storage temperature range		T_{stg}	-40 to +110	°C
Soldering temperature for DIP devices	2 mm from case, ≤ 10 s	T_{sld}	260	°C
Soldering temperature for SMD devices	Please see Fig. 21	T_{sld}	245	°C

Note

- Stresses in excess of the absolute maximum ratings can cause permanent damage to the device. Functional operation of the device is not implied at these or any other conditions in excess of those given in the operational sections of this document. Exposure to absolute maximum ratings for extended periods of the time can adversely affect reliability

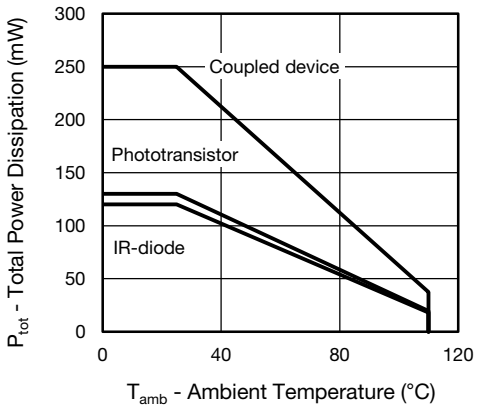

Fig. 1 - Total Power Dissipation vs. Ambient Temperature

ELECTRICAL CHARACTERISTICS (T_{amb} = 25 °C, unless otherwise specified)						
PARAMETER	**TEST CONDITION**	**SYMBOL**	**MIN.**	**TYP.**	**MAX.**	**UNIT**
INPUT						
Forward voltage	I_F = 50 mA	V_F	-	1.32	1.6	V
Junction capacitance	V_R = 0 V, f = 1 MHz	C_j	-	50	-	pF
OUTPUT						
Collector emitter voltage	I_C = 1 mA	V_{CEO}	32	-	-	V
Emitter collector voltage	I_E = 100 µA	V_{ECO}	7	-	-	V
Collector emitter leakage current	V_{CE} = 20 V, I_F = 0 mA	I_{CEO}	-	-	200	nA

For technical questions, contact: optocoupleranswers@vishay.com

THIS DOCUMENT IS SUBJECT TO CHANGE WITHOUT NOTICE. THE PRODUCTS DESCRIBED HEREIN AND THIS DOCUMENT ARE SUBJECT TO SPECIFIC DISCLAIMERS, SET FORTH AT www.vishay.com/doc?91000

ELECTRICAL CHARACTERISTICS (T_{amb} = 25 °C, unless otherwise specified)						
PARAMETER	**TEST CONDITION**	**SYMBOL**	**MIN.**	**TYP.**	**MAX.**	**UNIT**
COUPLER						
Collector emitter saturation voltage	I_F = 10 mA, I_C = 1 mA	V_{CEsat}	-	-	0.3	V
Cut-off frequency	V_{CE} = 5 V, I_F = 10 mA, R_L = 100 Ω	f_c	-	110	-	kHz
Coupling capacitance	f = 1 MHz	C_k	-	0.3	-	pF

Note

- Minimum and maximum values are testing requirements. Typical values are characteristics of the device and are the result of engineering evaluation. Typical values are for information only and are not part of the testing requirements

CURRENT TRANSFER RATIO (T_{amb} = 25 °C, unless otherwise specified)							
PARAMETER	**TEST CONDITION**	**BIN**	**SYMBOL**	**MIN.**	**TYP.**	**MAX.**	**UNIT**
I_C/I_F	V_{CE} = 5 V, I_F = 5 mA	AY.	CTR	50	-	150	%
		AGR.	CTR	100	-	300	%

SWITCHING CHARACTERISTICS						
PARAMETER	**TEST CONDITION**	**SYMBOL**	**MIN.**	**TYP.**	**MAX.**	**UNIT**
Delay time	V_S = 5 V, I_C = 5 mA, R_L = 100 Ω, (see Fig. 3)	t_d	-	2.6	-	µs
Rise time	V_S = 5 V, I_C = 5 mA, R_L = 100 Ω, (see Fig. 3)	t_r	-	2.4	-	µs
Fall time	V_S = 5 V, I_C = 5 mA, R_L = 100 Ω, (see Fig. 3)	t_f	-	2.7	-	µs
Storage time	V_S = 5 V, I_C = 5 mA, R_L = 100 Ω, (see Fig. 3)	t_s	-	0.3	-	µs
Turn-on time	V_S = 5 V, I_C = 5 mA, R_L = 100 Ω, (see Fig. 3)	t_{on}	-	5	-	µs
Turn-off time	V_S = 5 V, I_C = 5 mA, R_L = 100 Ω, (see Fig. 3)	t_{off}	-	3	-	µs
Turn-on time	V_S = 5 V, I_F = 10 mA, R_L = 1 kΩ, (see Fig. 4)	t_{on}	-	25	-	µs
Turn-off time	V_S = 5 V, I_F = 10 mA, R_L = 1 kΩ, (see Fig. 4)	t_{off}	-	42.5	-	µs

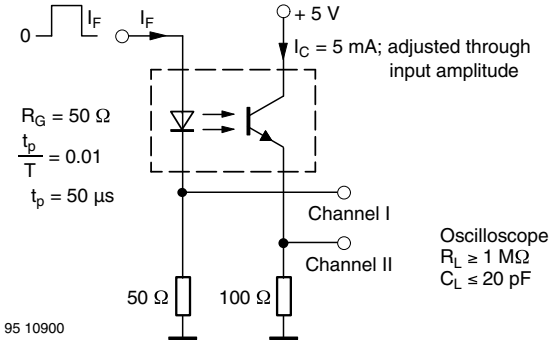

Fig. 2 - Test Circuit, Non-Saturated Operation

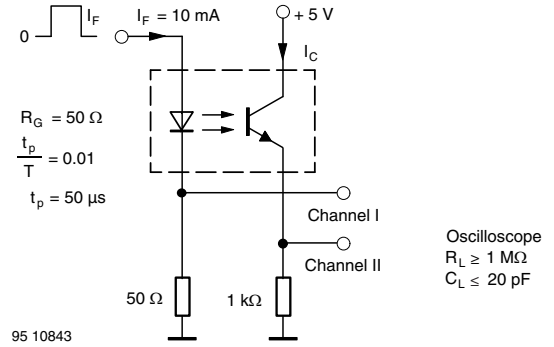

Fig. 3 - Test Circuit, Saturated Operation

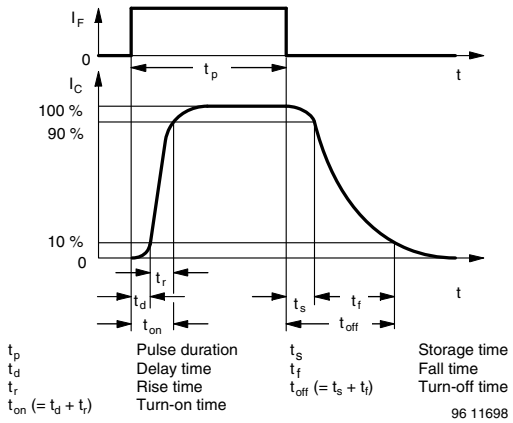

Fig. 4 - Switching Times

For technical questions, contact: optocoupleranswers@vishay.com

THIS DOCUMENT IS SUBJECT TO CHANGE WITHOUT NOTICE. THE PRODUCTS DESCRIBED HEREIN AND THIS DOCUMENT ARE SUBJECT TO SPECIFIC DISCLAIMERS, SET FORTH AT www.vishay.com/doc?91000

SAFETY AND INSULATION RATED PARAMETERS				
PARAMETER	**TEST CONDITION**	**SYMBOL**	**VALUE**	**UNIT**
Climatic classification	According to IEC 68 part 1		40 / 110 / 21	
Pollution degree	According to DIN VDE 0109		2	
Comparative tracking index	Insulation group IIIa	CTI	475	
Maximum rated withstanding isolation voltage	According to UL1577, t = 1 min	V_{ISO}	8200	V_{RMS}
Tested withstanding isolation voltage	According to UL1577, t = 1 s	V_{ISO}	13 900	V_{peak}
Maximum transient isolation voltage	According to DIN EN 60747-5-5	V_{IOTM}	12 000	V_{peak}
Maximum repetitive peak isolation voltage	According to DIN EN 60747-5-5	V_{IORM}	1450	V_{peak}
Isolation resistance	T_{amb} = 25 °C, V_{IO} = 500 V	R_{IO}	≥ 10^{12}	Ω
	T_{amb} = 110 °C, V_{IO} = 500 V	R_{IO}	≥ 10^{11}	Ω
	T_{amb} = T_S, V_{IO} = 500 V	R_{IO}	≥ 10^{9}	Ω
Output safety power		P_{SO}	250	mW
Input safety current		I_{SI}	120	mA
Input safety temperature		T_S	150	°C
Creepage distance			≥ 14	mm
Clearance distance			≥ 14	mm
Insulation thickness		DTI	≥ 3	mm
Input to output test voltage, method B	V_{IORM} x 1.875 = V_{PR}, 100 % production test with t_M = 1 s, partial discharge < 5 pC	V_{PR}	3375	V_{peak}
Input to output test voltage, method A	V_{IORM} x 1.6 = V_{PR}, 100 % sample test with t_M = 10 s, partial discharge < 5 pC	V_{PR}	2880	V_{peak}

Note

- According to DIN EN 60747-5-5 (see Fig. 6). This optocoupler is suitable for safe electrical isolation only within the safety ratings. Compliance with the safety ratings shall be ensured by means of suitable protective circuits

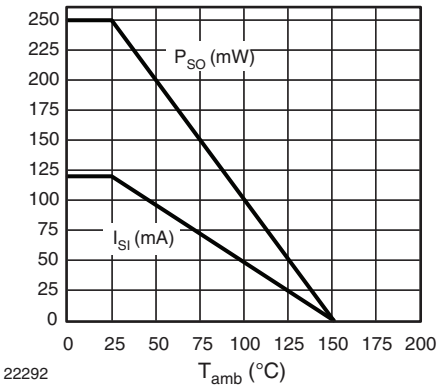

Fig. 5 - Safety Derating Diagram

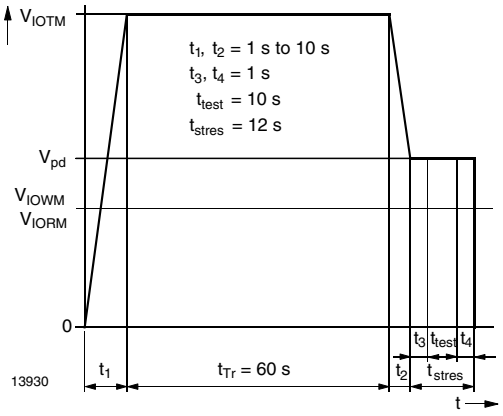

Fig. 6 - Test Pulse Diagram for Sample Test According to DIN EN 60747-5-5 (VDE 0884-5); IEC60747-5-5

For technical questions, contact: optocoupleranswers@vishay.com

THIS DOCUMENT IS SUBJECT TO CHANGE WITHOUT NOTICE. THE PRODUCTS DESCRIBED HEREIN AND THIS DOCUMENT ARE SUBJECT TO SPECIFIC DISCLAIMERS, SET FORTH AT www.vishay.com/doc?91000

TYPICAL CHARACTERISTICS (T_{amb} = 25 °C, unless otherwise specified)

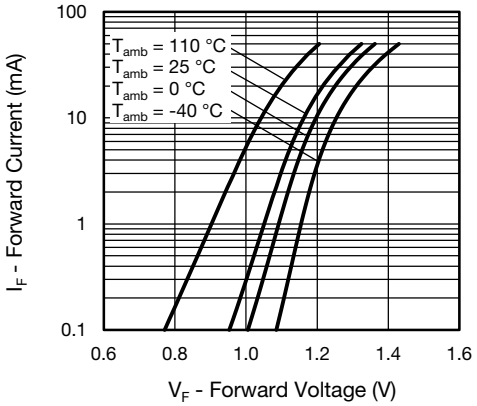

Fig. 7 - Forward Current vs. Forward Voltage

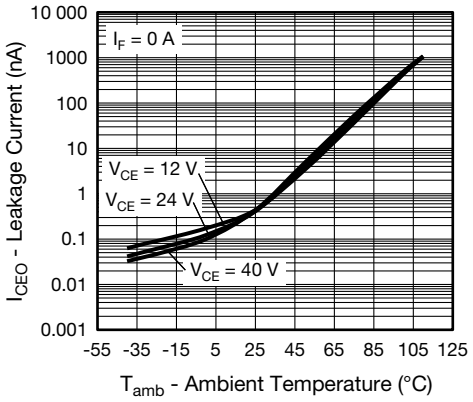

Fig. 10 - Leakage Current vs. Ambient Temperature

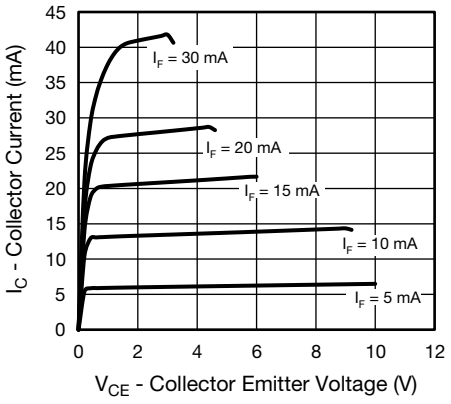

Fig. 8 - Collector Current vs. Collector Emitter Voltage (NS)

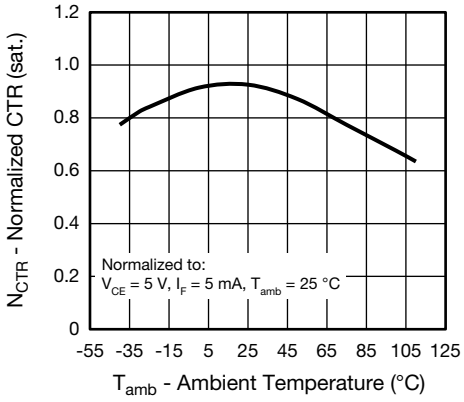

Fig. 11 - Normalized CTR (saturated) vs. Ambient Temperature

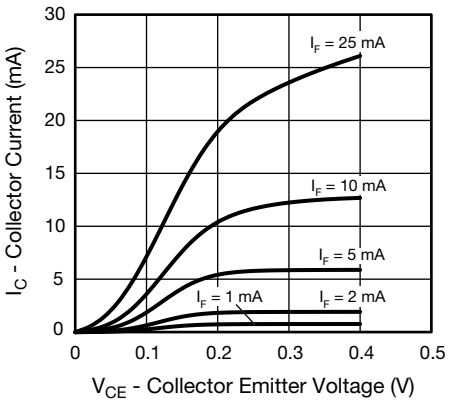

Fig. 9 - Collector Current vs. Collector Emitter Voltage

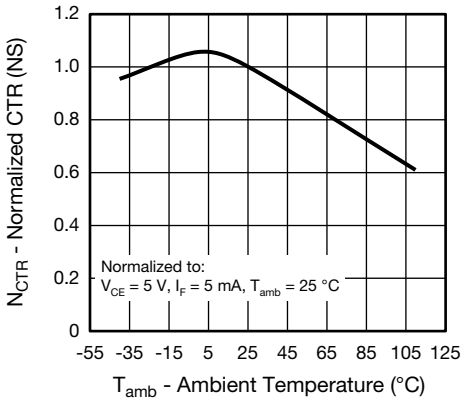

Fig. 12 - Normalized CTR (non-saturated) vs. Ambient Temperature

For technical questions, contact: optocoupleranswers@vishay.com
THIS DOCUMENT IS SUBJECT TO CHANGE WITHOUT NOTICE. THE PRODUCTS DESCRIBED HEREIN AND THIS DOCUMENT ARE SUBJECT TO SPECIFIC DISCLAIMERS, SET FORTH AT www.vishay.com/doc?91000

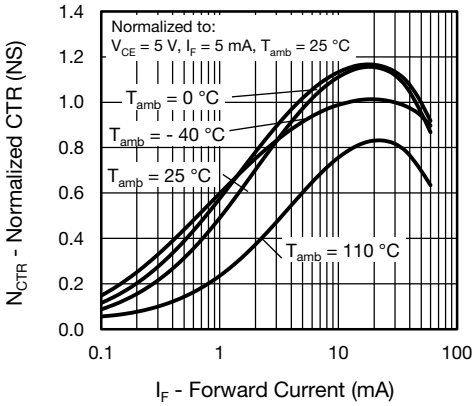

Fig. 13 - Normalized CTR (non-saturated) vs. Forward Current

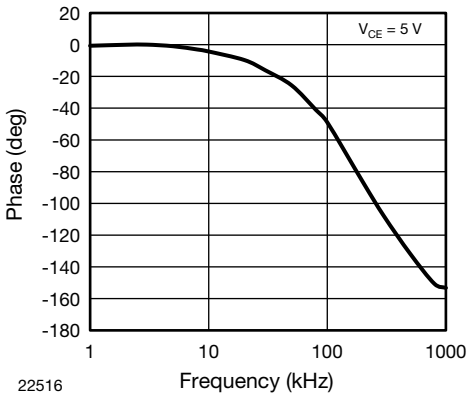

Fig. 16 - Phase Angle vs. F_{CTR}

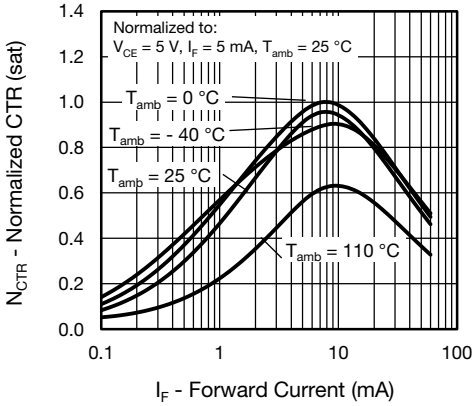

Fig. 14 - Normalized CTR (saturated) vs. Forward Current

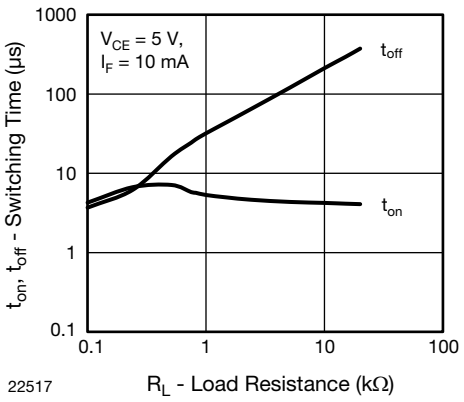

Fig. 17 - Switching Time vs. Load Resistance

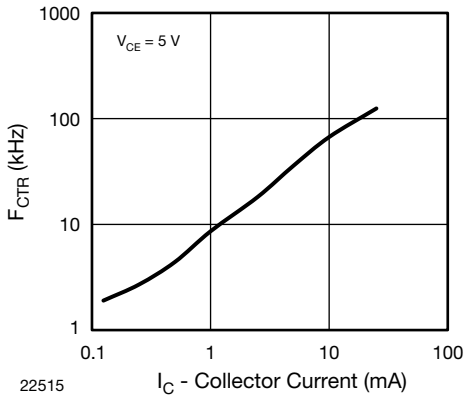

Fig. 15 - F_{CTR} vs. Collector Current

For technical questions, contact: optocoupleranswers@vishay.com
THIS DOCUMENT IS SUBJECT TO CHANGE WITHOUT NOTICE. THE PRODUCTS DESCRIBED HEREIN AND THIS DOCUMENT ARE SUBJECT TO SPECIFIC DISCLAIMERS, SET FORTH AT www.vishay.com/doc?91000

PACKAGE DIMENSIONS in millimeters FOR CNY651A...ST

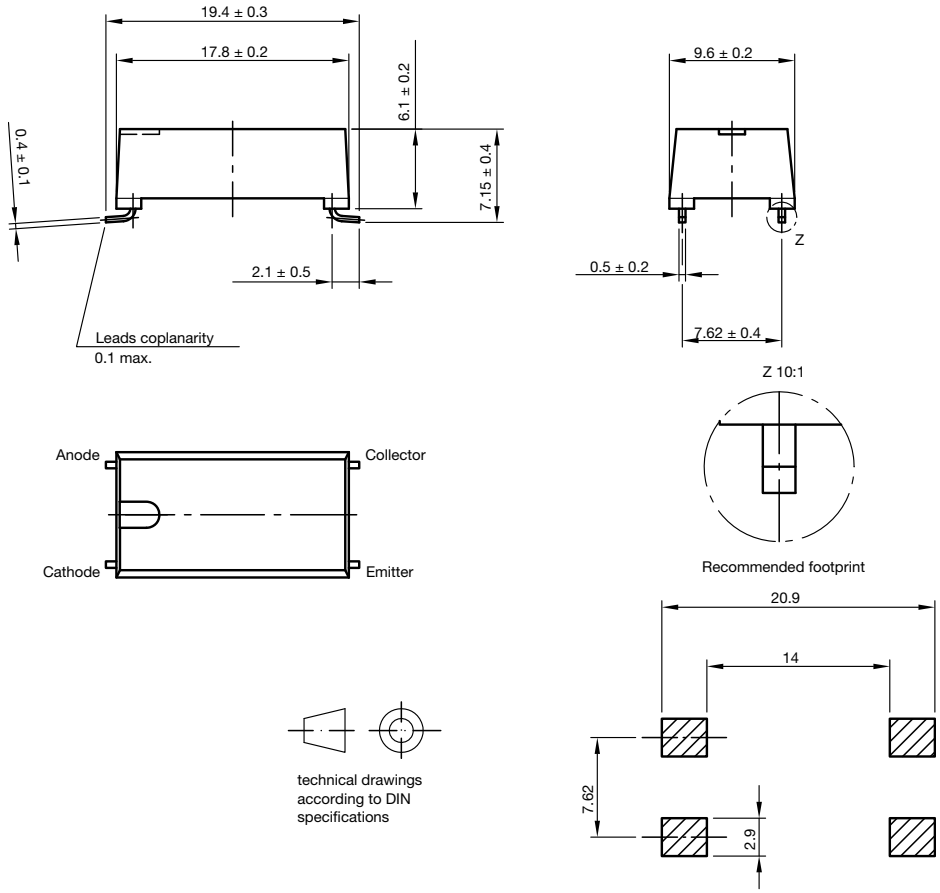

PACKAGE DIMENSIONS in millimeters FOR CNY651A...

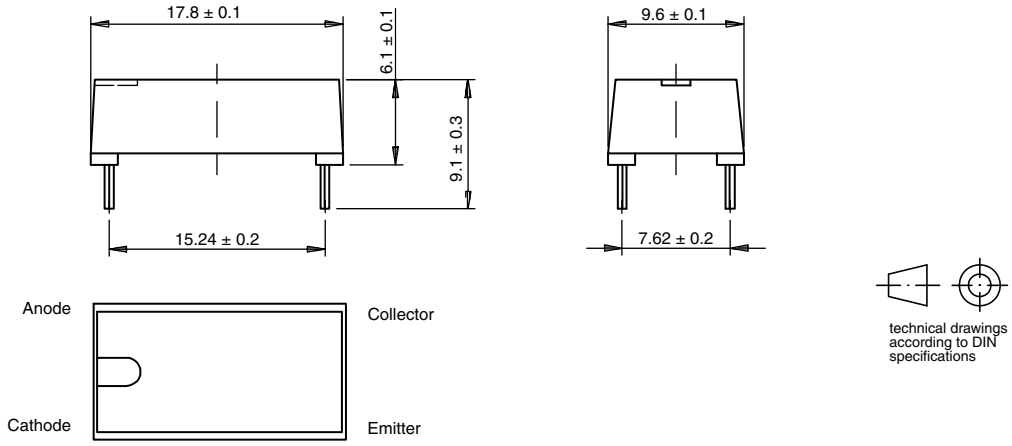

PACKAGE MARKING (Example of CNY651AYST)

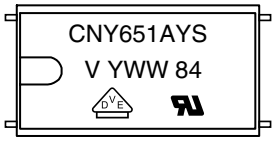

Note

- The “T” at the end of the product designation is not marked on the package

For technical questions, contact: optocoupleranswers@vishay.com
THIS DOCUMENT IS SUBJECT TO CHANGE WITHOUT NOTICE. THE PRODUCTS DESCRIBED HEREIN AND THIS DOCUMENT ARE SUBJECT TO SPECIFIC DISCLAIMERS, SET FORTH AT www.vishay.com/doc?91000

TUBE AND TAPE INFORMATION

TUBE INFORMATION			
TYPE	**UNITS/TUBE**	**TUBES/BOX**	**UNITS/BOX**
CNY651	30	35	1050

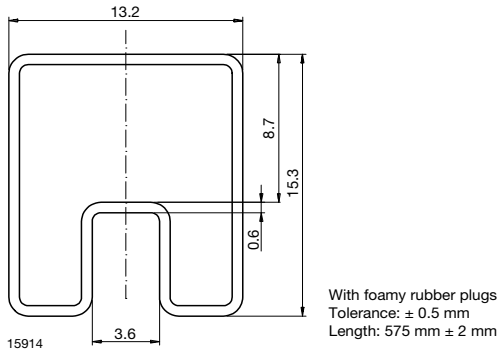

Fig. 18 - CNY651

TAPE DIMENSIONS in millimeters FOR CNY651A...ST

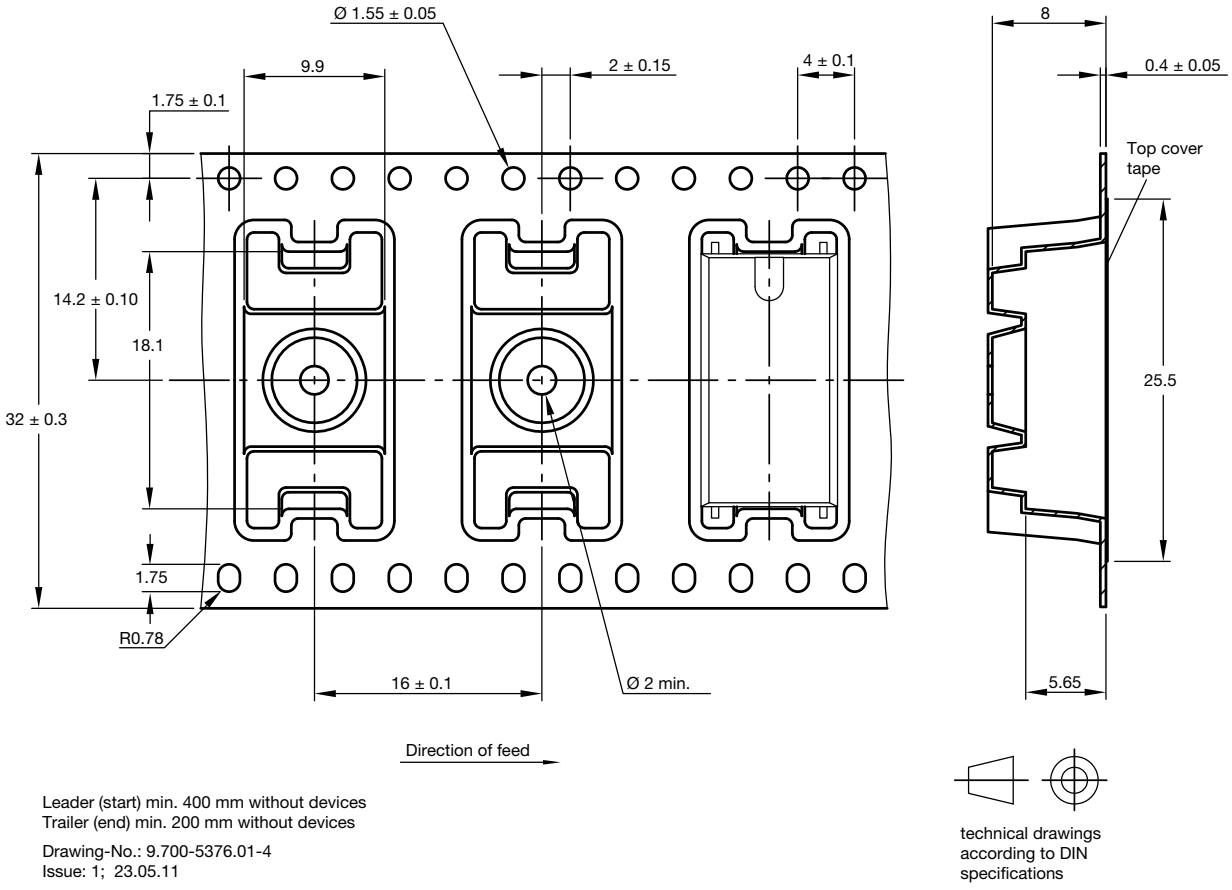

Leader (start) min. 400 mm without devices
Trailer (end) min. 200 mm without devices

Drawing-No.: 9.700-5376.01-4
Issue: 1; 23.05.11

technical drawings according to DIN specifications

TAPE AND REEL INFORMATION			
TYPE	**UNITS/REEL**	**REELS/BOX**	**UNITS/BOX**
CNY651ST	400	2	800

For technical questions, contact: optocoupleranswers@vishay.com
THIS DOCUMENT IS SUBJECT TO CHANGE WITHOUT NOTICE. THE PRODUCTS DESCRIBED HEREIN AND THIS DOCUMENT ARE SUBJECT TO SPECIFIC DISCLAIMERS, SET FORTH AT www.vishay.com/doc?91000

REEL DIMENSIONS in millimeters

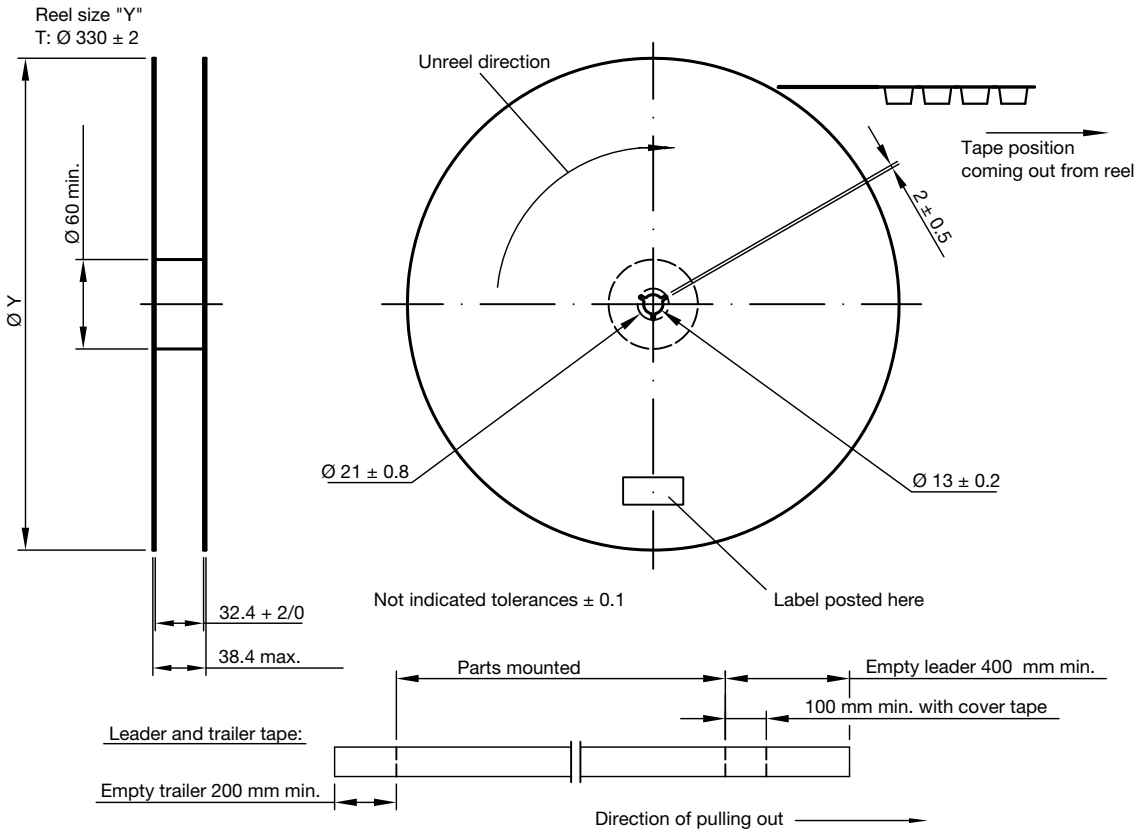

Fig. 19 - 400 Units per Reel, 2 Reels per Box

SOLDER PROFILES

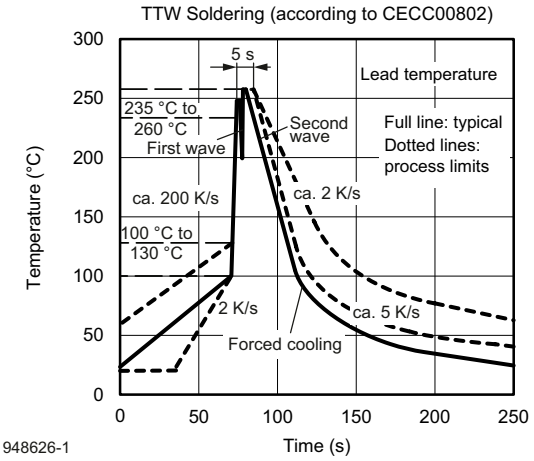

Fig. 20 - Recommended Wave Soldering Double Wave Profile for DIP Devices

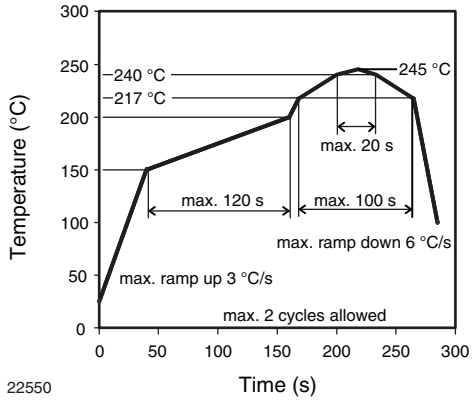

Fig. 21 - Recommended Lead (Pb)-free Reflow Solder Profile for SMD Devices

For technical questions, contact: optocoupleranswers@vishay.com
THIS DOCUMENT IS SUBJECT TO CHANGE WITHOUT NOTICE. THE PRODUCTS DESCRIBED HEREIN AND THIS DOCUMENT ARE SUBJECT TO SPECIFIC DISCLAIMERS, SET FORTH AT www.vishay.com/doc?91000

SOLDERING GUIDELINES

Soldering Condition

The CNY651AxST are lead (Pb)-free devices. They are suitable for reflow soldering. However due to large package size, the peak package body temperature should not go above 245 °C.

Drypack

These devices have a moisture sensitivity level MSL4 thus they are packed in moisture barrier bags (MBB) to prevent moisture absorption during transportation and storage. Each bag contains a desiccant bag.

Floor Life

Floor life (time between soldering and removing from MBB) must not exceed the time indicated on MBB label:

Floor life: 72 h

Conditions: T_{amb} < 30 °C, RH < 60 %

Moisture sensitivity level 4, according to J-STD-020.

Drying

In case of moisture absorption devices should be baked before soldering according to the recommended conditions shown below

48 h at 125 °C ± 5 °C, RH < 5%

(Not suitable for tape and reel)

In case the floor time has not exceeded 10 days the units can be baked in tape and reel according to the following conditions

168 h at 60 °C ± 5 °C, RH < 5 %

(Not suitable, if the floor time was exceeded by more than 10 days, or the allowed factory condition is exceeded)

CNY651 - DIP version device cannot go through reflow soldering hence wave soldering should be used. See absolute maximum ratings for soldering specifications.

For technical questions, contact: optocoupleranswers@vishay.com
THIS DOCUMENT IS SUBJECT TO CHANGE WITHOUT NOTICE. THE PRODUCTS DESCRIBED HEREIN AND THIS DOCUMENT ARE SUBJECT TO SPECIFIC DISCLAIMERS, SET FORTH AT www.vishay.com/doc?91000

Disclaimer

ALL PRODUCT, PRODUCT SPECIFICATIONS AND DATA ARE SUBJECT TO CHANGE WITHOUT NOTICE TO IMPROVE RELIABILITY, FUNCTION OR DESIGN OR OTHERWISE.

Vishay Intertechnology, Inc., its affiliates, agents, and employees, and all persons acting on its or their behalf (collectively, “Vishay”), disclaim any and all liability for any errors, inaccuracies or incompleteness contained in any datasheet or in any other disclosure relating to any product.

Vishay makes no warranty, representation or guarantee regarding the suitability of the products for any particular purpose or the continuing production of any product. To the maximum extent permitted by applicable law, Vishay disclaims (i) any and all liability arising out of the application or use of any product, (ii) any and all liability, including without limitation special, consequential or incidental damages, and (iii) any and all implied warranties, including warranties of fitness for particular purpose, non-infringement and merchantability.

Statements regarding the suitability of products for certain types of applications are based on Vishay's knowledge of typical requirements that are often placed on Vishay products in generic applications. Such statements are not binding statements about the suitability of products for a particular application. It is the customer's responsibility to validate that a particular product with the properties described in the product specification is suitable for use in a particular application. Parameters provided in datasheets and / or specifications may vary in different applications and performance may vary over time. All operating parameters, including typical parameters, must be validated for each customer application by the customer's technical experts. Product specifications do not expand or otherwise modify Vishay's terms and conditions of purchase, including but not limited to the warranty expressed therein.

Hyperlinks included in this datasheet may direct users to third-party websites. These links are provided as a convenience and for informational purposes only. Inclusion of these hyperlinks does not constitute an endorsement or an approval by Vishay of any of the products, services or opinions of the corporation, organization or individual associated with the third-party website. Vishay disclaims any and all liability and bears no responsibility for the accuracy, legality or content of the third-party website or for that of subsequent links.

Except as expressly indicated in writing, Vishay products are not designed for use in medical, life-saving, or life-sustaining applications or for any other application in which the failure of the Vishay product could result in personal injury or death. Customers using or selling Vishay products not expressly indicated for use in such applications do so at their own risk. Please contact authorized Vishay personnel to obtain written terms and conditions regarding products designed for such applications.

No license, express or implied, by estoppel or otherwise, to any intellectual property rights is granted by this document or by any conduct of Vishay. Product names and markings noted herein may be trademarks of their respective owners.

© 2024 VISHAY INTERTECHNOLOGY, INC. ALL RIGHTS RESERVED