Low Current 13 mm 7-Segment Display

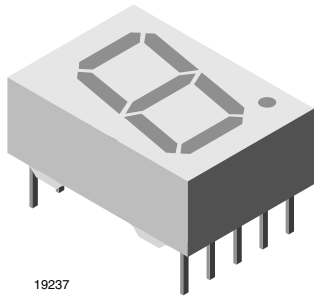

FEATURES

- Low power consumption
- Suitable for DC and multiplex operation
- Evenly lighted segments
- Grey package surface
- Untinted segments
- Luminous intensity categorized
- Wide viewing angle
- Material categorization: for definitions of compliance please see www.vishay.com/doc?99912

Pb-free

e4

RoHS COMPLIANT

DESCRIPTION

The TDSL51.0 series are 13 mm character seven segment low current LED displays in a very compact package.

The displays are designed for a viewing distance up to 7 m and available in high efficiency red. The grey package surface and the evenly lighted untinted segments provide an optimum on-off contrast.

All displays are categorized in luminous intensity groups. That allows users to assemble displays with uniform appearence.

Typical applications include instruments, panel meters, point-of-sale terminals and household equipment.

Due to the design of 13 mm displays, a certain amount of cross-talk between segments is unavoidable. This light leakage becomes more noticeable as the brightness of the operated segments increases. However, higher environmental illumination, or a partially transparent cover, may reduce this effect. Therefore, it's important to consider this phenomenon during design-in and to validate suitability for the particular application and all its operation modes.

APPLICATIONS

- Panel meters
- Test- and measure-equipment
- Point-of-sale terminals
- Control units

PRODUCT GROUP AND PACKAGE DATA

- Product group: display
- Package: 13 mm
- Product series: low current
- Angle of half intensity: ± 50°

PARTS TABLE

PART	COLOR	LUMINOUS INTENSITY (µcd)			at I_F (mA)	WAVELENGTH (nm)			at I_F (mA)	FORWARD VOLTAGE (V)			at I_F (mA)	CIRCUITRY
		MIN.	TYP.	MAX.		MIN.	TYP.	MAX.		MIN.	TYP.	MAX.		
TDSL5150	Red	280	400	-	2	612	-	625	2	-	1.8	2.4	2	Common anode
TDSL5160	Red	280	400	-	2	612	-	625	2	-	1.8	2.4	2	Common cathode

ABSOLUTE MAXIMUM RATINGS (T_{amb} = 25 °C, unless otherwise specified)
TDSL5150, TDSL5160

PARAMETER	TEST CONDITION	SYMBOL	VALUE	UNIT
Reverse voltage per segment		V_R	6	V
DC forward current per segment		I_F	15	mA
Peak forward current per segment		I_{FM}	45	mA
Surge forward current per segment	$t_p \leq 10$ µs (non repetitive)	I_{FSM}	100	mA
Power dissipation	$T_{amb} \leq 45$ °C	P_V	320	mW
Junction temperature		T_j	100	°C
Operating temperature range		T_{amb}	-40 to +85	°C
Storage temperature range		T_{stg}	-40 to +85	°C
Soldering temperature	t ≤ 3 s, 2 mm below seating plane	T_{sd}	260	°C
Thermal resistance LED junction to ambient		R_{thJA}	180	K/W

For technical questions, contact: LED@Vishay.com
THIS DOCUMENT IS SUBJECT TO CHANGE WITHOUT NOTICE. THE PRODUCTS DESCRIBED HEREIN AND THIS DOCUMENT ARE SUBJECT TO SPECIFIC DISCLAIMERS, SET FORTH AT www.vishay.com/doc?91000

OPTICAL AND ELECTRICAL CHARACTERISTICS (T_{amb} = 25 °C, unless otherwise specified) **TDSL5150, TDSL5160, RED**							
PARAMETER	**TEST CONDITION**	**PART**	**SYMBOL**	**MIN.**	**TYP.**	**MAX.**	**UNIT**
Luminous intensity per segment [1] (digit average)	I_F = 2 mA	TDSL5150	I_V	280	400	-	µcd
		TDSL5160	I_V	280	400	-	
	I_F = 5 mA	TDSL5150, TDSL5160	I_V	-	1600	-	
	I_F = 20 mA, t_p/T = 0.25		I_V	-	2000	-	
Dominant wavelength	I_F = 2 mA		λ_d	612	-	625	nm
Peak wavelength	I_F = 2 mA		λ_p	-	635	-	nm
Angle of half intensity	I_F = 2 mA		φ	-	± 50	-	°
Forward voltage per segment	I_F = 2 mA		V_F	-	1.8	2.4	V
	I_F = 20 mA		V_F	-	2.7	3	V
Reverse voltage per segment	I_F = 10 µA		V_R	6	20	-	V
Junction capacitance	V_R = 0 V, f = 1 MHz		C_j	-	30	-	pF

Note

[1] $I_{Vmin.}$ and I_V groups are mean values of all segments (a to g), matching factor within segments is ≥ 0.5, excluding decimal points and colon

LUMINOUS INTENSITY CLASSIFICATION		
GROUP	**LIGHT INTENSITY (µcd)**	
STANDARD	**MIN.**	**MAX.**
E	180	360
F	280	560
G	450	900
H	700	1400
I	1100	2200
K	1800	3600

TYPICAL CHARACTERISTICS (T_{amb} = 25 °C, unless otherwise specified)

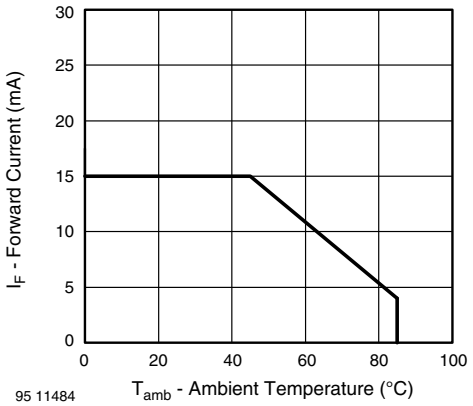

Fig. 1 - Forward Current vs. Ambient Temperature

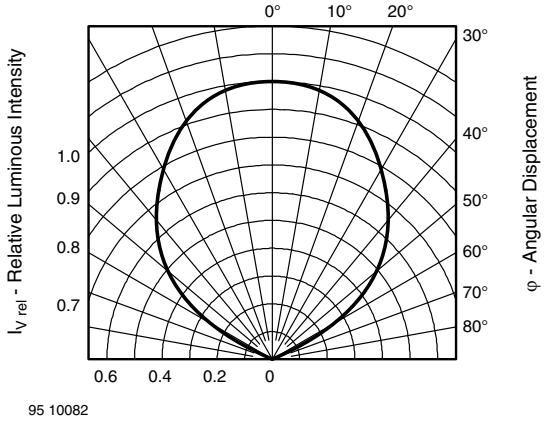

Fig. 2 - Relative Luminous Intensity vs. Angular Displacement

For technical questions, contact: LED@Vishay.com
THIS DOCUMENT IS SUBJECT TO CHANGE WITHOUT NOTICE. THE PRODUCTS DESCRIBED HEREIN AND THIS DOCUMENT ARE SUBJECT TO SPECIFIC DISCLAIMERS, SET FORTH AT www.vishay.com/doc?91000

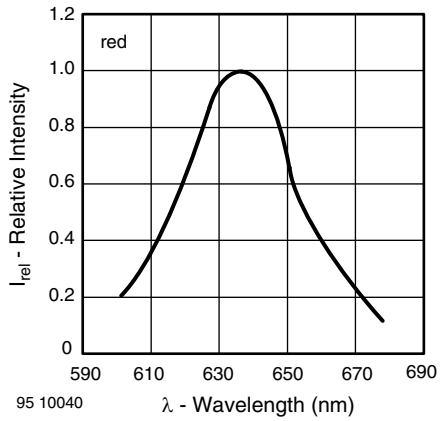

Fig. 3 - Relative Intensity vs. Wavelength

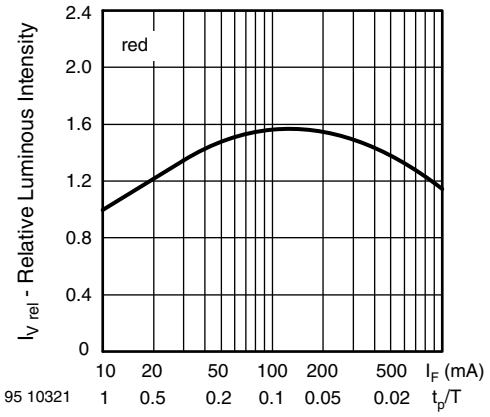

Fig. 6 - Relative Luminous Intensity vs. Forward Current/Duty Cycle

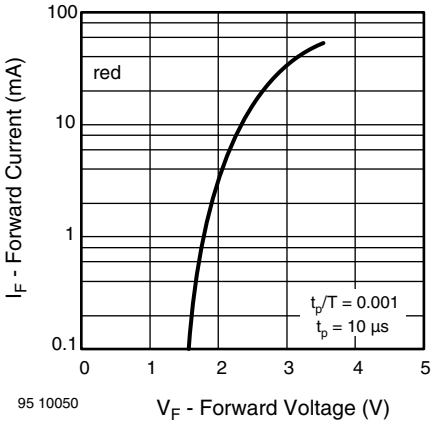

Fig. 4 - Forward Current vs. Forward Voltage

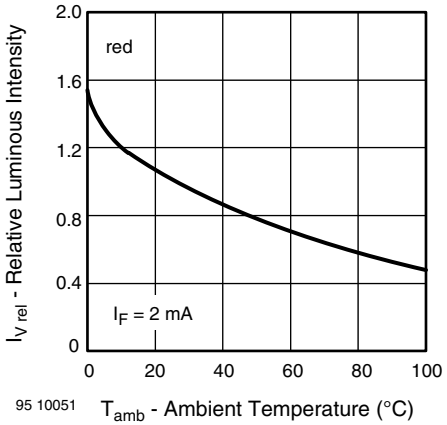

Fig. 7 - Relative Luminous Intensity vs. Ambient Temperature

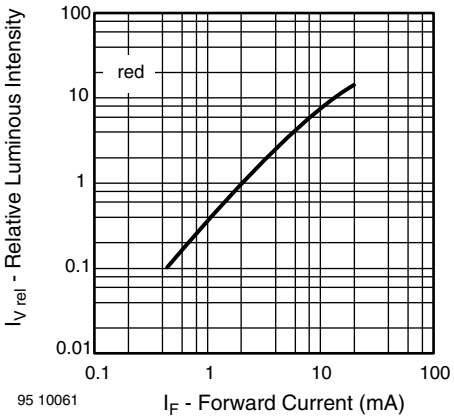

Fig. 5 - Relative Luminous Intensity vs. Forward Current

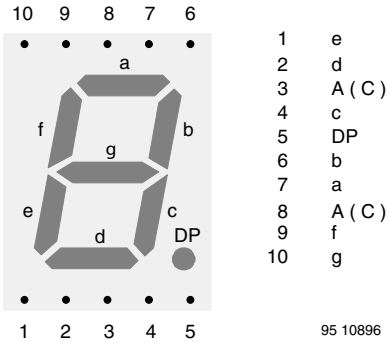

Fig. 8 - TDSL51..

For technical questions, contact: LED@Vishay.com
THIS DOCUMENT IS SUBJECT TO CHANGE WITHOUT NOTICE. THE PRODUCTS DESCRIBED HEREIN AND THIS DOCUMENT ARE SUBJECT TO SPECIFIC DISCLAIMERS, SET FORTH AT www.vishay.com/doc?91000

PACKAGE DIMENSIONS in millimeters

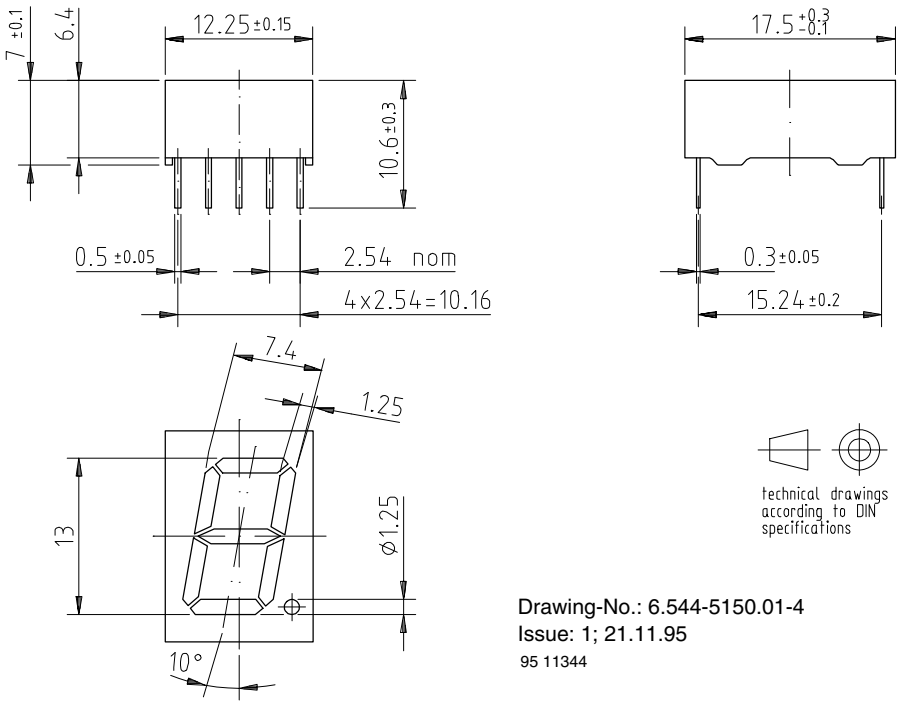

Drawing-No.: 6.544-5150.01-4
Issue: 1; 21.11.95
95 11344

LABEL OF FAN FOLD BOX (example)

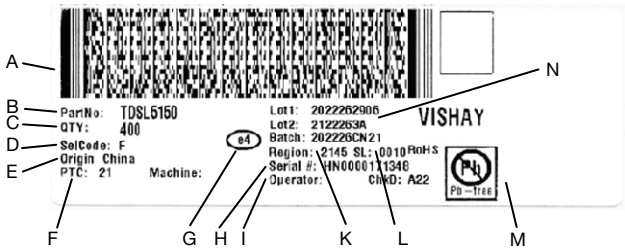

A. 2D barcode
B. Part No: Vishay part number
C. QTY: quantity
D. SelCode: selection bin code
E. Country of origin
F. PTC: production plant code
G. Termination finish
H. Region code
I. Serial#: serial number
K. Batch number: year, week, country code, plant code
L. SL: storage location
M. Environmental symbols: RoHS, lead (Pb)-free, halogen-free
N. Lot numbers

For technical questions, contact: LED@Vishay.com
THIS DOCUMENT IS SUBJECT TO CHANGE WITHOUT NOTICE. THE PRODUCTS DESCRIBED HEREIN AND THIS DOCUMENT ARE SUBJECT TO SPECIFIC DISCLAIMERS, SET FORTH AT www.vishay.com/doc?91000

Display-10 mm

Package Dimensions in mm

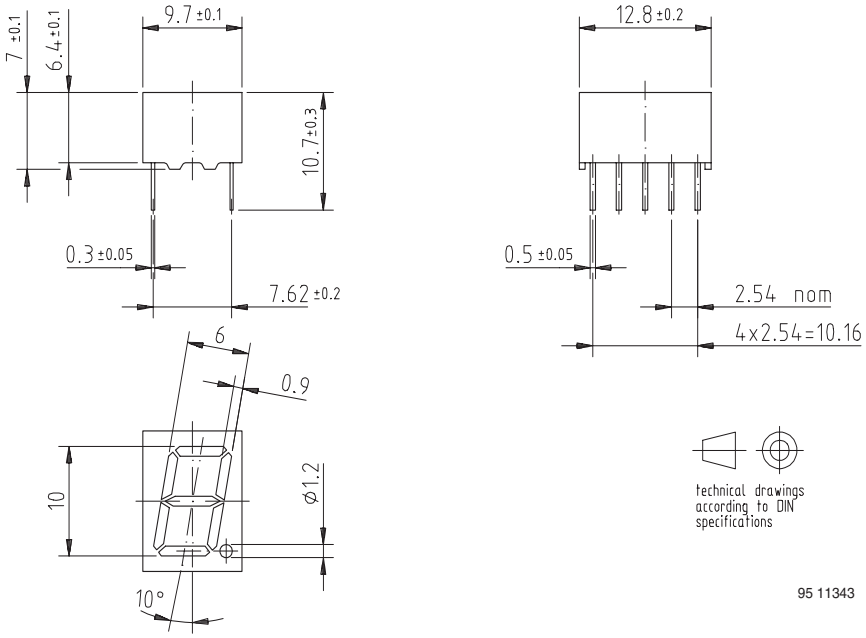

Ozone Depleting Substances Policy Statement

It is the policy of **Vishay Semiconductor GmbH** to

1. Meet all present and future national and international statutory requirements.
2. Regularly and continuously improve the performance of our products, processes, distribution and operatingsystems with respect to their impact on the health and safety of our employees and the public, as well as their impact on the environment.

It is particular concern to control or eliminate releases of those substances into the atmosphere which are known as ozone depleting substances (ODSs).

The Montreal Protocol (1987) and its London Amendments (1990) intend to severely restrict the use of ODSs and forbid their use within the next ten years. Various national and international initiatives are pressing for an earlier ban on these substances.

Vishay Semiconductor GmbH has been able to use its policy of continuous improvements to eliminate the use of ODSs listed in the following documents.

1. Annex A, B and list of transitional substances of the Montreal Protocol and the London Amendments respectively
2. Class I and II ozone depleting substances in the Clean Air Act Amendments of 1990 by the Environmental Protection Agency (EPA) in the USA
3. Council Decision 88/540/EEC and 91/690/EEC Annex A, B and C (transitional substances) respectively.

Vishay Semiconductor GmbH can certify that our semiconductors are not manufactured with ozone depleting substances and do not contain such substances.

We reserve the right to make changes to improve technical design and may do so without further notice.

Parameters can vary in different applications. All operating parameters must be validated for each customer application by the customer. Should the buyer use Vishay Semiconductors products for any unintended or unauthorized application, the buyer shall indemnify Vishay Semiconductors against all claims, costs, damages, and expenses, arising out of, directly or indirectly, any claim of personal damage, injury or death associated with such unintended or unauthorized use.

Vishay Semiconductor GmbH, P.O.B. 3535, D-74025 Heilbronn, Germany
Telephone: 49 (0)7131 67 2831, Fax number: 49 (0)7131 67 2423

Pin Connections 10 mm

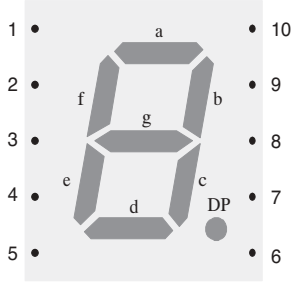

1	g
2	f
3	A (C)
4	e
5	d
6	DP
7	c
8	A (C)
9	b
10	a

96 11678

Ozone Depleting Substances Policy Statement

It is the policy of **Vishay Semiconductor GmbH** to

1. Meet all present and future national and international statutory requirements.
2. Regularly and continuously improve the performance of our products, processes, distribution and operatingsystems with respect to their impact on the health and safety of our employees and the public, as well as their impact on the environment.

It is particular concern to control or eliminate releases of those substances into the atmosphere which are known as ozone depleting substances (ODSs).

The Montreal Protocol (1987) and its London Amendments (1990) intend to severely restrict the use of ODSs and forbid their use within the next ten years. Various national and international initiatives are pressing for an earlier ban on these substances.

Vishay Semiconductor GmbH has been able to use its policy of continuous improvements to eliminate the use of ODSs listed in the following documents.

1. Annex A, B and list of transitional substances of the Montreal Protocol and the London Amendments respectively
2. Class I and II ozone depleting substances in the Clean Air Act Amendments of 1990 by the Environmental Protection Agency (EPA) in the USA
3. Council Decision 88/540/EEC and 91/690/EEC Annex A, B and C (transitional substances) respectively.

Vishay Semiconductor GmbH can certify that our semiconductors are not manufactured with ozone depleting substances and do not contain such substances.

We reserve the right to make changes to improve technical design and may do so without further notice.
Parameters can vary in different applications. All operating parameters must be validated for each customer application by the customer. Should the buyer use Vishay Semiconductors products for any unintended or unauthorized application, the buyer shall indemnify Vishay Semiconductors against all claims, costs, damages, and expenses, arising out of, directly or indirectly, any claim of personal damage, injury or death associated with such unintended or unauthorized use.

Vishay Semiconductor GmbH, P.O.B. 3535, D-74025 Heilbronn, Germany
Telephone: 49 (0)7131 67 2831, Fax number: 49 (0)7131 67 2423

Disclaimer

ALL PRODUCT, PRODUCT SPECIFICATIONS AND DATA ARE SUBJECT TO CHANGE WITHOUT NOTICE TO IMPROVE RELIABILITY, FUNCTION OR DESIGN OR OTHERWISE.

Vishay Intertechnology, Inc., its affiliates, agents, and employees, and all persons acting on its or their behalf (collectively, “Vishay”), disclaim any and all liability for any errors, inaccuracies or incompleteness contained in any datasheet or in any other disclosure relating to any product.

Vishay makes no warranty, representation or guarantee regarding the suitability of the products for any particular purpose or the continuing production of any product. To the maximum extent permitted by applicable law, Vishay disclaims (i) any and all liability arising out of the application or use of any product, (ii) any and all liability, including without limitation special, consequential or incidental damages, and (iii) any and all implied warranties, including warranties of fitness for particular purpose, non-infringement and merchantability.

Statements regarding the suitability of products for certain types of applications are based on Vishay's knowledge of typical requirements that are often placed on Vishay products in generic applications. Such statements are not binding statements about the suitability of products for a particular application. It is the customer's responsibility to validate that a particular product with the properties described in the product specification is suitable for use in a particular application. Parameters provided in datasheets and / or specifications may vary in different applications and performance may vary over time. All operating parameters, including typical parameters, must be validated for each customer application by the customer's technical experts. Product specifications do not expand or otherwise modify Vishay's terms and conditions of purchase, including but not limited to the warranty expressed therein.

Hyperlinks included in this datasheet may direct users to third-party websites. These links are provided as a convenience and for informational purposes only. Inclusion of these hyperlinks does not constitute an endorsement or an approval by Vishay of any of the products, services or opinions of the corporation, organization or individual associated with the third-party website. Vishay disclaims any and all liability and bears no responsibility for the accuracy, legality or content of the third-party website or for that of subsequent links.

Except as expressly indicated in writing, Vishay products are not designed for use in medical, life-saving, or life-sustaining applications or for any other application in which the failure of the Vishay product could result in personal injury or death. Customers using or selling Vishay products not expressly indicated for use in such applications do so at their own risk. Please contact authorized Vishay personnel to obtain written terms and conditions regarding products designed for such applications.

No license, express or implied, by estoppel or otherwise, to any intellectual property rights is granted by this document or by any conduct of Vishay. Product names and markings noted herein may be trademarks of their respective owners.

© 2024 VISHAY INTERTECHNOLOGY, INC. ALL RIGHTS RESERVED