# E Series Power MOSFET

| PRODUCT SUMMARY | | |
|---|---|---|
| $V_{DS}$ (V) at $T_J$ max. | 650 | |
| $R_{DS(on)}$ max. at 25 °C (Ω) | $V_{GS}$ = 10 V | 0.6 |
| $Q_g$ max. (nC) | 40 | |
| $Q_{gs}$ (nC) | 5 | |
| $Q_{gd}$ (nC) | 9 | |
| Configuration | Single | |

## FEATURES

- Low figure-of-merit (FOM) $R_{on}$ x $Q_g$
- Low input capacitance ($C_{iss}$)
- Reduced switching and conduction losses
- Ultra low gate charge ($Q_g$)
- Avalanche energy rated (UIS)
- Material categorization: for definitions of compliance please see www.vishay.com/doc?99912

RoHS COMPLIANT

HALOGEN FREE

## APPLICATIONS

- Server and telecom power supplies
- Switch mode power supplies (SMPS)
- Power factor correction power supplies (PFC)
- Lighting
  - High-intensity discharge (HID)
  - Fluorescent ballast lighting
- Industrial
  - Welding
  - Induction heating
  - Motor drives
  - Battery chargers
  - Renewable energy
  - Solar (PV inverters)

IPAK
(TO-251)

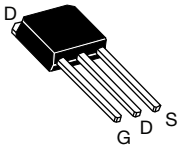


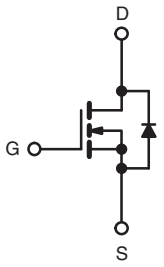


N-Channel MOSFET

| ORDERING INFORMATION | |
|---|---|
| Package | IPAK (TO-251) |
| Lead (Pb)-free and Halogen-free | SiHU7N60E-GE3 |

**ABSOLUTE MAXIMUM RATINGS** ($T_C$ = 25 °C, unless otherwise noted)

| PARAMETER | | | SYMBOL | LIMIT | UNIT |
|---|---|---|---|---|---|
| Drain-Source Voltage | | | $V_{DS}$ | 600 | V |
| | $T_C$ = -25 °C, $I_D$ = 250 µA | | | 575 | |
| Gate-Source Voltage | | | $V_{GS}$ | ± 30 | |
| Continuous Drain Current ($T_J$ = 150 °C) | $V_{GS}$ at 10 V | $T_C$ = 25 °C | $I_D$ | 7 | A |
| | | $T_C$ = 100 °C | | 5 | |
| Pulsed Drain Current [a] | | | $I_{DM}$ | 18 | |
| Linear Derating Factor | | | | 0.63 | W/°C |
| Single Pulse Avalanche Energy [b] | | | $E_{AS}$ | 43 | mJ |
| Maximum Power Dissipation | | | $P_D$ | 78 | W |
| Operating Junction and Storage Temperature Range | | | $T_J$, $T_{stg}$ | -55 to +150 | °C |
| Drain-Source Voltage Slope | $T_J$ = 125 °C | | dV/dt | 70 | V/ns |
| Reverse Diode dV/dt [d] | | | | 3 | |
| Soldering Recommendations (Peak Temperature) [c] | for 10 s | | | 300 | °C |

**Notes**

a. Repetitive rating; pulse width limited by maximum junction temperature.
b. $V_{DD}$ = 50 V, starting $T_J$ = 25 °C, L = 13.8 mH, $R_g$ = 25 Ω, $I_{AS}$ = 2.5 A.
c. 1.6 mm from case.
d. $I_{SD} \leq I_D$, dI/dt = 100 A/µs, starting $T_J$ = 25 °C.



For technical questions, contact: hvm@vishay.com

THIS DOCUMENT IS SUBJECT TO CHANGE WITHOUT NOTICE. THE PRODUCTS DESCRIBED HEREIN AND THIS DOCUMENT ARE SUBJECT TO SPECIFIC DISCLAIMERS, SET FORTH AT www.vishay.com/doc?91000

## THERMAL RESISTANCE RATINGS

| PARAMETER | SYMBOL | TYP. | MAX. | UNIT |
|---|---|---|---|---|
| Maximum Junction-to-Ambient | $R_{thJA}$ | - | 62 | °C/W |
| Maximum Junction-to-Case (Drain) | $R_{thJC}$ | - | 1.6 | |

## SPECIFICATIONS ($T_J$ = 25 °C, unless otherwise noted)

| PARAMETER | SYMBOL | TEST CONDITIONS | MIN. | TYP. | MAX. | UNIT |
|---|---|---|---|---|---|---|
| **Static** | | | | | | |
| Drain-Source Breakdown Voltage | $V_{DS}$ | $V_{GS}$ = 0 V, $I_D$ = 250 µA | 609 | - | - | V |
| $V_{DS}$ Temperature Coefficient | $\Delta V_{DS}/T_J$ | Reference to 25 °C, $I_D$ = 1 mA | - | 0.68 | - | V/°C |
| Gate-Source Threshold Voltage (N) | $V_{GS(th)}$ | $V_{DS}$ = $V_{GS}$, $I_D$ = 250 µA | 2 | - | 4 | V |
| Gate-Source Leakage | $I_{GSS}$ | $V_{GS}$ = ± 20 V | - | - | ± 100 | nA |
| | | $V_{GS}$ = ± 30 V | - | - | ± 1 | µA |
| Zero Gate Voltage Drain Current | $I_{DSS}$ | $V_{DS}$ = 600 V, $V_{GS}$ = 0 V | - | - | 1 | µA |
| | | $V_{DS}$ = 480 V, $V_{GS}$ = 0 V, $T_J$ = 125 °C | - | - | 10 | |
| Drain-Source On-State Resistance | $R_{DS(on)}$ | $V_{GS}$ = 10 V, $I_D$ = 3.5 A | - | 0.5 | 0.6 | Ω |
| Forward Transconductance | $g_{fs}$ | $V_{DS}$ = 50 V, $I_D$ = 3.5 A | - | 1.9 | - | S |
| **Dynamic** | | | | | | |
| Input Capacitance | $C_{iss}$ | $V_{GS}$ = 0 V, $V_{DS}$ = 100 V, f = 1 MHz | - | 680 | - | pF |
| Output Capacitance | $C_{oss}$ | | - | 39 | - | |
| Reverse Transfer Capacitance | $C_{rss}$ | | - | 5 | - | |
| Effective Output Capacitance, Energy Related [a] | $C_{o(er)}$ | $V_{DS}$ = 0 V to 480 V, $V_{GS}$ = 0 V | - | 34 | - | |
| Effective Output Capacitance, Time Related [b] | $C_{o(tr)}$ | | - | 100 | - | |
| Total Gate Charge | $Q_g$ | $V_{GS}$ = 10 V; $I_D$ = 3.5 A, $V_{DS}$ = 480 V | - | 20 | 40 | nC |
| Gate-Source Charge | $Q_{gs}$ | | - | 5 | - | |
| Gate-Drain Charge | $Q_{gd}$ | | - | 9 | - | |
| Turn-On Delay Time | $t_{d(on)}$ | $V_{DD}$ = 480 V, $I_D$ = 3.5 A, $V_{GS}$ = 10 V, $R_g$ = 9.1 Ω | - | 13 | 26 | ns |
| Rise Time | $t_r$ | | - | 13 | 26 | |
| Turn-Off Delay Time | $t_{d(off)}$ | | - | 24 | 48 | |
| Fall Time | $t_f$ | | - | 14 | 28 | |
| Gate Input Resistance | $R_g$ | f = 1 MHz, open drain | - | 1.1 | - | Ω |
| **Drain-Source Body Diode Characteristics** | | | | | | |
| Continuous Source-Drain Diode Current | $I_S$ | MOSFET symbol showing the integral reverse p - n junction diode | - | - | 7 | A |
| Pulsed Diode Forward Current | $I_{SM}$ | | - | - | 18 | |
| Diode Forward Voltage | $V_{SD}$ | $T_J$ = 25 °C, $I_S$ = 3.5 A, $V_{GS}$ = 0 V | - | - | 1.2 | V |
| Reverse Recovery Time | $t_{rr}$ | $T_J$ = 25 °C, $I_F$ = $I_S$ = 3.5 A, dI/dt = 100 A/µs, $V_R$ = 20 V | - | 230 | - | ns |
| Reverse Recovery Charge | $Q_{rr}$ | | - | 1.9 | - | µC |
| Reverse Recovery Current | $I_{RRM}$ | | - | 14 | - | A |

**Notes**

a. $C_{oss(er)}$ is a fixed capacitance that gives the same energy as $C_{oss}$ while $V_{DS}$ is rising from 0 % to 80 % $V_{DSS}$.

b. $C_{oss(tr)}$ is a fixed capacitance that gives the same charging time as $C_{oss}$ while $V_{DS}$ is rising from 0 % to 80 % $V_{DSS}$.



For technical questions, contact: hvm@vishay.com
THIS DOCUMENT IS SUBJECT TO CHANGE WITHOUT NOTICE. THE PRODUCTS DESCRIBED HEREIN AND THIS DOCUMENT ARE SUBJECT TO SPECIFIC DISCLAIMERS, SET FORTH AT www.vishay.com/doc?91000

## TYPICAL CHARACTERISTICS (25 °C, unless otherwise noted)

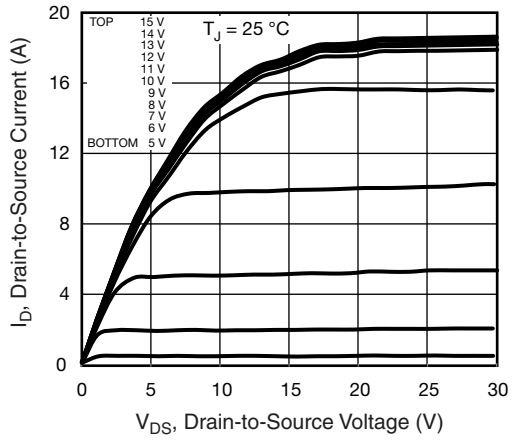


**Fig. 1 - Typical Output Characteristics**

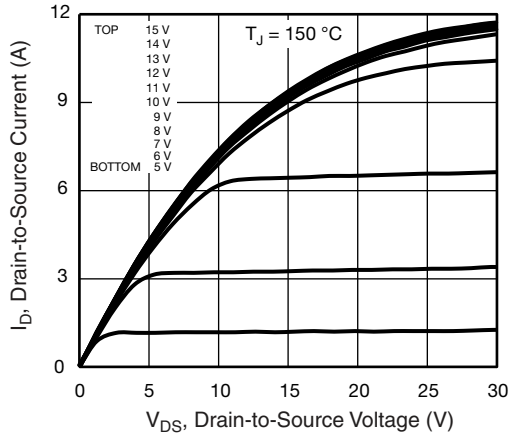


**Fig. 2 - Typical Output Characteristics**

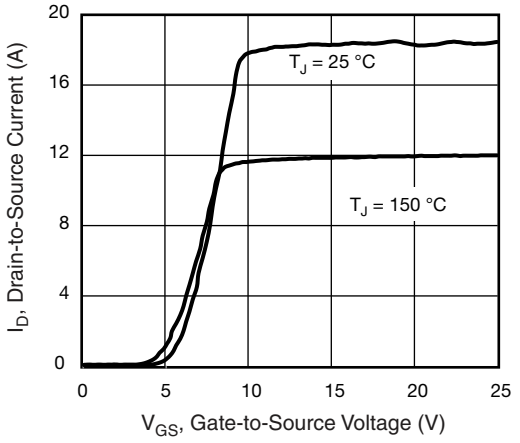


**Fig. 3 - Typical Transfer Characteristics**

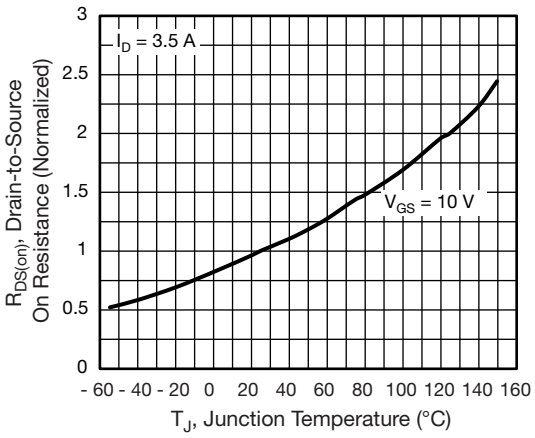


**Fig. 4 - Normalized On-Resistance vs. Temperature**

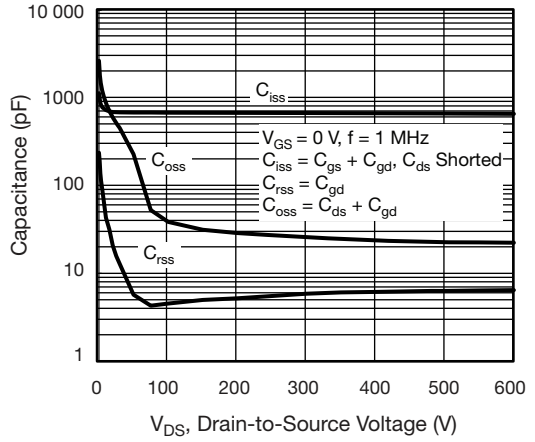


**Fig. 5 - Typical Capacitance vs. Drain-to-Source Voltage**

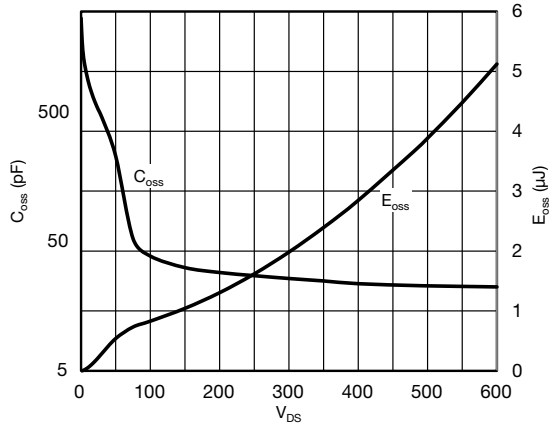


**Fig. 6 - $C_{oss}$ and $E_{oss}$ vs. $V_{DS}$**


For technical questions, contact: hvm@vishay.com
THIS DOCUMENT IS SUBJECT TO CHANGE WITHOUT NOTICE. THE PRODUCTS DESCRIBED HEREIN AND THIS DOCUMENT ARE SUBJECT TO SPECIFIC DISCLAIMERS, SET FORTH AT www.vishay.com/doc?91000

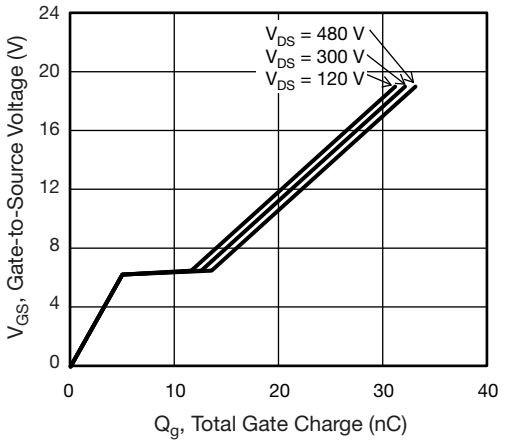


**Fig. 7 - Typical Gate Charge vs. Gate-to-Source Voltage**

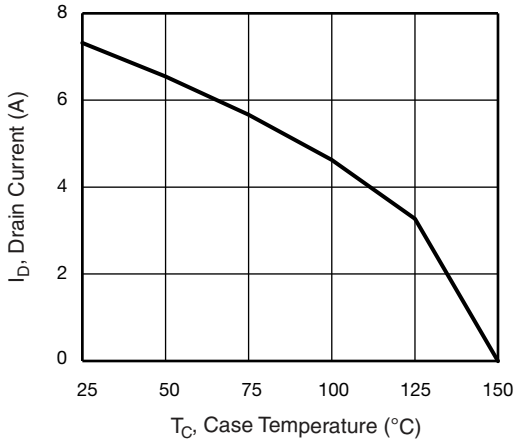


**Fig. 10 - Maximum Drain Current vs. Case Temperature**

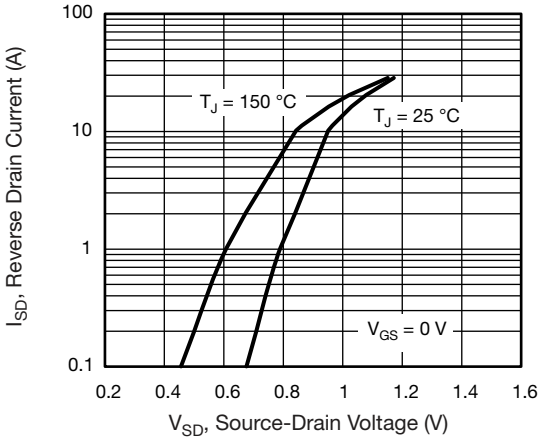


**Fig. 8 - Typical Source-Drain Diode Forward Voltage**

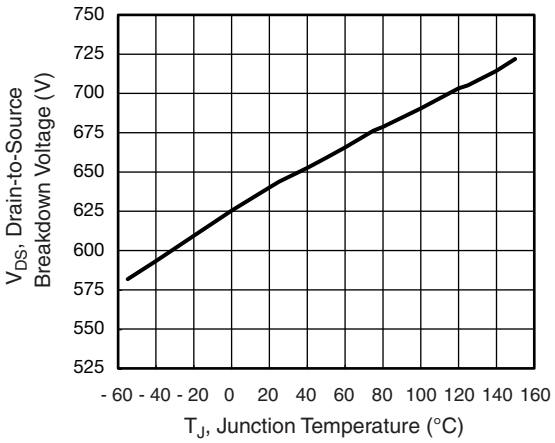


**Fig. 11 - Temperature vs. Drain-to-Source Voltage**

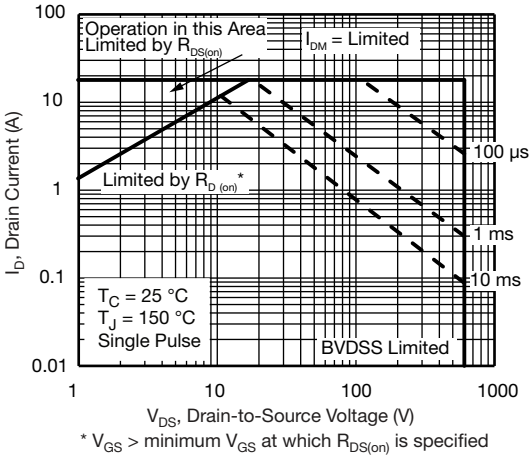


**Fig. 9 - Maximum Safe Operating Area**


For technical questions, contact: hvm@vishay.com
THIS DOCUMENT IS SUBJECT TO CHANGE WITHOUT NOTICE. THE PRODUCTS DESCRIBED HEREIN AND THIS DOCUMENT ARE SUBJECT TO SPECIFIC DISCLAIMERS, SET FORTH AT www.vishay.com/doc?91000

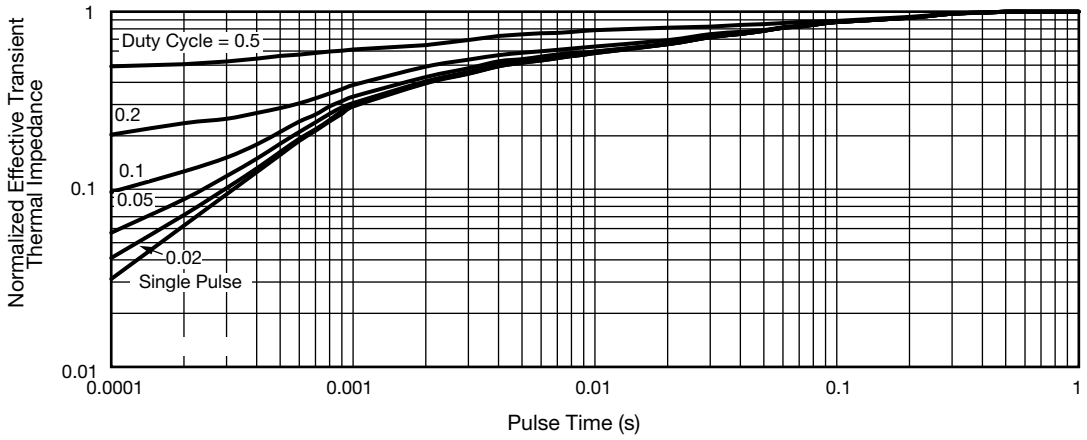


**Fig. 12 - Normalized Thermal Transient Impedance, Junction-to-Case**

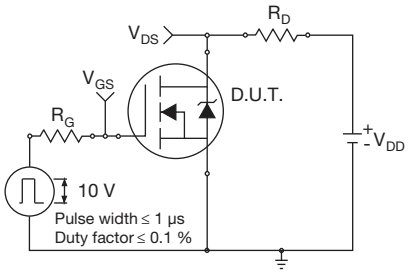


**Fig. 13 - Switching Time Test Circuit**

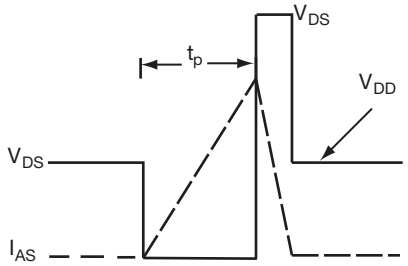


**Fig. 16 - Unclamped Inductive Waveforms**

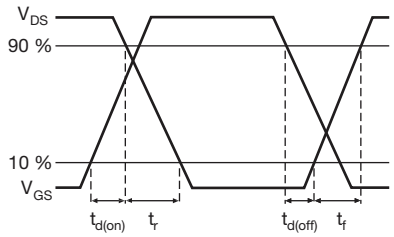


**Fig. 14 - Switching Time Waveforms**

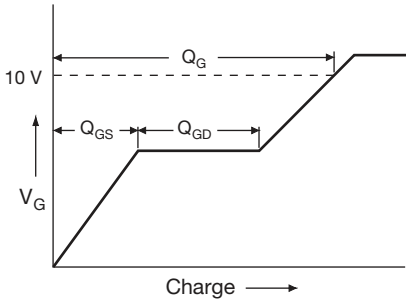


**Fig. 17 - Basic Gate Charge Waveform**

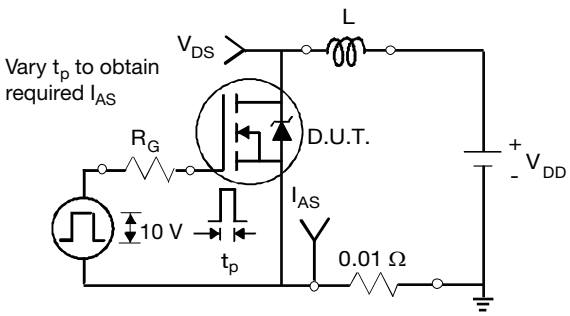


**Fig. 15 - Unclamped Inductive Test Circuit**

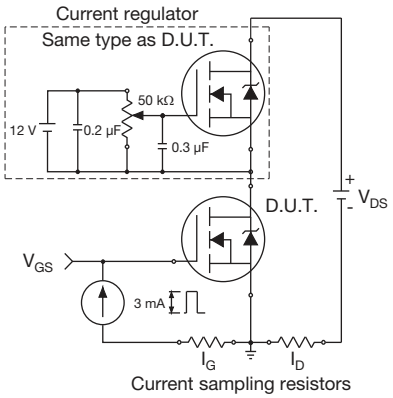


**Fig. 18 - Gate Charge Test Circuit**


For technical questions, contact: hvm@vishay.com
THIS DOCUMENT IS SUBJECT TO CHANGE WITHOUT NOTICE. THE PRODUCTS DESCRIBED HEREIN AND THIS DOCUMENT ARE SUBJECT TO SPECIFIC DISCLAIMERS, SET FORTH AT www.vishay.com/doc?91000

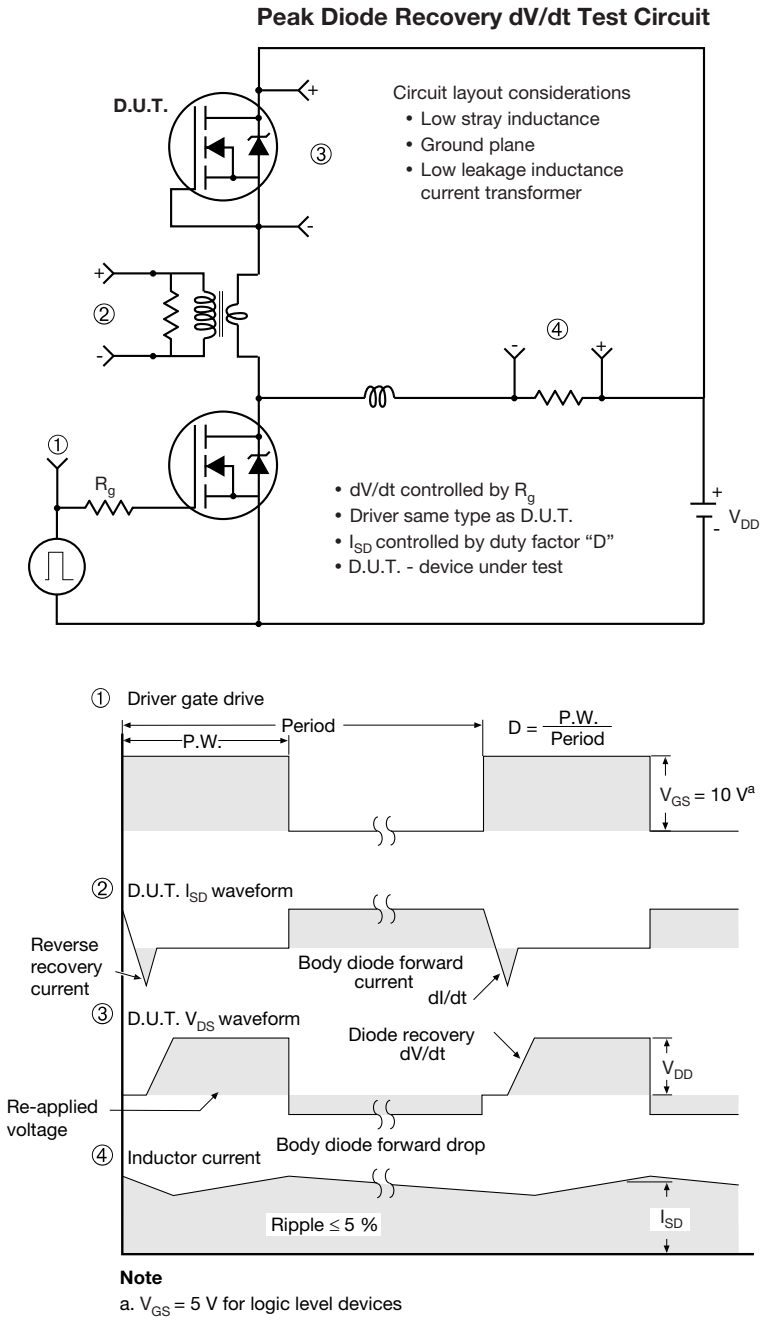


**Note**

a. $V_{GS}$ = 5 V for logic level devices

**Fig. 19 - For N-Channel**

*Vishay Siliconix maintains worldwide manufacturing capability. Products may be manufactured at one of several qualified locations. Reliability data for Silicon Technology and Package Reliability represent a composite of all qualified locations. For related documents such as package/tape drawings, part marking, and reliability data, see www.vishay.com/ppg?91511.*


For technical questions, contact: hvm@vishay.com
THIS DOCUMENT IS SUBJECT TO CHANGE WITHOUT NOTICE. THE PRODUCTS DESCRIBED HEREIN AND THIS DOCUMENT ARE SUBJECT TO SPECIFIC DISCLAIMERS, SET FORTH AT www.vishay.com/doc?91000

# Case Outline for TO-251AA (High Voltage)

## OPTION 1:

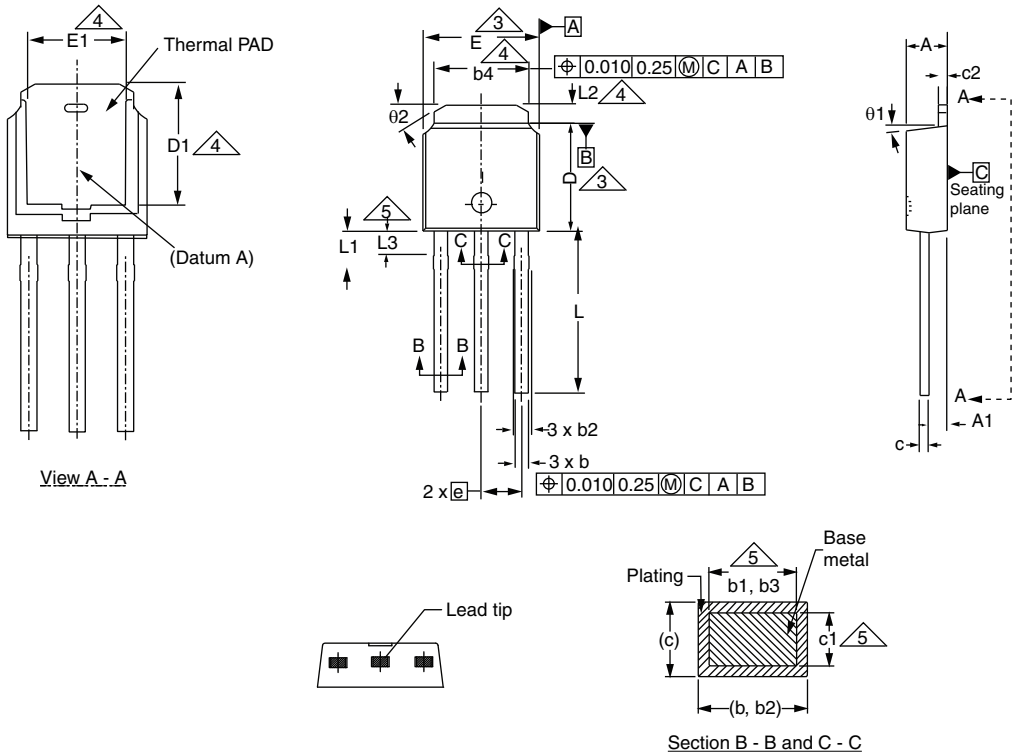


| | MILLIMETERS | | INCHES | |
|---|---|---|---|---|
| DIM. | MIN. | MAX. | MIN. | MAX. |
| A | 2.18 | 2.39 | 0.086 | 0.094 |
| A1 | 0.89 | 1.14 | 0.035 | 0.045 |
| b | 0.64 | 0.89 | 0.025 | 0.035 |
| b1 | 0.65 | 0.79 | 0.026 | 0.031 |
| b2 | 0.76 | 1.14 | 0.030 | 0.045 |
| b3 | 0.76 | 1.04 | 0.030 | 0.041 |
| b4 | 4.95 | 5.46 | 0.195 | 0.215 |
| c | 0.46 | 0.61 | 0.018 | 0.024 |
| c1 | 0.41 | 0.56 | 0.016 | 0.022 |
| c2 | 0.46 | 0.86 | 0.018 | 0.034 |
| D | 5.97 | 6.22 | 0.235 | 0.245 |

| | MILLIMETERS | | INCHES | |
|---|---|---|---|---|
| DIM. | MIN. | MAX. | MIN. | MAX. |
| D1 | 5.21 | - | 0.205 | - |
| E | 6.35 | 6.73 | 0.250 | 0.265 |
| E1 | 4.32 | - | 0.170 | - |
| e | 2.29 BSC | | 2.29 BSC | |
| L | 8.89 | 9.65 | 0.350 | 0.380 |
| L1 | 1.91 | 2.29 | 0.075 | 0.090 |
| L2 | 0.89 | 1.27 | 0.035 | 0.050 |
| L3 | 1.14 | 1.52 | 0.045 | 0.060 |
| θ1 | 0' | 15' | 0' | 15' |
| θ2 | 25' | 35' | 25' | 35' |

ECN: E21-0682-Rev. C, 27-Dec-2021
DWG: 5968

**Notes**

- Dimensioning and tolerancing per ASME Y14.5M-1994
- Dimension are shown in inches and millimeters
- Dimension D and E do not include mold flash. Mold flash shall not exceed 0.13 mm (0.005") per side. These dimensions are measured at the outermost extremes of the plastic body
- Thermal pad contour optional with dimensions b4, L2, E1 and D1
- Lead dimension uncontrolled in L3
- Dimension b1, b3 and c1 apply to base metal only
- Outline conforms to JEDEC® outline TO-251AA



For technical questions, contact: hvmos.techsupport@vishay.com

THIS DOCUMENT IS SUBJECT TO CHANGE WITHOUT NOTICE. THE PRODUCTS DESCRIBED HEREIN AND THIS DOCUMENT ARE SUBJECT TO SPECIFIC DISCLAIMERS, SET FORTH AT www.vishay.com/doc?91000

## OPTION 2: FACILITY CODE = N

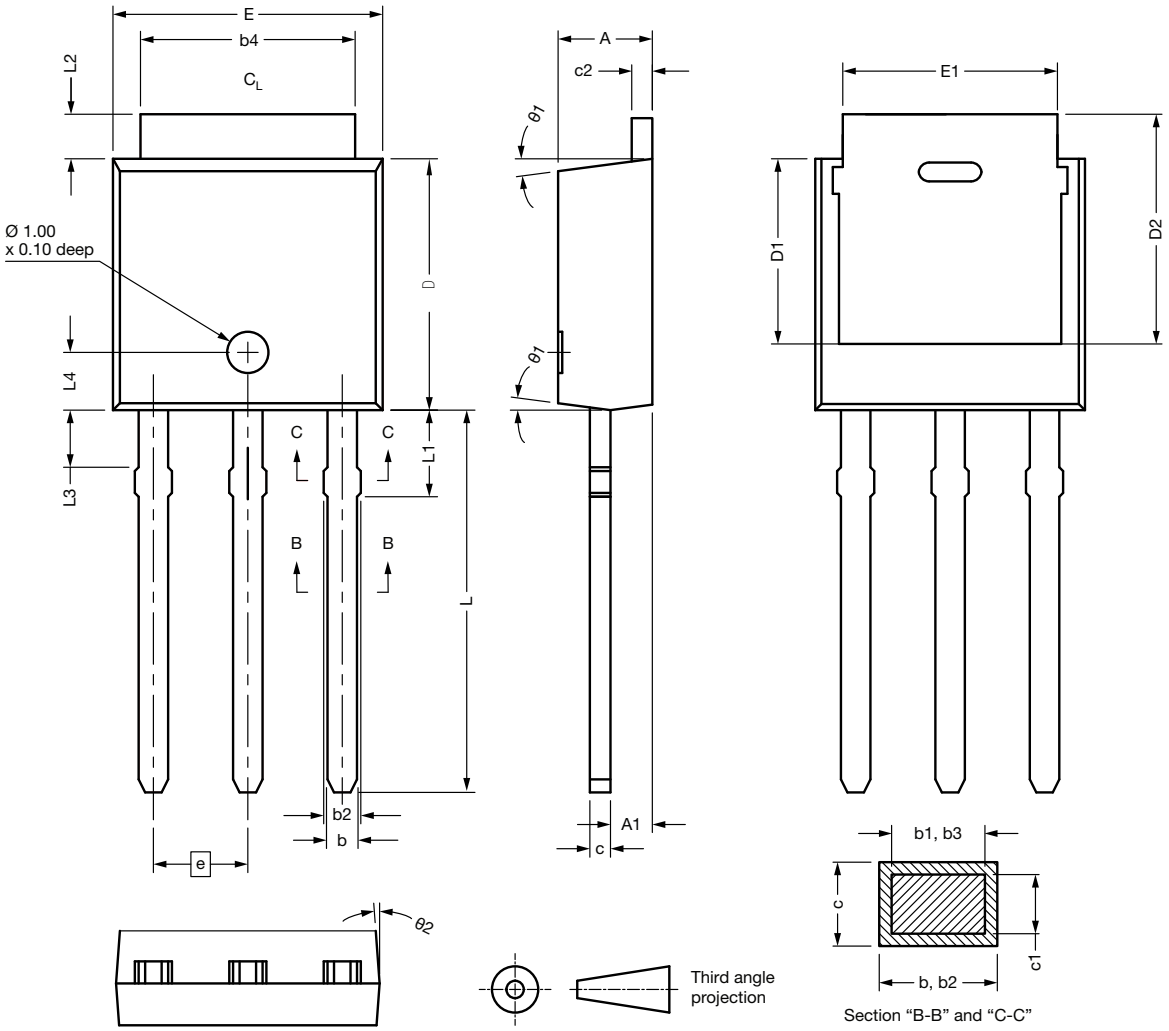


| DIM. | MIN. | NOM. | MAX. |
|---|---|---|---|
| A | 2.180 | 2.285 | 2.390 |
| A1 | 0.890 | 1.015 | 1.140 |
| b | 0.640 | 0.765 | 0.890 |
| b1 | 0.640 | 0.715 | 0.790 |
| b2 | 0.760 | 0.950 | 1.140 |
| b3 | 0.760 | 0.900 | 1.040 |
| b4 | 4.950 | 5.205 | 5.460 |
| c | 0.460 | - | 0.610 |
| c1 | 0.410 | - | 0.560 |
| c2 | 0.460 | - | 0.610 |
| D | 5.970 | 6.095 | 6.220 |
| D1 | 4.300 | - | - |

| DIM. | MIN. | NOM. | MAX. |
|---|---|---|---|
| D2 | 5.380 | - | - |
| E | 6.350 | 6.540 | 6.730 |
| E1 | 4.32 | - | - |
| e | 2.29 BSC | | |
| L | 8.890 | 9.270 | 9.650 |
| L1 | 1.910 | 2.100 | 2.290 |
| L2 | 0.890 | 1.080 | 1.270 |
| L3 | 1.140 | 1.330 | 1.520 |
| L4 | 1.300 | 1.400 | 1.500 |
| θ1 | 0° | 7.5° | 15° |
| θ2 | 4° | - | - |

ECN: E21-0682-Rev. C, 27-Dec-2021
DWG: 5968

**Notes**

- Dimensioning and tolerancing per ASME Y14.5M-1994
- All dimension are in millimeters, angles are in degrees
- Heat sink side flash is max. 0.8 mm



For technical questions, contact: hvmos.techsupport@vishay.com

THIS DOCUMENT IS SUBJECT TO CHANGE WITHOUT NOTICE. THE PRODUCTS DESCRIBED HEREIN AND THIS DOCUMENT ARE SUBJECT TO SPECIFIC DISCLAIMERS, SET FORTH AT www.vishay.com/doc?91000

## RECOMMENDED MINIMUM PADS FOR DPAK (TO-252)

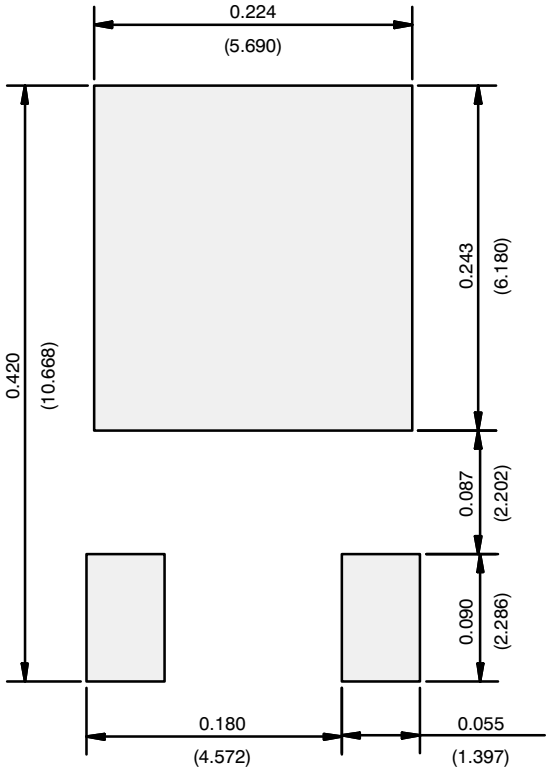


Recommended Minimum Pads
Dimensions in Inches/(mm)

Return to Index

APPLICATION NOTE

# Disclaimer

ALL PRODUCT, PRODUCT SPECIFICATIONS AND DATA ARE SUBJECT TO CHANGE WITHOUT NOTICE TO IMPROVE RELIABILITY, FUNCTION OR DESIGN OR OTHERWISE.

Vishay Intertechnology, Inc., its affiliates, agents, and employees, and all persons acting on its or their behalf (collectively, “Vishay”), disclaim any and all liability for any errors, inaccuracies or incompleteness contained in any datasheet or in any other disclosure relating to any product.

Vishay makes no warranty, representation or guarantee regarding the suitability of the products for any particular purpose or the continuing production of any product. To the maximum extent permitted by applicable law, Vishay disclaims (i) any and all liability arising out of the application or use of any product, (ii) any and all liability, including without limitation special, consequential or incidental damages, and (iii) any and all implied warranties, including warranties of fitness for particular purpose, non-infringement and merchantability.

Statements regarding the suitability of products for certain types of applications are based on Vishay's knowledge of typical requirements that are often placed on Vishay products in generic applications. Such statements are not binding statements about the suitability of products for a particular application. It is the customer's responsibility to validate that a particular product with the properties described in the product specification is suitable for use in a particular application. Parameters provided in datasheets and / or specifications may vary in different applications and performance may vary over time. All operating parameters, including typical parameters, must be validated for each customer application by the customer's technical experts. Product specifications do not expand or otherwise modify Vishay's terms and conditions of purchase, including but not limited to the warranty expressed therein.

Hyperlinks included in this datasheet may direct users to third-party websites. These links are provided as a convenience and for informational purposes only. Inclusion of these hyperlinks does not constitute an endorsement or an approval by Vishay of any of the products, services or opinions of the corporation, organization or individual associated with the third-party website. Vishay disclaims any and all liability and bears no responsibility for the accuracy, legality or content of the third-party website or for that of subsequent links.

Except as expressly indicated in writing, Vishay products are not designed for use in medical, life-saving, or life-sustaining applications or for any other application in which the failure of the Vishay product could result in personal injury or death. Customers using or selling Vishay products not expressly indicated for use in such applications do so at their own risk. Please contact authorized Vishay personnel to obtain written terms and conditions regarding products designed for such applications.

No license, express or implied, by estoppel or otherwise, to any intellectual property rights is granted by this document or by any conduct of Vishay. Product names and markings noted herein may be trademarks of their respective owners.

*© 2024 VISHAY INTERTECHNOLOGY, INC. ALL RIGHTS RESERVED*