Recommended Land Pattern PowerPAK® MLP55-32L

Component for MLP55-32L
Top side transparent view
(no bottom view)

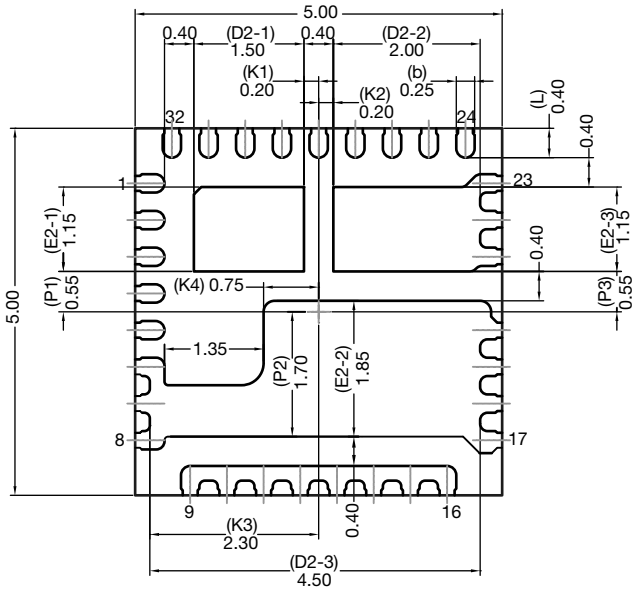

Land pattern for MLP55-32L

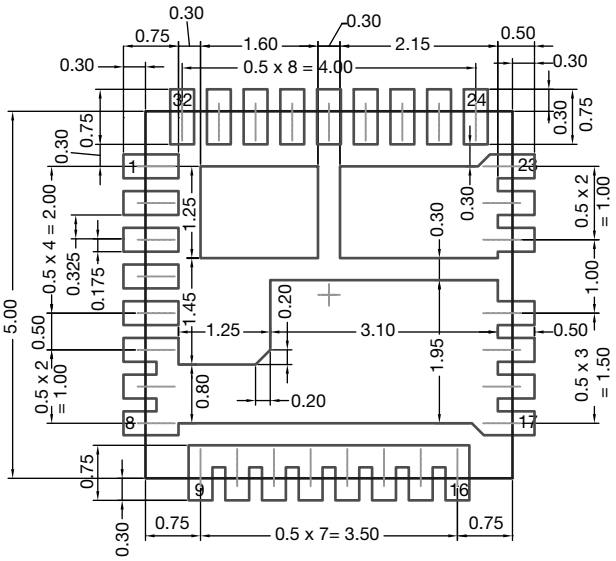

Component and land pattern
for MLP55-32L

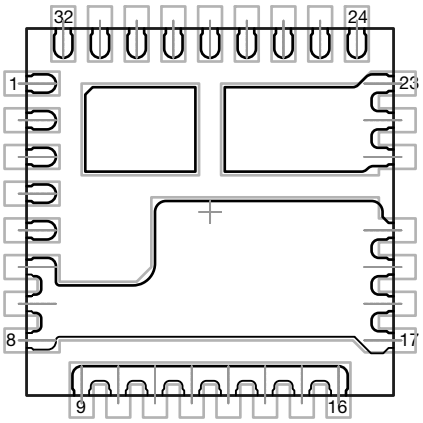

Component for MLP55-32L

Land pattern for MLP55-32L

All dimensions are in millimeters

For technical questions, contact: powerictechsupport@vishay.com

THIS DOCUMENT IS SUBJECT TO CHANGE WITHOUT NOTICE. THE PRODUCTS DESCRIBED HEREIN AND THIS DOCUMENT ARE SUBJECT TO SPECIFIC DISCLAIMERS, SET FORTH AT www.vishay.com/doc?91000