DC Film Capacitor
MKT Radial Lacquered Type

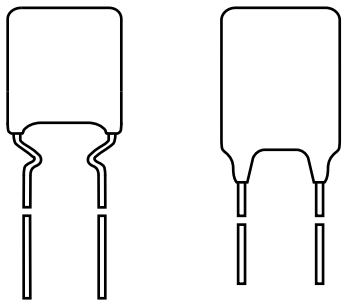

FEATURES

- Available taped and loose in box
- Material categorization:
  for definitions of compliance please see www.vishay.com/doc?99912

Pb-free

RoHS COMPLIANT

APPLICATIONS

Blocking and coupling, bypass and energy reservoir.

QUICK REFERENCE DATA	
Capacitance range (E12 series)	**366:** 0.0033 µF to 1.0 µF **367:** 0.0033 µF to 1.0 µF
Capacitance tolerance	± 10 %, ± 5 %
Climatic testing class according to IEC 60068-1	55/105/56
Maximum application temperature	105 °C
Reference specifications	IEC 60384-2
Dielectric	Polyester film
Electrodes	Metallized
Construction	Mono construction
Encapsulation	Flame retardant epoxy material UL-class 94 V-0
Leads	Tinned wire
Marking	C-value; rated voltage; tolerance
Rated temperature	85 °C
Rated (DC) voltage	63 V_{DC}, 100 V_{DC}, 250 V_{DC}, 400 V_{DC}
Rated (AC) voltage	40 V_{AC}, 63 V_{AC}, 160 V_{AC}, 220 V_{AC}

Note

- For more detailed data and test requirements, contact dc-film@vishay.com

DIMENSIONS in millimeters

MKT366 KINKED LEADS

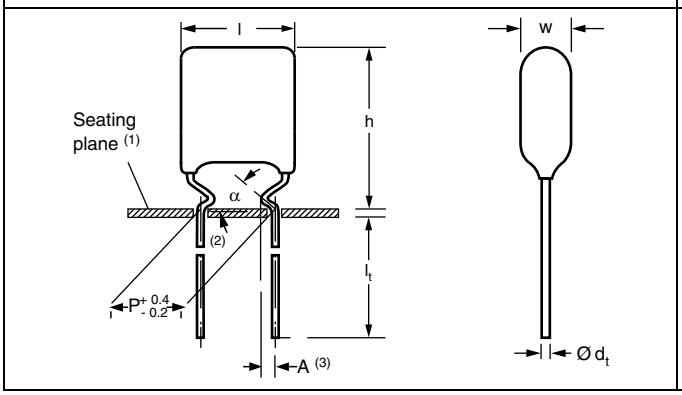

MKT367 STRAIGHT LEADS

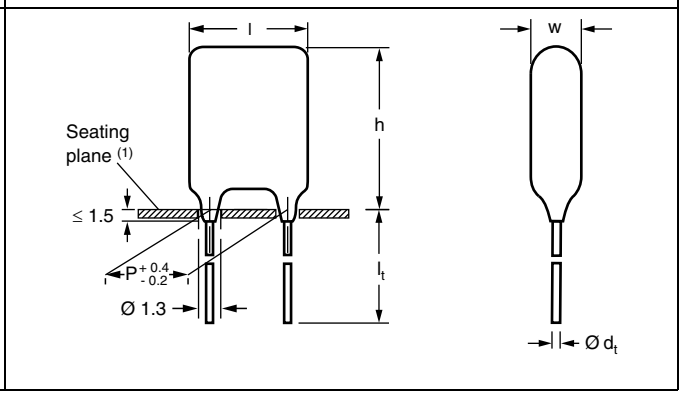

Notes

(1) Hole Ø 1.0 for d_t = 0.5 mm
(2) $0 \leq \alpha < 50°$
(3) A = 1.7 mm ± 0.3 mm

For technical questions, contact: dc-film@vishay.com
THIS DOCUMENT IS SUBJECT TO CHANGE WITHOUT NOTICE. THE PRODUCTS DESCRIBED HEREIN AND THIS DOCUMENT ARE SUBJECT TO SPECIFIC DISCLAIMERS, SET FORTH AT www.vishay.com/doc?91000

COMPOSITION OF CATALOG NUMBER: MKT366

TYPE AND PITCHES	
366	7.5 mm

CAPACITANCE (numerically)

MULTIPLIER (nF)	
0.1	2
1	3
10	4
100	5

Example:
104 = 10 x 10 = 100 nF

BFC2	366	XX	YY	Y
2222 (*)	366	XX	YY	Y

(*) Old ordering number

TYPE	PACKAGING	LEAD CONFIGURATION	PREFERRED TYPES				
			C-TOL.	63 V	100 V	250 V	400 V
Pitch = 7.5 mm							
366	Loose in box	Kinked; Lead length 4.0 mm + 1.0 mm /- 0.5 mm	± 10 %	15	25	45	55
			± 5 %	16	26	46	56
		Kinked; Lead length 17.0 mm ± 4.0 mm	± 10 %	11	21	41	51
			± 5 %	12	22	42	52
	Ammopack (1)	Kinked; H = 16.0 mm; P_0 = 12.7 mm	± 10 %	13	23	43	53
			± 5 %	17	27	47	57

Note

- For detailed tape specifications refer to packaging information: www.vishay.com/doc?28139

SPECIFIC REFERENCE DATA: MKT366

DESCRIPTION	VALUE			
Tangent of loss angle:	at 1 kHz	at 10 kHz	at 100 kHz	
C ≤ 0.47 µF	≤ 75 x 10^{-4}	≤ 130 x 10^{-4}	≤ 225 x 10^{-4}	
C > 0.47 µF	≤ 75 x 10^{-4}	≤ 130 x 10^{-4}	-	
Rated voltage pulse slope $(dU/dt)_R$ at	63 V_{DC}	100 V_{DC}	250 V_{DC}	400 V_{DC}
	110 V/µs	110 V/µs	130 V/µs	170 V/µs
R between leads, for C ≤ 0.33 µF at 10 V; 1 min at 100 V; 1 min	> 15 000 MΩ	> 15 000 MΩ	> 30 000 MΩ	> 30 000 MΩ
RC between leads, for C > 0.33 µF at 10 V; 1 min	> 5000 s		-	
R between interconnecting leads and casing, 100 V; 1 min	> 30 000 MΩ			
Withstanding (DC) voltage (cut off current 10 mA) (1); rise time ≤ 1000 V/s	100 V; 1 min	160 V; 1 min	400 V; 1 min	640 V; 1 min
Maximum application temperature	105 °C			

Note

(1) See "Voltage Proof Test for Metallized Film Capacitors": www.vishay.com/doc?28169

THIS DOCUMENT IS SUBJECT TO CHANGE WITHOUT NOTICE. THE PRODUCTS DESCRIBED HEREIN AND THIS DOCUMENT ARE SUBJECT TO SPECIFIC DISCLAIMERS, SET FORTH AT www.vishay.com/doc?91000

ELECTRICAL DATA AND ORDERING INFORMATION: MKT366

U_{RDC} (V)	CAP. (µF)	DIMENSIONS $w_{max.}$ x $h_{max.}$ x $l_{max.}$ (mm)	MASS (g) [1]	CATALOG NUMBER BFC2 366 XXYYY AND PACKAGING						
				LOOSE IN BOX				AMMOPACK		C-VALUE
				l_t = 4.0 mm + 1.0 mm / - 0.5 mm		l_t = 17.0 mm ± 4.0 mm		H = 16.0 mm		
				C-TOL. = ± 10 %	C-TOL. = ± 5 %	C-TOL. = ± 10 %	C-TOL. = ± 5 %	C-TOL. = ± 10 %	C-TOL. = ± 5 %	
				XX (SPQ)	XX (SPQ)	XX (SPQ)	XX (SPQ)	XX (SPQ)	XX (SPQ)	..YYY
63	PITCH = 7.5 mm + 0.4 mm / - 0.2 mm; d_t = 0.60 mm ± 0.06 mm (U_{RAC} = 40 V)									
	0.12 0.15 0.18 0.22	4.0 x 12.0 x 10.0	0.30	**15...** (1000)	**16...** (1000)	**11...** (1000)	**12...** (1000)	**13...** (1500)	**17...** (1500)	**124** **154** **184** **224**
	0.27	4.5 x 13.0 x 10.5	0.38	**15...** (1000)	**16...** (1000)	**11...** (1000)	**12...** (1000)	**13...** (1250)	**17...** (1250)	**274**
	0.33 0.39	5.0 x 13.5 x 10.5	0.43	**15...** (1000)	**16...** (1000)	**11...** (1000)	**12...** (1000)	**13...** (1000)	**17...** (1000)	**334** **394**
	0.47	5.5 x 14.0 x 10.5	0.53	**15...** (1000)	**16...** (1000)	**11...** (1000)	**12...** (1000)	**13...** (1000)	**17...** (1000)	**474**
	0.56 0.68 0.82 1.0	5.5 x 14.5 x 10.5	0.54	**15...** (1000)	**16...** (1000)	**11...** (1000)	**12...** (1000)	**13...** (1000)	**17...** (1000)	**564** **684** **824** **105**
100	PITCH = 7.5 mm + 0.4 mm / - 0.2 mm; d_t = 0.60 mm ± 0.06 mm (U_{RAC} = 63 V)									
	0.039 0.047 0.056 0.068 0.082	4.0 x 12.0 x 10.0	0.30	**25...** (1000)	**26...** (1000)	**21...** (1000)	**22...** (1000)	**23...** (1500)	**27...** (1500)	**393** **473** **563** **683** **823**
	0.10	4.0 x 13.0 x 10.0	0.26	**25...** (1000)	**26...** (1000)	**21...** (1000)	**22...** (1000)	**23...** (1500)	**27...** (1500)	**104**
	0.12	4.5 x 13.0 x 10.5	0.38	**25...** (1000)	**26...** (1000)	**21...** (1000)	**22...** (1000)	**23...** (1250)	**27...** (1250)	**124**
	0.15	5.0 x 13.0 x 15.0	0.40	**25...** (1000)	**26...** (1000)	**21...** (1000)	**22...** (1000)	**23...** (1000)	**27...** (1000)	**154**
	0.18	5.0 x 13.5 x 10.5	0.43	**25...** (1000)	**26...** (1000)	**21...** (1000)	**22...** (1000)	**23...** (1000)	**27...** (1000)	**184**
	0.22	5.5 x 13.5 x 10.5	0.50	**25...** (1000)	**26...** (1000)	**21...** (1000)	**22...** (1000)	**23...** (1000)	**27...** (1000)	**224**
	0.27	6.0 x 14.5 x 10.5	0.55	**25...** (1000)	**26...** (1000)	**21...** (1000)	**22...** (1000)	**23...** (1000)	**27...** (1000)	**274**
	0.33 0.39 0.47	6.0 x 15.0 x 10.5	0.58	**25...** (1000)	**26...** (1000)	**21...** (1000)	**22...** (1000)	**23...** (1000)	**27...** (1000)	**334** **394** **474**

Notes

- SPQ = Standard Packing Quantity

(1) Net weight for short lead products only

For technical questions, contact: dc-film@vishay.com
THIS DOCUMENT IS SUBJECT TO CHANGE WITHOUT NOTICE. THE PRODUCTS DESCRIBED HEREIN AND THIS DOCUMENT ARE SUBJECT TO SPECIFIC DISCLAIMERS, SET FORTH AT www.vishay.com/doc?91000

ELECTRICAL DATA AND ORDERING INFORMATION: MKT366

U_{RDC} (V)	CAP. (µF)	DIMENSIONS $w_{max.}$ x $h_{max.}$ x $l_{max.}$ (mm)	MASS (g) [1]	CATALOG NUMBER BFC2 366 XXYYY AND PACKAGING						C-VALUE
				LOOSE IN BOX				AMMOPACK		
				l_t = 4.0 mm + 1.0 mm / - 0.5 mm		l_t = 17.0 mm ± 4.0 mm		H = 16.0 mm		
				C-TOL. = ± 10 %	C-TOL. = ± 5 %	C-TOL. = ± 10 %	C-TOL. = ± 5 %	C-TOL. = ± 10 %	C-TOL. = ± 5 %	
				XX (SPQ)	XX (SPQ)	XX (SPQ)	XX (SPQ)	XX (SPQ)	XX (SPQ)	..YYY
250	PITCH = 7.5 mm + 0.4 mm / - 0.2 mm; d_t = 0.60 mm ± 0.06 mm (U_{RAC} = 160 V)									
	0.018 0.022 0.027 0.033 0.039 0.047	4.0 x 13.0 x 10.0	0.26	**45...** (1000)	**46...** (1000)	**41...** (1000)	**42...** (1000)	**43...** (1500)	**47...** (1500)	**183** **223** **273** **333** **393** **473**
	0.056	4.0 x 14.0 x 10.0	0.35	**45...** (1000)	**46...** (1000)	**41...** (1000)	**42...** (1000)	**43...** (1500)	**47...** (1500)	**563**
	0.068	4.5 x 14.0 x 10.0	0.39	**45...** (1000)	**46...** (1000)	**41...** (1000)	**42...** (1000)	**43...** (1250)	**47...** (1250)	**683**
	0.082	4.5 x 13.0 x 10.0	0.38	**45...** (1000)	**46...** (1000)	**41...** (1000)	**42...** (1000)	**43...** (1250)	**47...** (1250)	**823**
	0.10	5.0 x 13.5 x 10.0	0.40	**45...** (1000)	**46...** (1000)	**41...** (1000)	**42...** (1000)	**43...** (1000)	**47...** (1000)	**104**
	0.12	5.5 x 14.0 x 10.0	0.50	**45...** (1000)	**46...** (1000)	**41...** (1000)	**42...** (1000)	**43...** (1000)	**47...** (1000)	**124**
	0.15	5.5 x 15.5 x 10.0	0.58	**45...** (1000)	**46...** (1000)	**41...** (1000)	**42...** (1000)	**43...** (1000)	**47...** (1000)	**154**
400	PITCH = 7.5 mm + 0.4 mm / - 0.2 mm; d_t = 0.60 mm ± 0.06 mm (U_{RAC} = 220 V)									
	0.0033 0.0039 0.0047	4.0 x 12.0 x 10.0	0.30	**55...** (1000)	**56...** (1000)	**51...** (1000)	**52...** (1000)	**53...** (1500)	**57...** (1500)	**332** **392** **472**
	0.0056 0.0068 0.0082 0.010 0.012 0.015	4.0 x 13.0 x 10.0	0.26	**55...** (1000)	**56...** (1000)	**51...** (1000)	**52...** (1000)	**53...** (1500)	**57...** (1500)	**562** **682** **822** **103** **123** **153**
	0.018	4.0 x 13.5 x 10.0	0.35	**55...** (1000)	**56...** (1000)	**51...** (1000)	**52...** (1000)	**53...** (1250)	**57...** (1250)	**183**
	0.022	5.0 x 14.0 x 10.0	0.45	**55...** (1000)	**56...** (1000)	**51...** (1000)	**52...** (1000)	**53...** (1000)	**57...** (1000)	**223**
	0.027	4.0 x 12.5 x 10.0	0.35	**55...** (1000)	**56...** (1000)	**51...** (1000)	**52...** (1000)	**53...** (1500)	**57...** (1500)	**273**
	0.033	4.5 x 13.0 x 10.0	0.38	**55...** (1000)	**56...** (1000)	**51...** (1000)	**52...** (1000)	**53...** (1250)	**57...** (1250)	**333**
	0.039 0.047	5.0 x 13.5 x 10.0	0.40	**55...** (1000)	**56...** (1000)	**51...** (1000)	**52...** (1000)	**53...** (1000)	**57...** (1000)	**393** **473**
	0.056	5.5 x 14.0 x 10.0	0.50	**55...** (1000)	**56...** (1000)	**51...** (1000)	**52...** (1000)	**53...** (1000)	**57...** (1000)	**563**

Notes

- SPQ = Standard Packing Quantity

(1) Net weight for short lead products only

For technical questions, contact: dc-film@vishay.com
THIS DOCUMENT IS SUBJECT TO CHANGE WITHOUT NOTICE. THE PRODUCTS DESCRIBED HEREIN AND THIS DOCUMENT ARE SUBJECT TO SPECIFIC DISCLAIMERS, SET FORTH AT www.vishay.com/doc?91000

COMPOSITION OF CATALOG NUMBER: MKT367

TYPE AND PITCHES	
367	7.5 mm

CAPACITANCE (numerically)

MULTIPLIER (nF)	
0.1	2
1	3
10	4
100	5

Example:
104 = 10 x 10 = 100 nF

BFC2	367	XX	YY	Y
2222 (*)	367	XX	YY	Y

(*) Old ordering number

TYPE	PACKAGING	LEAD CONFIGURATION	PREFERRED TYPES				
			C-TOL.	63 V	100 V	250 V	400 V
Pitch = 7.5 mm							
367	Loose in box	Straight; Lead length 4.0 mm + 1.0 mm /- 0.5 mm	± 10 %	15	25	45	55
			± 5 %	16	26	46	56
		Straight; Lead length 22.0 mm ± 4.0 mm	± 10 %	11	21	41	51
			± 5 %	12	22	42	52
	Ammopack [1]	Straight; H = 18.5 mm; P_0 = 12.7 mm	± 10 %	13	23	43	53
			± 5 %	17	27	47	57

Note

- For detailed tape specifications refer to packaging information: www.vishay.com/doc?28139

SPECIFIC REFERENCE DATA: MKT367

DESCRIPTION	VALUE			
Tangent of loss angle:	at 1 kHz	at 10 kHz	at 100 kHz	
C ≤ 0.47 µF	≤ 75 x 10^{-4}	≤ 130 x 10^{-4}	≤ 225 x 10^{-4}	
C > 0.47 µF	≤ 75 x 10^{-4}	≤ 130 x 10^{-4}	-	
Rated voltage pulse slope $(dU/dt)_R$ at	63 V_{DC}	100 V_{DC}	250 V_{DC}	400 V_{DC}
	110 V/µs	110 V/µs	130 V/µs	170 V/µs
R between leads, for C ≤ 0.33 µF at 10 V; 1 min at 100 V; 1 min	> 15 000 MΩ	> 15 000 MΩ	> 30 000 MΩ	> 30 000 MΩ
RC between leads, for C > 0.33 µF at 10 V; 1 min	> 5000 s		-	
R between interconnecting leads and casing, 100 V; 1 min	> 30 000 MΩ			
Withstanding (DC) voltage (cut off current 10 mA) [1]; rise time ≤ 1000 V/s	100 V; 1 min	160 V; 1 min	400 V; 1 min	640 V; 1 min
Maximum application temperature	105 °C			

Note

[1] See "Voltage Proof Test for Metallized Film Capacitors": www.vishay.com/doc?28169

For technical questions, contact: dc-film@vishay.com
THIS DOCUMENT IS SUBJECT TO CHANGE WITHOUT NOTICE. THE PRODUCTS DESCRIBED HEREIN AND THIS DOCUMENT ARE SUBJECT TO SPECIFIC DISCLAIMERS, SET FORTH AT www.vishay.com/doc?91000

ELECTRICAL DATA AND ORDERING INFORMATION: MKT367

U_{RDC} (V)	CAP. (µF)	DIMENSIONS $w_{max.}$ x $h_{max.}$ x $l_{max.}$ (mm)	MASS (g) [1]	CATALOG NUMBER BFC2 367 XXYYY AND PACKAGING						
				LOOSE IN BOX				AMMOPACK		C-VALUE
				l_t = 4.0 mm + 1.0 mm / - 0.5 mm		l_t = 22.0 mm ± 4.0 mm		H = 18.5 mm		
				C-TOL. = ± 10 %	C-TOL. = ± 5 %	C-TOL. = ± 10 %	C-TOL. = ± 5 %	C-TOL. = ± 10 %	C-TOL. = ± 5 %	
				XX (SPQ)	XX (SPQ)	XX (SPQ)	XX (SPQ)	XX (SPQ)	XX (SPQ)	..YYY
63	PITCH = 7.5 mm + 0.4 mm / - 0.2 mm; d_t = 0.60 mm ± 0.06 mm (U_{RAC} = 40 V)									
	0.12	4.0 x 9.5 x 10.0	0.23	15... (1000)	16... (1000)	11... (1000)	12... (1000)	13... (1500)	17... (1500)	124
	0.15									154
	0.18									184
	0.22									224
	0.27	4.5 x 10.0 x 10.5	0.37	15... (1000)	16... (1000)	11... (1000)	12... (1000)	13... (1000)	17... (1000)	274
	0.33	5.0 x 10.5 x 10.5	0.39	15... (1000)	16... (1000)	11... (1000)	12... (1000)	13... (1000)	17... (1000)	334
	0.39									394
	0.47	5.5 x 11.0 x 10.5	0.44	15... (1000)	16... (1000)	11... (1000)	12... (1000)	13... (1000)	17... (1000)	474
	0.56	5.5 x 12.0 x 10.5	0.46	15... (1000)	16... (1000)	11... (1000)	12... (1000)	13... (1000)	17... (1000)	564
	0.68									684
	0.82									824
	1.0									105
100	PITCH = 7.5 mm + 0.4 mm / - 0.2 mm; d_t = 0.60 mm ± 0.06 mm (U_{RAC} = 63 V)									
	0.039	4.0 x 9.5 x 10.0	0.23	25... (1000)	26... (1000)	21... (1000)	22... (1000)	23... (1500)	27... (1500)	393
	0.047									473
	0.056									563
	0.068									683
	0.082									823
	0.10									104
	0.12	4.5 x 10.0 x 10.5	0.37	25... (1000)	26... (1000)	21... (1000)	22... (1000)	23... (1000)	27... (1000)	124
	0.15	5.0 x 10.5 x 10.5	0.39	25... (1000)	26... (1000)	21... (1000)	22... (1000)	23... (1000)	27... (1000)	154
	0.18									184
	0.22	5.5 x 11.5 x 10.5	0.44	25... (1000)	26... (1000)	21... (1000)	22... (1000)	23... (1000)	27... (1000)	224
	0.27	6.0 x 12.5 x 10.5	0.55	25... (1000)	26... (1000)	21... (1000)	22... (1000)	23... (1000)	27... (1000)	274
	0.33									334
	0.39									394
	0.47									474

Notes

- SPQ = Standard Packing Quantity

[1] Net weight for short lead products only

For technical questions, contact: dc-film@vishay.com
THIS DOCUMENT IS SUBJECT TO CHANGE WITHOUT NOTICE. THE PRODUCTS DESCRIBED HEREIN AND THIS DOCUMENT ARE SUBJECT TO SPECIFIC DISCLAIMERS, SET FORTH AT www.vishay.com/doc?91000

ELECTRICAL DATA AND ORDERING INFORMATION: MKT367

U_{RDC} (V)	CAP. (µF)	DIMENSIONS $w_{max.}$ x $h_{max.}$ x $l_{max.}$ (mm)	MASS (g) [1]	CATALOG NUMBER BFC2 367 XXYYY AND PACKAGING						
				LOOSE IN BOX				AMMOPACK		C-VALUE
				l_t = 4.0 mm + 1.0 mm / - 0.5 mm		l_t = 22.0 mm ± 4.0 mm		H = 18.5 mm		
				C-TOL. = ± 10 %	C-TOL. = ± 5 %	C-TOL. = ± 10 %	C-TOL. = ± 5 %	C-TOL. = ± 10 %	C-TOL. = ± 5 %	
				XX (SPQ)	XX (SPQ)	XX (SPQ)	XX (SPQ)	XX (SPQ)	XX (SPQ)	..YYY
250	PITCH = 7.5 mm + 0.4 mm / - 0.2 mm; d_t = 0.60 mm ± 0.06 mm (U_{RAC} = 160 V)									
	0.018	4.0 x 9.5 x 10.0	0.23	45... (1000)	46... (1000)	41... (1000)	42... (1000)	43... (1500)	47... (1500)	183
	0.022									223
	0.027									273
	0.033									333
	0.039									393
	0.047									473
	0.056									563
	0.068	4.5 x 10.0 x 10.0	0.37	45... (1000)	46... (1000)	41... (1000)	42... (1000)	43... (1000)	47... (1000)	683
	0.082									823
	0.10	5.0 x 10.5 x 10.0	0.39	45... (1000)	46... (1000)	41... (1000)	42... (1000)	43... (1000)	47... (1000)	104
	0.12	5.5 x 11.0 x 10.0	0.42	45... (1000)	46... (1000)	41... (1000)	42... (1000)	43... (1000)	47... (1000)	124
	0.15	5.5 x 12.5 x 10.0	0.48	45... (1000)	46... (1000)	41... (1000)	42... (1000)	43... (1000)	47... (1000)	154
400	PITCH = 7.5 mm + 0.4 mm / - 0.2 mm; d_t = 0.60 mm ± 0.06 mm (U_{RAC} = 220 V)									
	0.0033	4.0 x 9.5 x 10.0	0.23	55... (1000)	56... (1000)	51... (1000)	52... (1000)	53... (1500)	57... (1500)	332
	0.0039									392
	0.0047									472
	0.0056									562
	0.0068									682
	0.0082									822
	0.010									103
	0.012									123
	0.015									153
	0.018	4.5 x 10.0 x 10.0	0.37	55... (1000)	56... (1000)	51... (1000)	52... (1000)	53... (1000)	57... (1000)	183
	0.022	5.0 x 10.5 x 10.0	0.39	55... (1000)	56... (1000)	51... (1000)	52... (1000)	53... (1000)	57... (1000)	223
	0.027	4.0 x 9.5 x 10.0	0.23	55... (1000)	56... (1000)	51... (1000)	52... (1000)	53... (1500)	57... (1500)	273
	0.033	4.5 x 10.0 x 10.0	0.37	55... (1000)	56... (1000)	51... (1000)	52... (1000)	53... (1000)	57... (1000)	333
	0.039	5.0 x 10.5 x 10.0	0.39	55... (1000)	56... (1000)	51... (1000)	52... (1000)	53... (1000)	57... (1000)	393
	0.047									473
	0.056	5.5 x 11.0 x 10.0	0.42	55... (1000)	56... (1000)	51... (1000)	52... (1000)	53... (1000)	57... (1000)	563

Notes

- SPQ = Standard Packing Quantity

(1) Net weight for short lead products only

For technical questions, contact: dc-film@vishay.com
THIS DOCUMENT IS SUBJECT TO CHANGE WITHOUT NOTICE. THE PRODUCTS DESCRIBED HEREIN AND THIS DOCUMENT ARE SUBJECT TO SPECIFIC DISCLAIMERS, SET FORTH AT www.vishay.com/doc?91000

MOUNTING

Normal Use

The capacitors are designed for mounting on printed-circuit boards. The capacitors packed in bandoliers are designed for mounting in printed-circuit boards by means of automatic insertion machines.

For detailed tape specifications refer to packaging information: www.vishay.com/doc?28139

Specific Method of Mounting to Withstand Vibration and Shock

In order to withstand vibration and shock tests, it must be ensured that the underside and the kinks are in good contact with the printed-circuit board.

- For pitches ≤ 15 mm capacitors shall be mechanically fixed by the leads
- For larger pitches the capacitors shall be mounted in the same way and the body clamped

SOLDERING CONDITIONS

For general soldering conditions and wave soldering profile, we refer to the application note:
"**Soldering Guidelines for Film Capacitors**": www.vishay.com/doc?28171

Storage Temperature

T_{stg} = -25 °C to +35 °C with RH maximum 75 % without condensation

Ratings and Characteristics Reference Conditions

Unless otherwise specified, all electrical values apply to an ambient free air temperature of 23 °C ± 1 °C, an atmospheric pressure of 86 kPa to 106 kPa and a relative humidity of 50 % ± 2 %.

For reference testing, a conditioning period shall be applied over 96 h ± 4 h by heating the products in a circulating air oven at the rated temperature and a relative humidity not exceeding 20 %.

THIS DOCUMENT IS SUBJECT TO CHANGE WITHOUT NOTICE. THE PRODUCTS DESCRIBED HEREIN AND THIS DOCUMENT ARE SUBJECT TO SPECIFIC DISCLAIMERS, SET FORTH AT www.vishay.com/doc?91000

CHARACTERISTICS

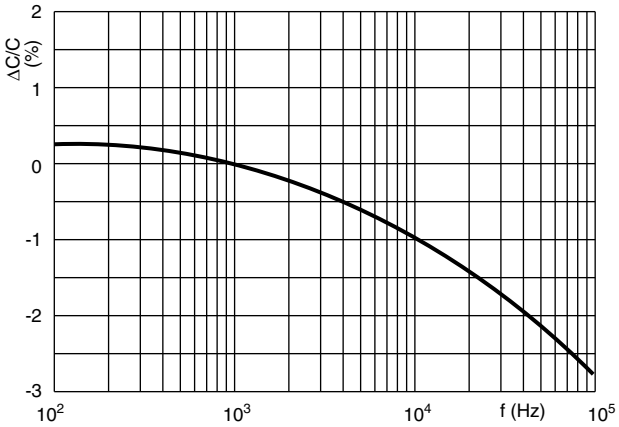

Capacitance as a function of frequency
(typical curve)

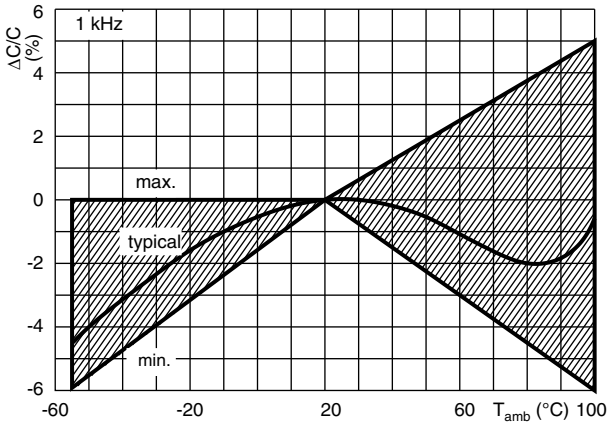

Capacitance as a function of ambient temperature
(typical curve)

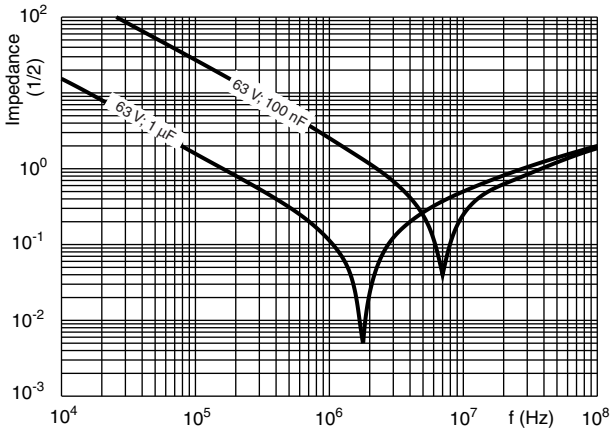

Impedance as a function of frequency
(typical curve)

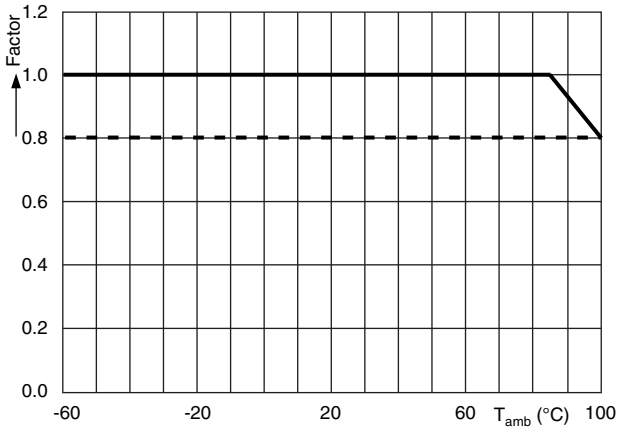

Max. DC and AC voltage as a function of temperature

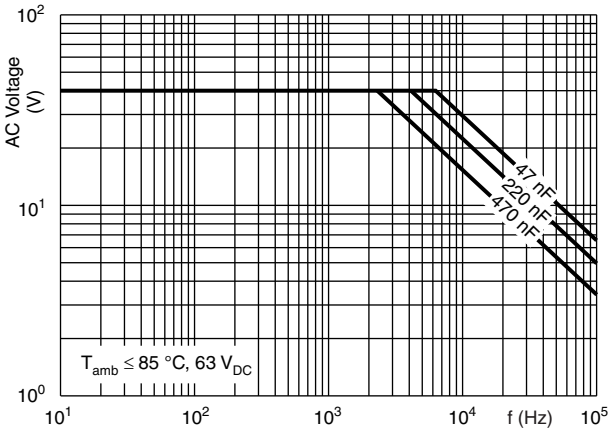

Max. RMS voltage as a function of frequency

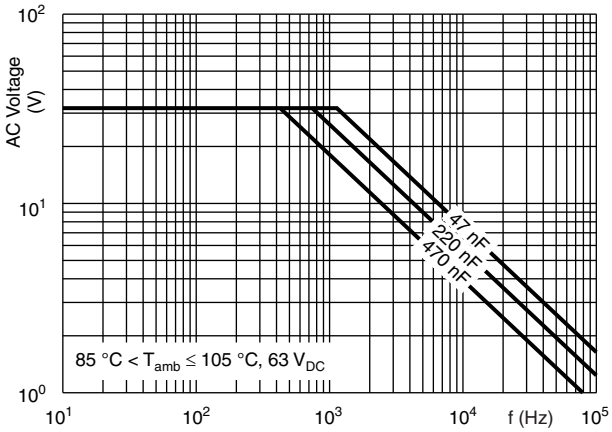

Max. RMS voltage as a function of frequency

For technical questions, contact: dc-film@vishay.com
THIS DOCUMENT IS SUBJECT TO CHANGE WITHOUT NOTICE. THE PRODUCTS DESCRIBED HEREIN AND THIS DOCUMENT ARE SUBJECT TO SPECIFIC DISCLAIMERS, SET FORTH AT www.vishay.com/doc?91000

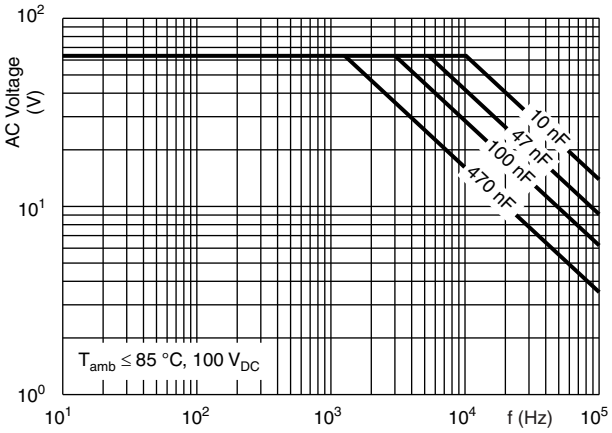

Max. RMS voltage as a function of frequency

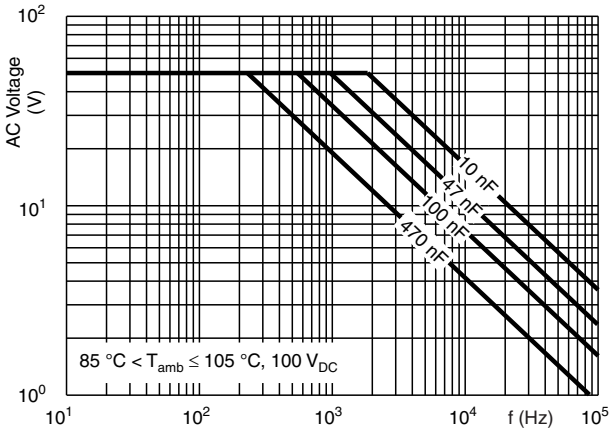

Max. RMS voltage as a function of frequency

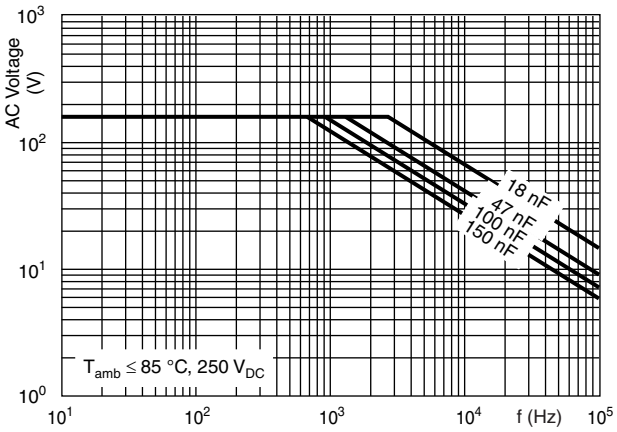

Max. RMS voltage as a function of frequency

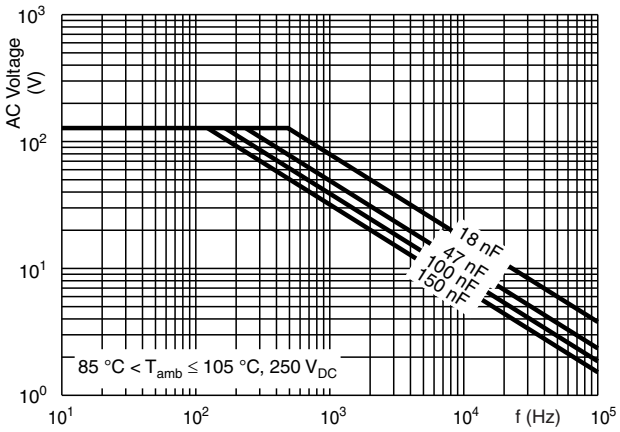

Max. RMS voltage as a function of frequency

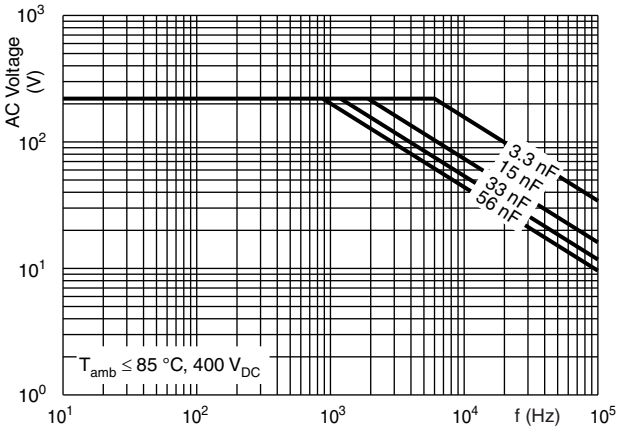

Max. RMS voltage as a function of frequency

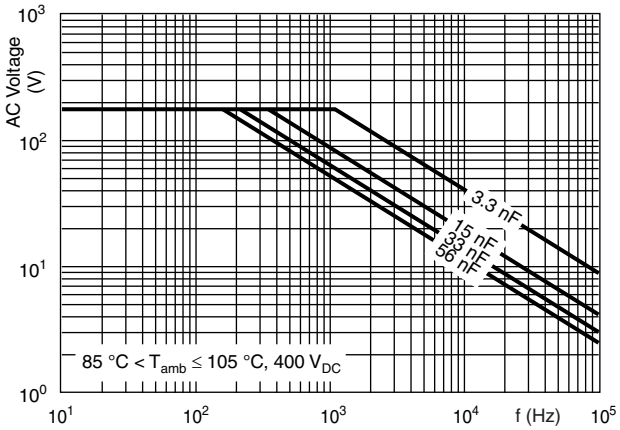

Max. RMS voltage as a function of frequency

For technical questions, contact: dc-film@vishay.com
THIS DOCUMENT IS SUBJECT TO CHANGE WITHOUT NOTICE. THE PRODUCTS DESCRIBED HEREIN AND THIS DOCUMENT ARE SUBJECT TO SPECIFIC DISCLAIMERS, SET FORTH AT www.vishay.com/doc?91000

MAXIMUM RMS CURRENT (SINEWAVE) AS A FUNCTION OF FREQUENCY

The maximum RMS current is defined by $I_{AC} = \omega \times C \times U_{AC}$

U_{AC} is the maximum AC voltage depending on the ambient temperature in the curves “Max. RMS voltage and AC current as a function of frequency”.

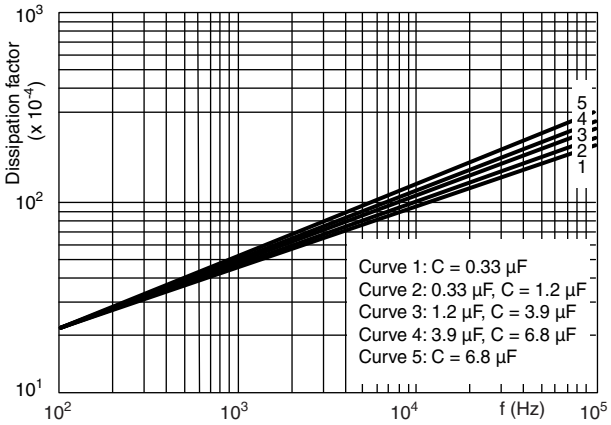

Tangent of loss angle as a function of frequency

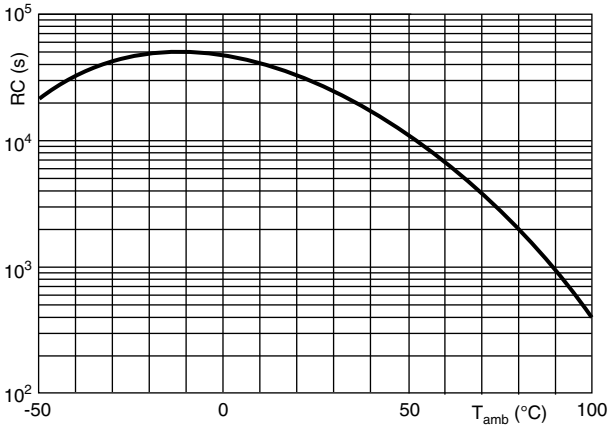

Insulation resistance as a function of the ambient temperature (typical curve)

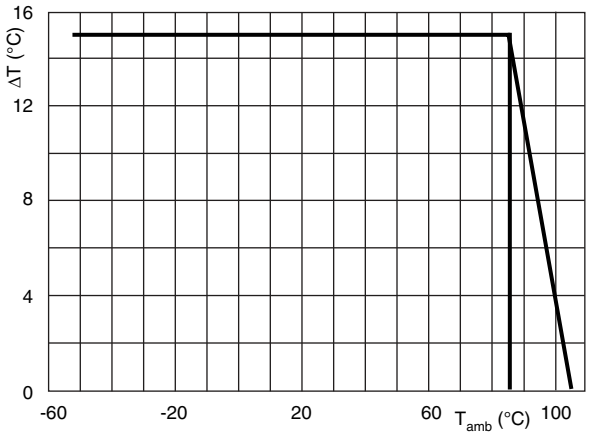

Maximum allowed component temperature rise (ΔT) as a function of the ambient temperature (T_{amb})

HEAT CONDUCTIVITY (G) AS A FUNCTION OF (ORIGINAL) PITCH AND CAPACITOR BODY THICKNESS IN mW/°C	
$W_{max.}$ (mm)	HEAT CONDUCTIVITY (mW/°C)
3.5	3.0
4.0	3.5
4.5	3.5
5.0	4.0
5.5	4.0
6.0	4.5
6.5	5.0

For technical questions, contact: dc-film@vishay.com
THIS DOCUMENT IS SUBJECT TO CHANGE WITHOUT NOTICE. THE PRODUCTS DESCRIBED HEREIN AND THIS DOCUMENT ARE SUBJECT TO SPECIFIC DISCLAIMERS, SET FORTH AT www.vishay.com/doc?91000

POWER DISSIPATION AND MAXIMUM COMPONENT TEMPERATURE RISE

The power dissipation must be limited in order not to exceed the maximum allowed component temperature rise as a function of the free ambient temperature.

The power dissipation can be calculated according type detail specification “HQN-384-01/101: Technical Information Film Capacitors”.

The component temperature rise (ΔT) can be measured (see section “Measuring the Component Temperature” for more details) or calculated by ΔT = P/G:

- ΔT = component temperature rise (°C)
- P = power dissipation of the component (mW)
- G = heat conductivity of the component (mW/°C)

MEASURING THE COMPONENT TEMPERATURE

A thermocouple must be attached to the capacitor body as in:

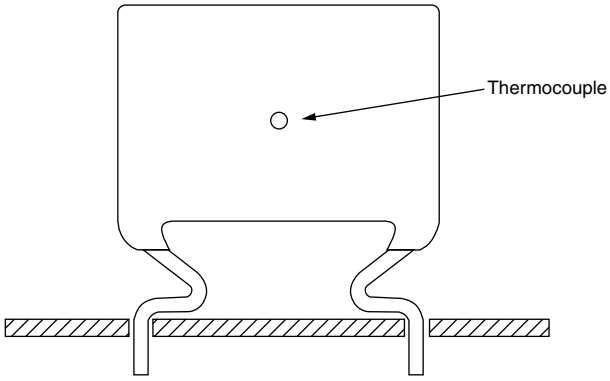

The temperature is measured in unloaded (T_{amb}) and maximum loaded condition (T_C).

The temperature rise is given by $\Delta T = T_C - T_{amb}$.

To avoid radiation or convection, the capacitor should be tested in a wind-free box.

APPLICATION NOTE AND LIMITING CONDITIONS

These capacitors are not suitable for mains applications as across-the-line capacitors without additional protection, as described hereunder. These mains applications are strictly regulated in safety standards and therefore electromagnetic interference suppression capacitors conforming the standards must be used.

To select the capacitor for a certain application, the following conditions must be checked:

1. For capacitors connected in parallel, normally the proof voltage and possibly the rated voltage must be reduced. For information depending of the capacitance value and the number of parallel connections contact: dc-film@vishay.com
2. The peak voltage (U_P) shall not be greater than the rated DC voltage (U_{RDC})
3. The peak-to-peak voltage (U_{P-P}) shall not be greater than $2\sqrt{2} \times U_{RAC}$ to avoid the ionization inception level
4. The voltage pulse slope (dU/dt) shall not exceed the rated voltage pulse slope in an RC-circuit at rated voltage and without ringing. If the pulse voltage is lower than the rated DC voltage, the rated voltage pulse slope may be multiplied by U_{RDC} and divided by the applied voltage.
   For all other pulses following equation must be fulfilled:
   $$2 \times \int_0^T \left(\frac{dU}{dt}\right)^2 \times dt < U_{RDC} \times \left(\frac{dU}{dt}\right)_{rated}$$
   T is the pulse duration.
   The rated voltage pulse slope is valid for ambient temperatures up to 85 °C. For higher temperatures a derating factor of 3 % per K shall be applied.

THIS DOCUMENT IS SUBJECT TO CHANGE WITHOUT NOTICE. THE PRODUCTS DESCRIBED HEREIN AND THIS DOCUMENT ARE SUBJECT TO SPECIFIC DISCLAIMERS, SET FORTH AT www.vishay.com/doc?91000

5. The maximum component surface temperature rise must be lower than the limits (see graph “Max. allowed component temperature rise”).
6. Since in circuits used at voltages over 280 V peak-to-peak the risk for an intrinsically active flammability after a capacitor breakdown (short circuit) increases, it is recommended that the power to the component is limited to 100 times the values mentioned in the table: “Heat Conductivity”
7. When using these capacitors as across-the-line capacitor in the input filter for mains applications or as series connected with an impedance to the mains the applicant must guarantee that the following conditions are fulfilled in any case (spikes and surge voltages from the mains included).

VOLTAGE CONDITIONS FOR 6 ABOVE		
ALLOWED VOLTAGES	**$T_{amb} \leq 85$ °C**	**85 °C < $T_{amb} \leq 105$ °C**
Maximum continuous RMS voltage	U_{RAC}	0.8 x U_{RAC}
Maximum temperature RMS-overvoltage (< 24 h)	1.25 x U_{RAC}	U_{RAC}
Maximum peak voltage (V_{O-P}) (< 2 s)	1.6 x U_{RDC}	1.3 x U_{RDC}

Example

C = 330 nF - 63 V used for the voltage signal shown in next drawing.
U_{P-P} = 40 V; U_P = 35 V; T_1 = 100 µs; T_2 = 200 µs
The ambient temperature is 35 °C

Checking conditions:

1. The peak voltage U_P = 35 V is lower than 63 V_{DC}
2. The peak-to-peak voltage 40 V is lower than $2\sqrt{2}$ x 40 V_{AC} = 113 U_{P-P}
3. The voltage pulse slope (dU/dt) = 40 V/100 µs = 0.4 V/µs
   This is lower than 110 V/µs (see specific reference data for each version)
4. The dissipated power is 16.2 mW as calculated with fourier terms
   The temperature rise for $W_{max.}$ = 4.5 mm and pitch = 5 mm will be 16.2 mW/2.5 mW/°C = 6.5 °C
   This is lower than 15 °C temperature rise at 35 °C, according figure “Max. allowed component temperature rise”
5. Not applicable
6. Not applicable

Voltage Signal

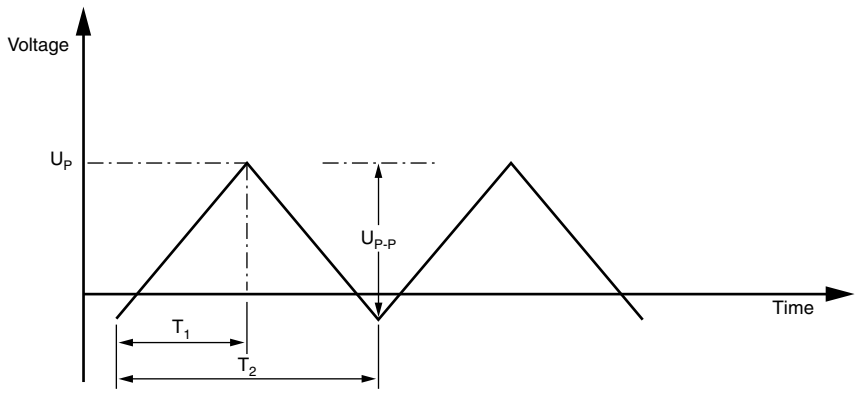

For technical questions, contact: dc-film@vishay.com
THIS DOCUMENT IS SUBJECT TO CHANGE WITHOUT NOTICE. THE PRODUCTS DESCRIBED HEREIN AND THIS DOCUMENT ARE SUBJECT TO SPECIFIC DISCLAIMERS, SET FORTH AT www.vishay.com/doc?91000

INSPECTION REQUIREMENTS

General Notes

Sub-clause numbers of tests and performance requirements refer to the “Sectional Specification, Publication IEC 60384-2 and Specific Reference Data”.

GROUP C INSPECTION REQUIREMENTS		
SUB-CLAUSE NUMBER AND TEST	**CONDITIONS**	**PERFORMANCE REQUIREMENTS**
SUB-GROUP C1A PART OF SAMPLE OF SUB-GROUP C1		
4.1 Dimensions (detail)		As specified in chapters “General Data” of this specification
4.3.1 Initial measurements	Capacitance Tangent of loss angle: for C ≤ 470 nF at 100 kHz or for C > 470 nF at 10 kHz	
4.3 Robustness of terminations	Tensile: load 10 N; 10 s Bending: load 5 N; 4 x 90°	No visible damage
4.4 Resistance to soldering heat	Method: 1A Solder bath: 280 °C ± 5 °C Duration: 10 s	
4.14 Component solvent resistance	Isopropylalcohol at room temperature Method: 2 Immersion time: 5 min ± 0.5 min Recovery time: min. 1 h, max. 2 h	
4.4.2 Final measurements	Visual examination	No visible damage Legible marking
	Capacitance	$\lvert\Delta C/C\rvert \leq 2$ % of the value measured initially
	Tangent of loss angle	Increase of tan δ ≤ 0.005 for: C ≤ 100 nF or ≤ 0.010 for: 100 nF < C ≤ 220 nF or ≤ 0.015 for: 220 nF < C ≤ 470 nF and ≤ 0.003 for: C > 470 nF Compared to values measured in 4.3.1
SUB-GROUP C1B PART OF SAMPLE OF SUB-GROUP C1		
4.6.1 Initial measurements	Capacitance Tangent of loss angle: for C ≤ 470 nF at 100 kHz or for C > 470 nF at 10 kHz	No visible damage
4.6 Rapid change of temperature	θA = -55 °C θB = +105 °C 5 cycles Duration t = 30 min	
4.7 Vibration	Visual examination Mounting: See section “Mounting” of this specification Procedure B4 Frequency range: 10 Hz to 55 Hz Amplitude: 0.75 mm or Acceleration 98 m/s² (whichever is less severe) Total duration 6 h	No visible damage
4.7.2 Final inspection	Visual examination	No visible damage

For technical questions, contact: dc-film@vishay.com
THIS DOCUMENT IS SUBJECT TO CHANGE WITHOUT NOTICE. THE PRODUCTS DESCRIBED HEREIN AND THIS DOCUMENT ARE SUBJECT TO SPECIFIC DISCLAIMERS, SET FORTH AT www.vishay.com/doc?91000

GROUP C INSPECTION REQUIREMENTS		
SUB-CLAUSE NUMBER AND TEST	**CONDITIONS**	**PERFORMANCE REQUIREMENTS**
SUB-GROUP C1B PART OF SAMPLE OF SUB-GROUP C1		
4.9 Shock	Mounting: See section “Mounting” of this specification Pulse shape: half sine Acceleration: 490 m/s² Duration of pulse: 11 ms	
4.9.3 Final measurements	Visual examination	No visible damage
	Capacitance	$\lvert\Delta C/C\rvert \leq 3$ % of the value measured in 4.6.1
	Tangent of loss angle	Increase of tan δ ≤ 0.005 for: C ≤ 100 nF or ≤ 0.010 for: 100 nF < C ≤ 220 nF or ≤ 0.015 for: 220 nF < C ≤ 470 nF and ≤ 0.003 for: C > 470 nF Compared to values measured in 4.6.1
	Insulation resistance	As specified in section “Insulation Resistance” of this specification
SUB-GROUP C1 COMBINED SAMPLE OF SPECIMENS OF SUB-GROUPS C1A AND C1B		
4.10 Climatic sequence		
4.10.2 Dry heat	Temperature: +105 °C Duration: 16 h	
4.10.3 Damp heat cyclic Test Db, first cycle		
4.10.4 Cold	Temperature: -55 °C Duration: 2 h	
4.10.6 Damp heat cyclic Test Db, remaining cycles		
4.10.6.2 Final measurements	Voltage proof = U_{RDC} for 1 min within 15 min after removal from test chamber	No breakdown of flash-over
	Visual examination	No visible damage Legible marking
	Capacitance	$\lvert\Delta C/C\rvert \leq 5$ % of the value measured in 4.4.2 or 4.9.3
	Tangent of loss angle	Increase of tan δ ≤ 0.007 for: C ≤ 100 nF or ≤ 0.010 for: 100 nF < C ≤ 220 nF or ≤ 0.015 for: 220 nF < C ≤ 470 nF and ≤ 0.005 for: C > 470 nF Compared to values measured in 4.3.1 or 4.6.1
	Insulation resistance	≥ 50 % of values specified in section “Insulation Resistance” of this specification

For technical questions, contact: dc-film@vishay.com
THIS DOCUMENT IS SUBJECT TO CHANGE WITHOUT NOTICE. THE PRODUCTS DESCRIBED HEREIN AND THIS DOCUMENT ARE SUBJECT TO SPECIFIC DISCLAIMERS, SET FORTH AT www.vishay.com/doc?91000

GROUP C INSPECTION REQUIREMENTS		
SUB-CLAUSE NUMBER AND TEST	**CONDITIONS**	**PERFORMANCE REQUIREMENTS**
SUB-GROUP C2		
4.11 Damp heat steady state	56 days, 40 °C, 90 % to 95 % RH	
4.11.1 Initial measurements	Capacitance Tangent of loss angle at 1 kHz	
4.11.3 Final measurements	Voltage proof = U_{RDC} for 1 min within 15 min after removal from test chamber	No breakdown of flash-over
	Visual examination	No visible damage Legible marking
	Capacitance	$\lvert\Delta C/C\rvert \leq 5$ % of the value measured in 4.11.1.
	Tangent of loss angle	Increase of tan $\delta \leq 0.005$ Compared to values measured in 4.11.1
	Insulation resistance	≥ 50 % of values specified in section "Insulation Resistance" of this specification
SUB-GROUP C3		
4.12 Endurance	Duration: 2000 h 1.25 x U_{RDC} at 85 °C 1.0 x U_{RDC} at 105 °C	
4.12.1 Initial measurements	Capacitance Tangent of loss angle: for C ≤ 470 nF at 100 kHz or for C > 470 nF at 10 kHz	
4.12.5 Final measurements	Visual examination	No visible damage Legible marking
	Capacitance	$\lvert\Delta C/C\rvert \leq 5$ % compared to values measured in 4.12.1
	Tangent of loss angle	Increase of tan δ ≤ 0.005 for: C ≤ 100 nF or ≤ 0.010 for: 100 nF < C ≤ 220 nF or ≤ 0.015 for: 220 nF < C ≤ 470 nF and ≤ 0.003 for: C > 470 nF Compared to values measured in 4.12.1
	Insulation resistance	≥ 50 % of values specified in section "Insulation Resistance" of this specification
SUB-GROUP C4		
4.13 Charge and discharge	10 000 cycles Charged to U_R V_{DC} Discharge resistance: $R = \frac{U_R}{C \times 2.5 \times (dU/dt)_R}$	
4.13.1 Initial measurements	Capacitance Tangent of loss angle: for C ≤ 470 nF at 100 kHz or for C > 470 nF at 10 kHz	
4.13.3 Final measurements	Capacitance	$\lvert\Delta C/C\rvert \leq 3$ % compared to values measured in 4.13.1
	Tangent of loss angle	Increase of tan δ ≤ 0.005 for: C ≤ 100 nF or ≤ 0.010 for: 100 nF < C ≤ 220 nF or ≤ 0.015 for: 220 nF < C ≤ 470 nF and ≤ 0.003 for: C > 470 nF Compared to values measured in 4.13.1
	Insulation resistance	≥ 50 % of values specified in section "Insulation Resistance" of this specification

For technical questions, contact: dc-film@vishay.com
THIS DOCUMENT IS SUBJECT TO CHANGE WITHOUT NOTICE. THE PRODUCTS DESCRIBED HEREIN AND THIS DOCUMENT ARE SUBJECT TO SPECIFIC DISCLAIMERS, SET FORTH AT www.vishay.com/doc?91000

Disclaimer

ALL PRODUCT, PRODUCT SPECIFICATIONS AND DATA ARE SUBJECT TO CHANGE WITHOUT NOTICE TO IMPROVE RELIABILITY, FUNCTION OR DESIGN OR OTHERWISE.

Vishay Intertechnology, Inc., its affiliates, agents, and employees, and all persons acting on its or their behalf (collectively, “Vishay”), disclaim any and all liability for any errors, inaccuracies or incompleteness contained in any datasheet or in any other disclosure relating to any product.

Vishay makes no warranty, representation or guarantee regarding the suitability of the products for any particular purpose or the continuing production of any product. To the maximum extent permitted by applicable law, Vishay disclaims (i) any and all liability arising out of the application or use of any product, (ii) any and all liability, including without limitation special, consequential or incidental damages, and (iii) any and all implied warranties, including warranties of fitness for particular purpose, non-infringement and merchantability.

Statements regarding the suitability of products for certain types of applications are based on Vishay's knowledge of typical requirements that are often placed on Vishay products in generic applications. Such statements are not binding statements about the suitability of products for a particular application. It is the customer's responsibility to validate that a particular product with the properties described in the product specification is suitable for use in a particular application. Parameters provided in datasheets and / or specifications may vary in different applications and performance may vary over time. All operating parameters, including typical parameters, must be validated for each customer application by the customer's technical experts. Product specifications do not expand or otherwise modify Vishay's terms and conditions of purchase, including but not limited to the warranty expressed therein.

Hyperlinks included in this datasheet may direct users to third-party websites. These links are provided as a convenience and for informational purposes only. Inclusion of these hyperlinks does not constitute an endorsement or an approval by Vishay of any of the products, services or opinions of the corporation, organization or individual associated with the third-party website. Vishay disclaims any and all liability and bears no responsibility for the accuracy, legality or content of the third-party website or for that of subsequent links.

Except as expressly indicated in writing, Vishay products are not designed for use in medical, life-saving, or life-sustaining applications or for any other application in which the failure of the Vishay product could result in personal injury or death. Customers using or selling Vishay products not expressly indicated for use in such applications do so at their own risk. Please contact authorized Vishay personnel to obtain written terms and conditions regarding products designed for such applications.

No license, express or implied, by estoppel or otherwise, to any intellectual property rights is granted by this document or by any conduct of Vishay. Product names and markings noted herein may be trademarks of their respective owners.

© 2024 VISHAY INTERTECHNOLOGY, INC. ALL RIGHTS RESERVED