Ultra Precision Thin Film MELF Resistors

FEATURES

- Most advanced thin film technology
- Long term stability down to 0.02 %
- TCR down to ± 5 ppm/K
- High precision tolerance down to ± 0.02 %
- Operating voltage 350 V for UMB 0207
- Material categorization: for definitions of compliance please see www.vishay.com/doc?99912

Pb-free
RoHS COMPLIANT
HALOGEN FREE
GREEN (5-2008)

LINKS TO ADDITIONAL RESOURCES

3D Models

UMA 0204 and UMB 0207 ultra precision thin film MELF resistors combine the proven reliability of precision MELF products with the most advanced level of precision and stability first achieved with axial thin film precision resistors. This unique combination makes the product perfectly suited for all applications with outstanding requirements towards reliable precision and stability.

APPLICATIONS

- Measuring and calibration equipment
- Industrial process control systems
- Space and aircraft electronics
- Medical equipment

TECHNICAL SPECIFICATIONS

DESCRIPTION	UMA 0204	UMB 0207
DIN size	0204	0207
Metric size code	RC3715M	RC6123M
Resistance range	10 Ω to 332 kΩ	100 Ω to 390 kΩ
Resistance tolerance	± 0.25 %; ± 0.1 %; ± 0.05 %; ± 0.02 %	
Temperature coefficient	± 15 ppm/K; ± 10 ppm/K; ± 5 ppm/K	
Rated dissipation, P_{70} (1)	0.25 W	0.4 W
Operating voltage, $U_{max.}$ AC_{RMS}/DC	200 V	350 V
Permissible film temperature, $\vartheta_{max.}$ (1)	125 °C	
Operating temperature range (1)	-55 °C to 125 °C	
Permissible voltage against ambient (insulation): 1 min; U_{ins}	300 V	500 V
Internal thermal resistance (1)	46 K/W	26 K/W
Failure rate: $FIT_{observed}$	≤ 0.05 x 10^{-9}/h	

Note

(1) Please refer to APPLICATION INFORMATION below

APPLICATION INFORMATION

When the resistor dissipates power, a temperature rise above the ambient temperature occurs, dependent on the thermal resistance of the assembled resistor together with the printed circuit board. The rated dissipation applies only if the permitted film temperature is not exceeded.

Please consider the application note “Thermal Management in Surface-Mounted Resistor Applications” (www.vishay.com/doc?28844) for information on the general nature of thermal resistance.

These resistors do not feature a limited lifetime when operated within the permissible limits. However, resistance value drift increasing over operating time may result in exceeding a limit acceptable to the specific application, thereby establishing a functional lifetime.

For technical questions, contact: melf@vishay.com
THIS DOCUMENT IS SUBJECT TO CHANGE WITHOUT NOTICE. THE PRODUCTS DESCRIBED HEREIN AND THIS DOCUMENT ARE SUBJECT TO SPECIFIC DISCLAIMERS, SET FORTH AT www.vishay.com/doc?91000

MAXIMUM RESISTANCE CHANGE AT RATED DISSIPATION			
OPERATION MODE		**PRECISION**	**STANDARD**
Rated dissipation, P_{70}	**UMA 0204**	0.07 W	0.25 W
	UMB 0207	0.11 W	0.4 W
Operating temperature range		-55 °C to 85 °C	-55 °C to 125 °C
Permissible film temperature, ϑ_F max.		85 °C	125 °C
Max. resistance change at P_{70} for resistance range, $\lvert\Delta R/R\rvert$ after:	**UMA 0204**	10 Ω to 332 kΩ	10 Ω to 332 kΩ
	UMB 0207	100 Ω to 390 kΩ	100 Ω to 390 kΩ
	1000 h	≤ 0.02 %	≤ 0.05 %
	8000 h	≤ 0.05 %	≤ 0.1 %
	225 000 h	≤ 0.15 %	≤ 0.3 %

TEMPERATURE COEFFICIENT AND RESISTANCE RANGE (1)				
TYPE / SIZE	**TCR**	**TOLERANCE**	**RESISTANCE**	**E-SERIES**
UMA 0204	± 15 ppm/K	± 0.05 %	47 Ω to 332 kΩ	E24; E192
	± 10 ppm/K	± 0.25 %	10 Ω to 332 kΩ	
		± 0.1 %	43 Ω to 332 kΩ	
		± 0.05 %	75 Ω to 221 kΩ	
	± 5 ppm/K	± 0.25 %	33 Ω to 221 kΩ	
		± 0.1 %	56 Ω to 221 kΩ	
		± 0.05 %	75 Ω to 150 kΩ	
		± 0.02 %	75 Ω to 100 kΩ	
UMB 0207	± 15 ppm/K	± 0.05 %	100 Ω to 390 kΩ	
	± 10 ppm/K	± 0.25 %	100 Ω to 390 kΩ	
		± 0.1 %	100 Ω to 390 kΩ	
		± 0.05 %	100 Ω to 390 kΩ	
	± 5 ppm/K	± 0.25 %	270 Ω to 390 kΩ	
		± 0.1 %	270 Ω to 390 kΩ	
		± 0.05 %	270 Ω to 390 kΩ	
		± 0.02 %	270 Ω to 390 kΩ	

Notes

(1) For the approved IECQ-CECC resistance range, please refer to www.vishay.com/doc?28945

PACKAGING						
TYPE / SIZE	**CODE**	**QUANTITY**	**PACKAGING STYLE**	**WIDTH**	**PITCH**	**PACKAGING DIMENSIONS**
UMA 0204	AU	100	Antistatic blister tape acc. IEC 60286-3, Type 2a	8 mm	4 mm	Box
	A1	1000				Ø 180 mm / 7"
	A3 = AL	3000				
	A0	10 000				Ø 330 mm / 13"
UMB 0207	BU	100	Antistatic blister tape acc. IEC 60286-3, Type 2a	12 mm	4 mm	Box
	B1	1000				Ø 180 mm / 7"
	B2	2000				
	B7	7000				Ø 330 mm / 13"

For technical questions, contact: melf@vishay.com
THIS DOCUMENT IS SUBJECT TO CHANGE WITHOUT NOTICE. THE PRODUCTS DESCRIBED HEREIN AND THIS DOCUMENT ARE SUBJECT TO SPECIFIC DISCLAIMERS, SET FORTH AT www.vishay.com/doc?91000

PART NUMBER AND PRODUCT DESCRIPTION

Part Number: UMB02070F5620AB200

U	M	B	0	2	0	7	0	F	5	6	2	0	A	B	2	0	0

TYPE / SIZE	VERSION	TCR	RESISTANCE	TOLERANCE	PACKAGING
UMA 0204 **UMB 0207**	**0** = standard	**G** = ± 5 ppm/K **F** = ± 10 ppm/K **E** = ± 15 ppm/K	3 digit value 1 digit multiplier **Multiplier** **9** = $*10^{-1}$ **0** = $*10^{0}$ **1** = $*10^{1}$ **2** = $*10^{2}$ **3** = $*10^{3}$	**H** = ± 0.02 % **A** = ± 0.05 % **B** = ± 0.1 % **C** = ± 0.25 %	**AU** **A1** **A3** **A0** **BU** **B1** **B2** **B7**

Product Description: UMB 0207-10 0.05 % B2 562R

UMB	0207	10	0.05 %	B2	562R
TYPE	SIZE	TCR	TOLERANCE	PACKAGING	RESISTANCE
UMA **UMB**	**0204** **0207**	± **5** ppm/K ± **10** ppm/K ± **15** ppm/K	± **0.02** % ± **0.05** % ± **0.1** % ± **0.25** %	**AU** **A1** **AL** **A0** **BU** **B1** **B2** **B7**	**562R** = 562 Ω

Note

- Products can be ordered using either the PART NUMBER or the PRODUCT DESCRIPTION

For technical questions, contact: melf@vishay.com
THIS DOCUMENT IS SUBJECT TO CHANGE WITHOUT NOTICE. THE PRODUCTS DESCRIBED HEREIN AND THIS DOCUMENT ARE SUBJECT TO SPECIFIC DISCLAIMERS, SET FORTH AT www.vishay.com/doc?91000

DESCRIPTION

Production is strictly controlled and follows an extensive set of instructions established for reproducibility. A homogeneous film of special metal alloy is deposited on a high grade ceramic body (Al_2O_3) and conditioned to achieve the desired temperature coefficient. Nickel plated steel termination caps are firmly pressed on the metallized rods. A special laser is used to achieve the target value by smoothly cutting a helical groove in the resistive layer without damaging the ceramics. The resistor elements are covered by a unique protective coating designed for electrical, mechanical, and climatic protection. The terminations receive a final pure matte tin on nickel plating. Five color code rings designate the resistance value and tolerance in accordance with **IEC 60062** [(1)].

The result of the determined production is verified by an extensive testing procedure and optical inspection performed on 100 % of the individual resistors. This includes full screening for the elimination of products with a potential risk of early field failures. Only accepted products are laid directly into the blister tape in accordance with **IEC 60286-3, Type 2a** [(1)].

ASSEMBLY

The resistors are suitable for processing on automatic SMD assembly systems. They are suitable for automatic soldering using wave, reflow or vapor phase as shown in **IEC 61760-1** [(1)]. The encapsulation is resistant to all cleaning solvents commonly used in the electronics industry, including alcohols, esters and aqueous solutions. The suitability of conformal coatings, potting compounds and their processes, if applied, shall be qualified by appropriate means to ensure the long term stability of the whole system.
The resistors are completely lead (Pb)-free, the pure matte tin plating provides compatibility with lead (Pb)-free and lead containing soldering processes. Solderability is specified for 2 years after production or requalification, however, excellent solderability is proven after extended storage in excess of 10 years. The permitted storage time is 20 years. The immunity of the plating against tin whisker growth has been proven under extensive testing.

MATERIALS

Vishay acknowledges the following systems for the regulation of hazardous substances:

- IEC 62474, Material Declaration for Products of and for the Electrotechnical Industry, with the list of declarable substances given therein [(2)]
- The Global Automotive Declarable Substance List (GADSL) [(3)]
- The REACH regulation (1907/2006/EC) and the related list of substances with very high concern (SVHC) [(4)] for its supply chain

The products do not contain any of the banned substances as per IEC 62474, GADSL, or the SVHC list, see www.vishay.com/how/leadfree.
Hence the products fully comply with the following directives:

- 2000/53/EC End-of-Life Vehicle Directive (ELV) and Annex II (ELV II)
- 2011/65/EU Restriction of the Use of Hazardous Substances Directive (RoHS) with amendment 2015/863/EU
- 2012/19/EU Waste Electrical and Electronic Equipment Directive (WEEE)

Vishay pursues the elimination of conflict minerals from its supply chain, see the Conflict Minerals Policy at www.vishay.com/doc?49037.

APPROVALS

Where applicable the resistors are approved within the IECQ-CECC Quality Assessment System for Electronic Components to the detail specification **EN 140401-803** which refers to **EN 60115-1, EN 60115-8** and the variety of environmental test procedures of the **IEC 60068** [(1)] series.

Conformity is attested by the use of the **CECC** logo ( ) as the mark of conformity on the package label.

Vishay Beyschlag has achieved "**Approval of Manufacturer**" in accordance with **IECQ 03-1**. The release certificate for "**Technology Approval Schedule**" in accordance with **CECC 240001** based on **IECQ 03-3-1** is granted for the Vishay Beyschlag manufacturing process.

RELATED PRODUCTS

For products with a wider range of TCR, tolerance and resistance, see the datasheets:

- "Professional Thin Film MELF Resistors" (www.vishay.com/doc?28713)
- "Precision Thin Film MELF Resistors" (www.vishay.com/doc?28714)

Notes

(1) The quoted IEC standards are also released as EN standards with the same number and identical contents
(2) The IEC 62474 list of declarable substances is maintained in a dedicated database, which is available at http://std.iec.ch/iec62474.
(3) The Global Automotive Declarable Substance List (GADSL) is maintained by the American Chemistry Council and available at www.gadsl.org
(4) The SVHC list is maintained by the European Chemical Agency (ECHA) and available at http://echa.europa.eu/candidate-list-table

THIS DOCUMENT IS SUBJECT TO CHANGE WITHOUT NOTICE. THE PRODUCTS DESCRIBED HEREIN AND THIS DOCUMENT ARE SUBJECT TO SPECIFIC DISCLAIMERS, SET FORTH AT www.vishay.com/doc?91000

FUNCTIONAL PERFORMANCE

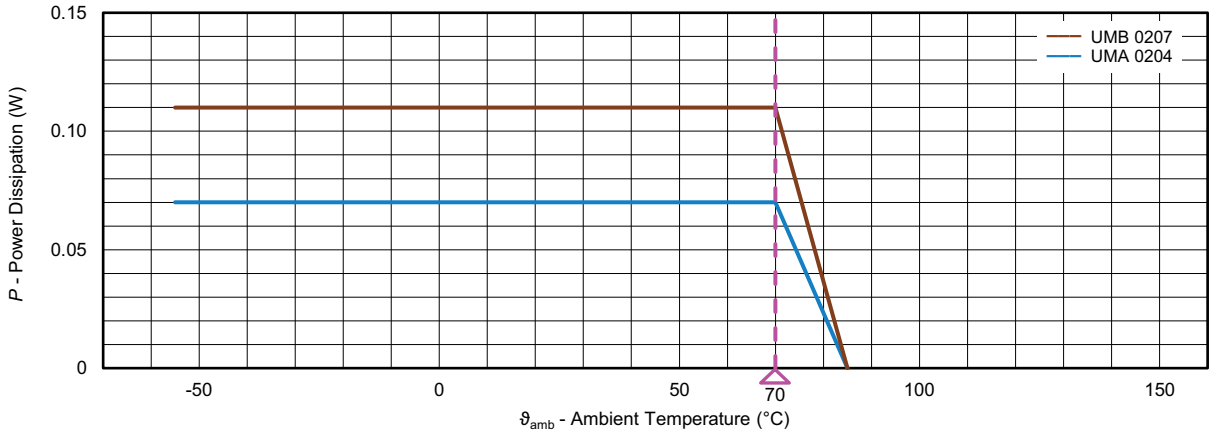

Derating - Precision Operation Mode

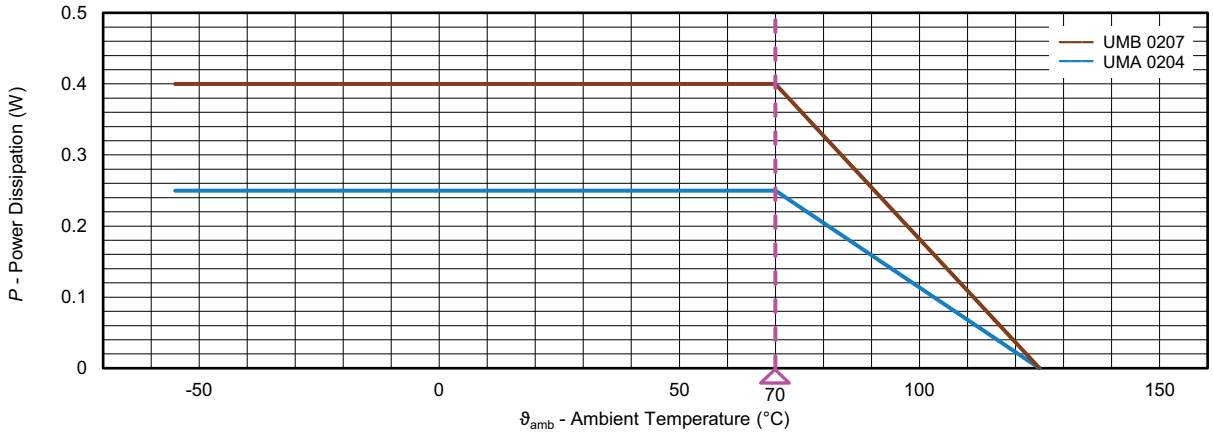

Derating - Standard Operation Mode

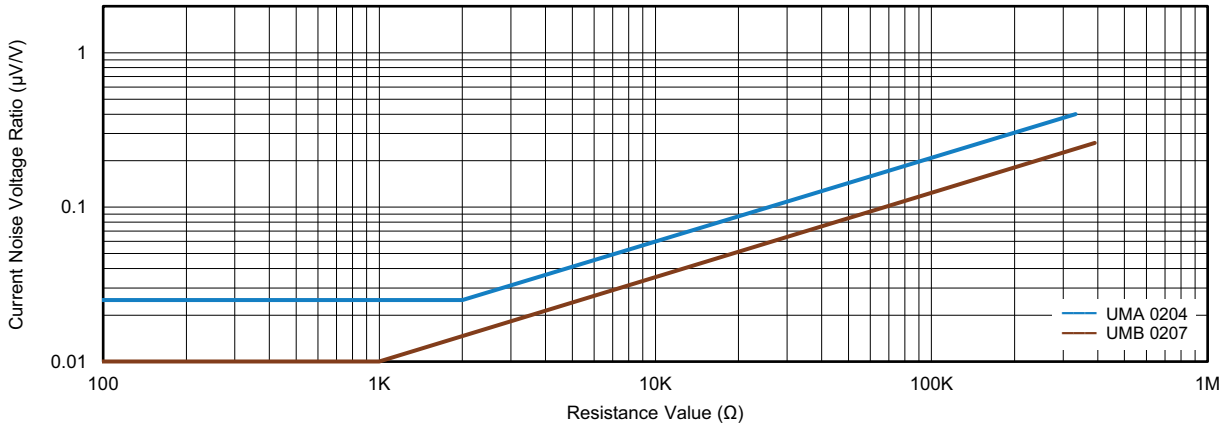

Current Noise - A_1

For technical questions, contact: melf@vishay.com
THIS DOCUMENT IS SUBJECT TO CHANGE WITHOUT NOTICE. THE PRODUCTS DESCRIBED HEREIN AND THIS DOCUMENT ARE SUBJECT TO SPECIFIC DISCLAIMERS, SET FORTH AT www.vishay.com/doc?91000

TESTS AND REQUIREMENTS

All tests are carried out in accordance with the following specifications:

EN 60115-1, generic specification

EN 60115-8, sectional specification

EN 140401-803, detail specification

IEC 60068-2-xx, test methods

The components are approved under the IECQ-CECC quality assessment system for electronic components according to table "Temperature Coefficient and Resistance Range".

The parameters stated in the Test Procedures and Requirements table are based on the required tests and permitted limits of EN 140401-803. The table presents only the most important tests, for the full test schedule refer to the documents listed above. However, some additional tests and a number of improvements against those minimum requirements have been included.

The testing also covers most of the requirements specified by EIA/ECA-703 and JIS-C-5201-1.

The tests are carried out under standard atmospheric conditions in accordance with IEC 60068-1, 4.3, whereupon the following values are applied:

Temperature: 15 °C to 35 °C

Relative humidity: 25 % to 75 %

Air pressure: 86 kPa to 106 kPa (860 mbar to 1060 mbar)

A climatic category LCT / UCT / 56 is applied, defined by the lower category temperature (LCT), the upper category temperature (UCT), and the duration of exposure in the damp heat, steady state test (56 days).

The components are mounted for testing on printed circuit boards in accordance with EN 60115-8, 2.4.2, unless otherwise specified.

TEST PROCEDURES AND REQUIREMENTS

EN 60115-1 CLAUSE	IEC 60068-2 (1) TEST METHOD	TEST	PROCEDURE	REQUIREMENTS PERMISSIBLE CHANGE (ΔR)		
			Stability for product types:	STABILITY CLASS 0.05 OR BETTER	STABILITY CLASS 0.1 OR BETTER	STABILITY CLASS 0.25 OR BETTER
			UMA 0204	100 Ω to 100 kΩ	43 Ω to 221 kΩ	10 Ω to 332 kΩ
			UMB 0207	270 Ω to 100 kΩ	100 Ω to 390 kΩ	-
4.5	-	Resistance	-	± 0.25 % R; ± 0.1 % R; ± 0.05 % R; ± 0.02 % R		
4.8	-	Temperature coefficient	At (20/-10/20) °C and (20/85/20) °C	± 10 ppm/K; ± 5 ppm/K		
			At (20/-55/20) °C and (20/125/20) °C	± 15 ppm/K		
4.25.1	-	Endurance at 70 °C: Precision operation mode	$U = \sqrt{P_{70} \times R}$ or $U = U_{max.}$; whichever is the less severe; 1.5 h on; 0.5 h off; 70 °C; 1000 h	± (0.02 % R + 1 mΩ)		
			70 °C; 8000 h	± (0.05 % R + 1 mΩ)		
		Endurance at 70 °C: Standard operation mode	$U = \sqrt{P_{70} \times R}$ or $U = U_{max.}$; whichever is the less severe; 1.5 h on; 0.5 h off; 70 °C; 1000 h	± (0.05 % R + 1 mΩ)		
			70 °C; 8000 h	± (0.1 % R + 1 mΩ)		
4.25.3	-	Endurance at upper category temperature	85 °C; 1000 h	± (0.01 % R + 1 mΩ)	± (0.05 % R + 1 mΩ)	± (0.1 % R + 1 mΩ)
			125 °C; 1000 h	± (0.05 % R + 1 mΩ)	± (0.1 % R + 1 mΩ)	± (0.15 % R + 1 mΩ)
4.24	78 (Cab)	Damp heat, steady state	(40 ± 2) °C; 56 days; (93 ± 3) % RH	± (0.03 % R + 1 mΩ)	± (0.05 % R + 1 mΩ)	± (0.1 % R + 1 mΩ)
4.37	67 (Cy)	Damp heat, steady state, accelerated	(85 ± 2) °C; (85 ± 5) % RH; $U = 0.3 \times \sqrt{P_{70} \times R}$ ≤ 100 V and $U = 0.3 \times U_{max.}$; (the smaller value is valid) 1000 h	± (0.1 % R + 1 mΩ)	± (0.25 % R + 1 mΩ)	

For technical questions, contact: melf@vishay.com
THIS DOCUMENT IS SUBJECT TO CHANGE WITHOUT NOTICE. THE PRODUCTS DESCRIBED HEREIN AND THIS DOCUMENT ARE SUBJECT TO SPECIFIC DISCLAIMERS, SET FORTH AT www.vishay.com/doc?91000

TEST PROCEDURES AND REQUIREMENTS						
EN 60115-1 CLAUSE	IEC 60068-2 (1) TEST METHOD	TEST	PROCEDURE	REQUIREMENTS PERMISSIBLE CHANGE (ΔR)		
			Stability for product types:	STABILITY CLASS 0.05 OR BETTER	STABILITY CLASS 0.1 OR BETTER	STABILITY CLASS 0.25 OR BETTER
			UMA 0204	100 Ω to 100 kΩ	43 Ω to 221 kΩ	10 Ω to 332 kΩ
			UMB 0207	270 Ω to 100 kΩ	100 Ω to 390 kΩ	-
4.23		Climatic sequence:				
4.23.2	2 (Bb)	Dry heat	UCT; 16 h			
4.23.3	30 (Db)	Damp heat, cyclic	55 °C; 24 h; ≥ 90 % RH; 1 cycle			
4.23.4	1 (Ab)	Cold	LCT; 2 h			
4.23.5	13 (M)	Low air pressure	8.5 kPa; 2 h; (25 ± 10) °C			
4.23.6	30 (Db)	Damp heat, cyclic	55 °C; 24 h; ≥ 90 % RH; 5 cycles			
4.23.7	-	DC load	$U = \sqrt{P_{70} \times R} \leq U_{max.}$; 1 min.			
			LCT = -10 °C; UCT = 85 °C	± (0.03 % R + 1 mΩ)	± (0.05 % R + 1 mΩ)	-
			LCT = -55 °C; UCT = 125 °C	-	-	± (0.1 % R + 1 mΩ)
-	1 (Aa)	Cold	-55 °C; 2 h	± (0.02 % R + 0.1 mΩ)		
4.19	14 (Na)	Rapid change of temperature	30 min at LCT; 30 min at UCT; LCT = -10 °C; UCT = 85 °C			
			5 cycles	± (0.01 % R + 1 mΩ)	± (0.02 % R + 1 mΩ)	-
			1000 cycles	± (0.05 % R + 1 mΩ)	± (0.05 % R + 1 mΩ)	-
			LCT = -55 °C; UCT = 125 °C			
			5 cycles	-	-	± (0.025 % R + 1 mΩ)
			1000 cycles	-	-	± (0.1 % R + 1 mΩ)
4.13	-	Short time overload; Precision operation mode	$U = 2.5 \times \sqrt{P_{70} \times R}$ or $U = 2 \times U_{max.}$; whichever is the less severe; 5 s	± (0.005 % R + 1 mΩ)	± (0.01 % R + 1 mΩ)	
		Short time overload; Standard operation mode		± (0.01 % R + 1 mΩ)		
4.27	-	Single pulse high voltage overload; Standard operation mode	Severity no. 4: $U = 10 \times \sqrt{P_{70} \times R}$ or $U = 2 \times U_{max.}$; whichever is the less severe; 10 pulses 10 µs/700 µs	± (0.25 % R + 5 mΩ)		
4.39	-	Periodic electric overload; Standard operation mode	$U = \sqrt{15 \times P_{70} \times R}$ or $U = 2 \times U_{max.}$; whichever is the less severe; 0.1 s on; 2.5 s off; 1000 cycles	± (0.5 % R + 5 mΩ)		

For technical questions, contact: melf@vishay.com
THIS DOCUMENT IS SUBJECT TO CHANGE WITHOUT NOTICE. THE PRODUCTS DESCRIBED HEREIN AND THIS DOCUMENT ARE SUBJECT TO SPECIFIC DISCLAIMERS, SET FORTH AT www.vishay.com/doc?91000

TEST PROCEDURES AND REQUIREMENTS						
EN 60115-1 CLAUSE	IEC 60068-2 (1) TEST METHOD	TEST	PROCEDURE	REQUIREMENTS PERMISSIBLE CHANGE (ΔR)		
			Stability for product types:	STABILITY CLASS 0.05 OR BETTER	STABILITY CLASS 0.1 OR BETTER	STABILITY CLASS 0.25 OR BETTER
			UMA 0204	100 Ω to 100 kΩ	43 Ω to 221 kΩ	10 Ω to 332 kΩ
			UMB 0207	270 Ω to 100 kΩ	100 Ω to 390 kΩ	-
4.22	6 (Fc)	Vibration	Endurance by sweeping; 10 Hz to 2000 Hz; no resonance; amplitude ≤ 1.5 mm or ≤ 200 m/s^2; 7.5 h	± (0.01 % R + 1 mΩ)		
4.38	-	Electrostatic discharge (Human Body Model)	IEC 61340-3-1 (1); 3 pos. + 3 neg. discharges UMA 0204: 2 kV UMB 0207: 4 kV	± (0.5 % R + 50 mΩ)		
4.17	58 (Td)	Solderability	Solder bath method; SnPb40; non-activated flux; (215 ± 3) °C; (3 ± 0.3) s	Good tinning (≥ 95 % covered); no visible damage		
			Solder bath method; SnAg3Cu0.5 or SnAg3.5; non-activated flux; (235 ± 3) °C; (2 ± 0.2) s	Good tinning (≥ 95 % covered); no visible damage		
4.18	58 (Td)	Resistance to soldering heat	Solder bath method; (260 ± 5) °C; (2 ± 0.2) s	(2)		± (0.05 % R + 10 mΩ)
			Reflow method 2 (IR/forced gas convection); (260 ± 5) °C; (10 ± 1) s	± (0.01 % R + 1 mΩ)	± (0.02 % R + 1 mΩ)	
4.29	45 (XA)	Component solvent resistance	Isopropyl alcohol; 50 °C; method 2	No visible damage		
4.30	45 (XA)	Solvent resistance of marking	Isopropyl alcohol; 50 °C; method 1, toothbrush	Marking legible; no visible damage		
4.32	21 (Ue_3)	Shear (adhesion)	45 N	No visible damage		
4.33	21 (Ue_1)	Substrate bending	Depth 2 mm, 3 times	No visible damage, no open circuit in bent position ± (0.02 % R + 10 mΩ)		± (0.05 % R + 10 mΩ)
4.7	-	Voltage proof	$U_{RMS} = U_{ins}$; 60 s	No flashover or breakdown		
4.35	-	Flammability	IEC 60695-11-5 (1), needle flame test; 10 s	No burning after 30 s		

Notes

(1) The quoted IEC standards are also released as EN standards with the same number and identical contents

(2) Wave soldering is not recommended

For technical questions, contact: melf@vishay.com
THIS DOCUMENT IS SUBJECT TO CHANGE WITHOUT NOTICE. THE PRODUCTS DESCRIBED HEREIN AND THIS DOCUMENT ARE SUBJECT TO SPECIFIC DISCLAIMERS, SET FORTH AT www.vishay.com/doc?91000

DIMENSIONS

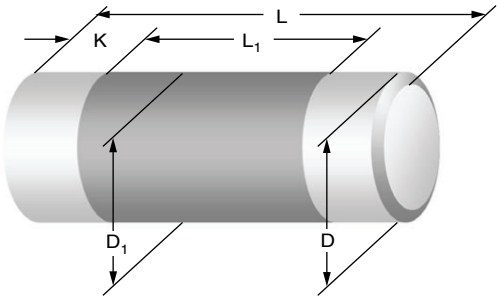

DIMENSIONS AND MASS						
TYPE / SIZE	**L (mm)**	**D (mm)**	**$L_{1\ min.}$ (mm)**	**D_1 (mm)**	**K (mm)**	**MASS (mg)**
UMA 0204	3.6 + 0/- 0.2	1.4 + 0/- 0.1	1.8	D + 0/- 0.15	0.75 ± 0.1	22
UMB 0207	5.8 + 0/- 0.15	2.2 + 0/- 0.2	3.2	D + 0/- 0.2	1.15 ± 0.1	80

Notes

- Color code marking is applied according to IEC 60062 in five bands. Each color band appears as a single solid line, voids are permissible if at least $^2/_3$ of the band is visible from each radial angle of view. The last color band for tolerance is approximately 50 % wider than the other bands. An interrupted band between the 4th and 5th full band indicates the temperature coefficient (orange = TCR 15 ppm/K, blue = TCR 10 ppm/K, violet = TCR 05 ppm/K)

(1) The quoted IEC standards are also released as EN standards with the same number and identical contents

SOLDERING RECOMMENDATIONS

For recommended solder pad dimensions please refer to www.vishay.com/doc?28950.

For recommended soldering profiles please refer to www.vishay.com/doc?31090.

For technical questions, contact: melf@vishay.com
THIS DOCUMENT IS SUBJECT TO CHANGE WITHOUT NOTICE. THE PRODUCTS DESCRIBED HEREIN AND THIS DOCUMENT ARE SUBJECT TO SPECIFIC DISCLAIMERS, SET FORTH AT www.vishay.com/doc?91000

Disclaimer

ALL PRODUCT, PRODUCT SPECIFICATIONS AND DATA ARE SUBJECT TO CHANGE WITHOUT NOTICE TO IMPROVE RELIABILITY, FUNCTION OR DESIGN OR OTHERWISE.

Vishay Intertechnology, Inc., its affiliates, agents, and employees, and all persons acting on its or their behalf (collectively, “Vishay”), disclaim any and all liability for any errors, inaccuracies or incompleteness contained in any datasheet or in any other disclosure relating to any product.

Vishay makes no warranty, representation or guarantee regarding the suitability of the products for any particular purpose or the continuing production of any product. To the maximum extent permitted by applicable law, Vishay disclaims (i) any and all liability arising out of the application or use of any product, (ii) any and all liability, including without limitation special, consequential or incidental damages, and (iii) any and all implied warranties, including warranties of fitness for particular purpose, non-infringement and merchantability.

Statements regarding the suitability of products for certain types of applications are based on Vishay's knowledge of typical requirements that are often placed on Vishay products in generic applications. Such statements are not binding statements about the suitability of products for a particular application. It is the customer's responsibility to validate that a particular product with the properties described in the product specification is suitable for use in a particular application. Parameters provided in datasheets and / or specifications may vary in different applications and performance may vary over time. All operating parameters, including typical parameters, must be validated for each customer application by the customer's technical experts. Product specifications do not expand or otherwise modify Vishay's terms and conditions of purchase, including but not limited to the warranty expressed therein.

Hyperlinks included in this datasheet may direct users to third-party websites. These links are provided as a convenience and for informational purposes only. Inclusion of these hyperlinks does not constitute an endorsement or an approval by Vishay of any of the products, services or opinions of the corporation, organization or individual associated with the third-party website. Vishay disclaims any and all liability and bears no responsibility for the accuracy, legality or content of the third-party website or for that of subsequent links.

Except as expressly indicated in writing, Vishay products are not designed for use in medical, life-saving, or life-sustaining applications or for any other application in which the failure of the Vishay product could result in personal injury or death. Customers using or selling Vishay products not expressly indicated for use in such applications do so at their own risk. Please contact authorized Vishay personnel to obtain written terms and conditions regarding products designed for such applications.

No license, express or implied, by estoppel or otherwise, to any intellectual property rights is granted by this document or by any conduct of Vishay. Product names and markings noted herein may be trademarks of their respective owners.

© 2024 VISHAY INTERTECHNOLOGY, INC. ALL RIGHTS RESERVED