16 x 1 Character LCD

FEATURES

- Type: Character
- Display format: 16 x 1 characters
- Built-in controller: ST 7066 or equivalent
- Duty cycle: 1/16
- 5 x 8 dots includes cursor
- + 5 V power supply
- LED can be driven by pin 1, pin 2, pin 15, pin 16, or A and K
- Material categorization: For definitions of compliance please see www.vishay.com/doc?99912

Pb-free
RoHS COMPLIANT

MECHANICAL DATA

ITEM	STANDARD VALUE	UNIT
Module Dimension	85.0 x 28.0 x 13.5	mm
Viewing Area	66.0 x 16.0	
Dot Size	0.55 x 0.75	
Dot Pitch	0.63 x 0.83	
Mounting Hole	80.0 x 23.0	
Character Size	3.07 x 6.56	

ABSOLUTE MAXIMUM RATINGS

ITEM	SYMBOL	STANDARD VALUE			UNIT
		MIN.	TYP.	MAX.	
Power Supply	V_{DD} to V_{SS}	- 0.3	-	7.0	V
Input Voltage	V_I	V_{SS}	-	V_{DD}	

Note

- V_{SS} = 0 V, V_{DD} = 5.0 V

ELECTRICAL CHARACTERSITICS

ITEM	SYMBOL	CONDITION	STANDARD VALUE			UNIT
			MIN.	TYP.	MAX.	
Input Voltage	V_{DD}	V_{DD} = + 5 V	4.5	5.0	5.5	V
Supply Current	I_{DD}	V_{DD} = + 5 V	-	1.2	-	mA
Recommended LC Driving Voltage for Normal Temperature Version Module	V_{DD} to V_0	- 20 °C	-	-	5.5	V
		0 °C	-	-	-	
		25 °C	-	4.5	-	
		50 °C	-	-	-	
		70 °C	3.5	-	-	
LED Forward Voltage	V_F	25 °C	-	-	-	V
LED Forward Current	I_F	25 °C	-	-	-	mA
EL Power Supply Current	I_{EL}	V_{EL} = 110 V_{AC}, 400 Hz	-	-	-	mA

DISPLAY CHARACTER ADDRESS CODE

Display Position	1	2	3	4	5	6	7	8	9	10	11	12	13	14	15	16
DD RAM Address	00	01	02	03	04	05	06	07	40	41	42	43	44	45	46	47

For technical questions, contact: displays@vishay.com
THIS DOCUMENT IS SUBJECT TO CHANGE WITHOUT NOTICE. THE PRODUCTS DESCRIBED HEREIN AND THIS DOCUMENT ARE SUBJECT TO SPECIFIC DISCLAIMERS, SET FORTH AT www.vishay.com/doc?91000

INTERFACE PIN FUNCTION

PIN NO.	SYMBOL	FUNCTION
1	V_{SS}	Ground
2	V_{DD}	Supply voltage for logic (+ 5 V)
3	V_0	Operating voltage for LCD (variable)
4	RS	H/L; H: data/L: instruction code
5	R/$\overline{W}$	H/L; H: read (MPU → module)/L: write (MPU → module)
6	E	H, H → L chip enable signal
7	DB0	H/L data bus line
8	DB1	H/L data bus line
9	DB2	H/L data bus line
10	DB3	H/L data bus line
11	DB4	H/L data bus line
12	DB5	H/L data bus line
13	DB6	H/L data bus line
14	DB7	H/L data bus line

DIMENSIONS in millimeters

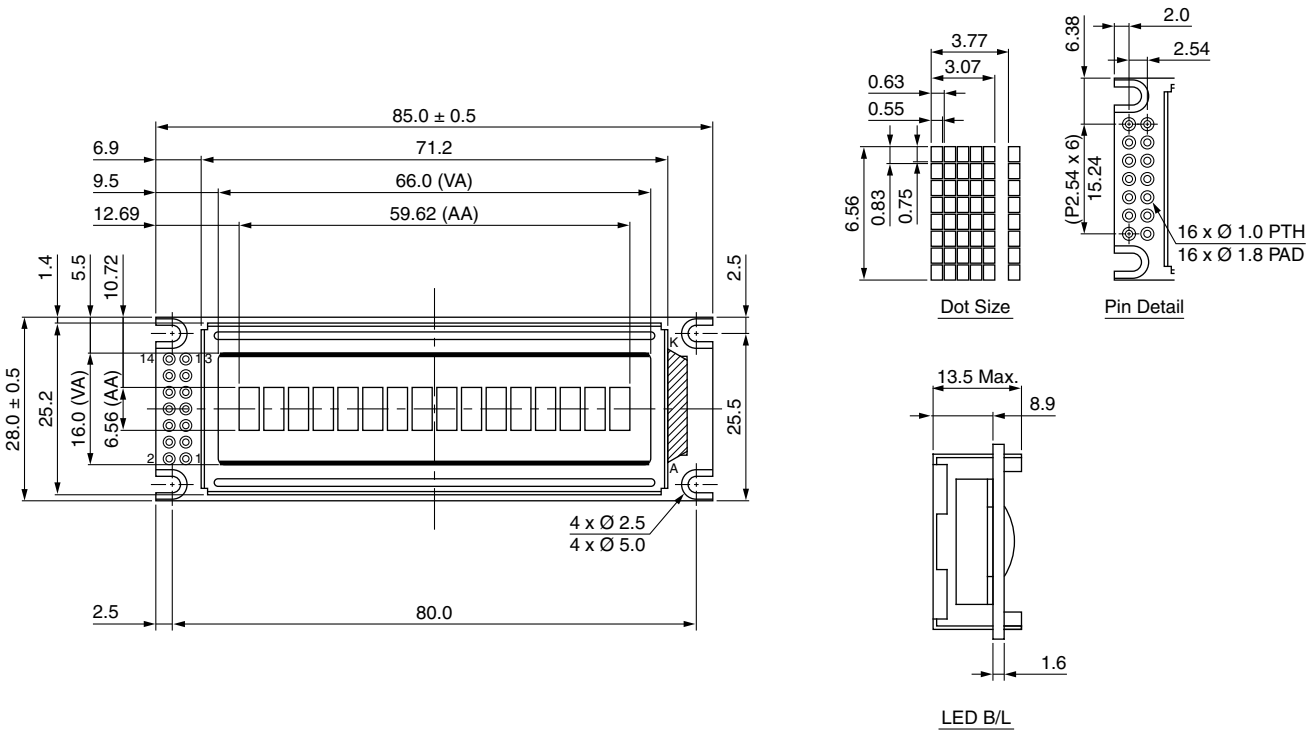

For technical questions, contact: displays@vishay.com
THIS DOCUMENT IS SUBJECT TO CHANGE WITHOUT NOTICE. THE PRODUCTS DESCRIBED HEREIN AND THIS DOCUMENT ARE SUBJECT TO SPECIFIC DISCLAIMERS, SET FORTH AT www.vishay.com/doc?91000

1.Module Classification Information

LCD	-016	N	001	B	-T	M	I	-ET
①	②	③	④	⑤	⑥	⑦	⑧	⑨

1. Brand：Vishay Intertechnology, Inc.
2. Horizontal Format: 16 characters
3. Display Type：N→Character Type, H→Graphic Type
4. Vertical Format: 1 Line
5. Model serials no.: B
6. Backlight Type：N→Without backlight, B→EL, Blue green, D→EL, Green, W→EL, White, F→CCFL, White, Y→LED, Yellow Green, T→LED, White, A→LED, Amber, R→LED, Red, O→LED, Orange, G→LED, Green
7. LCD Mode：B→TN Positive, Gray, N→TN Negative, G→STN Positive, Gray, Y→STN Positive, Yellow Green, M→STN Negative, Blue, F→FSTN Positive, T→FSTN Negative
8. LCD Polarizer Type/ Temperature range/ View direction
   - A→Reflective, N.T, 6:00
   - D→Reflective, N.T, 12:00
   - G→Reflective, W. T, 6:00
   - J→Reflective, W. T, 12:00
   - B→Transflective, N.T,6:00
   - E→Transflective, N.T.12:00
   - H→Transflective, W.T,6:00
   - K→Transflective, W.T,12:00
   - C→Transmissive, N.T,6:00
   - F→Transmissive, N.T,12:00
   - I→Transmissive, W. T, 6:00
   - L→Transmissive, W.T,12:00
9. Special Code ET : English and European standard font
   Compliant with the ROHS Directions and regulations

For technical questions, contact: displays@vishay.com
THIS DOCUMENT IS SUBJECT TO CHANGE WITHOUT NOTICE. THE PRODUCTS DESCRIBED HEREIN AND THIS DOCUMENT ARE SUBJECT TO SPECIFIC DISCLAIMERS, SET FORTH AT www.vishay.com/doc?91000

2.Precautions in use of LCD Modules

(1) Avoid applying excessive shocks to the module or making any alterations or modifications to it.

(2) Don't make extra holes on the printed circuit board, modify its shape or change the components of LCD module.

(3) Don't disassemble the LCM.

(4) Don't operate it above the absolute maximum rating.

(5) Don't drop, bend or twist LCM.

(6) Soldering: only to the I/O terminals.

(7) Storage: please storage in anti-static electricity container and clean environment.

(8) Supplier has the right to change the passive components

(9) Supplier has the right to change the PCB Rev.

3.General Specification

ITEM	STANDARD VALUE	UNIT
Number of Characters:	16 characters×1 Lines	
Module dimension:	85.0×28.0×13.5(MAX)mm	mm
View area:	66.0×16.0mm	mm
Active area:	59.62×6.56mm	mm
Dots size:	(L)0.55×(W)0.75mm	
Dots pitch:	(L)0.63×(W)0.83mm	
Character size:	(L)3.07×(W)6.56mm	mm
Character pitch:	(L)3.77×(W)6.56mm	mm
LCD type:	STN Negative, Blue Transmissive (In LCD production, It will occur slightly color difference. We can only guarantee the same color in the same batch.)	
Duty:	1/16	
View direction:	6 o'clock	
Backlight Type	LED White	

For technical questions, contact: displays@vishay.com
THIS DOCUMENT IS SUBJECT TO CHANGE WITHOUT NOTICE. THE PRODUCTS DESCRIBED HEREIN AND THIS DOCUMENT ARE SUBJECT TO SPECIFIC DISCLAIMERS, SET FORTH AT www.vishay.com/doc?91000

4.Absolute Maximum Ratings

ITEM	SYMBOL	MIN.	TYP.	MAX.	UNIT
Operating Temperature	T_{OP}	-20	—	+70	℃
Storage Temperature	T_{ST}	-30	—	+80	℃
Input Voltage	V_I	V_{SS}	—	V_{DD}	V
Supply Voltage For Logic	V_{DD}-V_{SS}	-0.3	—	7	V
Supply Voltage For LCD	V_{DD}-V_0	-0.3	—	13	V

5.Electrical Characteristics

ITEM	SYMBOL	CONDITION	MIN.	TYP.	MAX.	UNIT
Supply Voltage For Logic	V_{DD}-V_{SS}	—	4.5	5.0	5.5	V
Supply Voltage For LCD *Note	V_{DD}-V_0	Ta=-20℃	—	—	5.5	V
		Ta=25℃	—	4.5	—	V
		Ta=70℃	3.5	—	—	V
Input High Vol	V_{IH}	—	0.7 V_{DD}	—	V_{DD}	V
Input Low Vol	V_{IL}	—	V_{SS}	—	0.6	V
Output High Vol	V_{OH}	—	3.9	—	—	V
Output Low Vol.	V_{OL}	—	—	—	0.4	V
Supply Current	I_{DD}	V_{DD}=5V	—	1.2	—	mA

* Note: Please design the VOP adjustment circuit on customer's main board

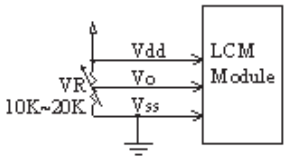

For technical questions, contact: displays@vishay.com
THIS DOCUMENT IS SUBJECT TO CHANGE WITHOUT NOTICE. THE PRODUCTS DESCRIBED HEREIN AND THIS DOCUMENT ARE SUBJECT TO SPECIFIC DISCLAIMERS, SET FORTH AT www.vishay.com/doc?91000

6.Optical Characteristics

ITEM	SYMBAL	CONDITION	MIN.	TYP.	MAX.	UNIT
View Angle	(V) θ	CR≧2	20		40	deg
	(H) φ	CR≧2	-30		30	deg
Contrast Ratio	CR	—		3		—
Response Time	T rise	—		100	150	ms
	T fall	—		100	150	ms

6.1 Definitions

■View Angles

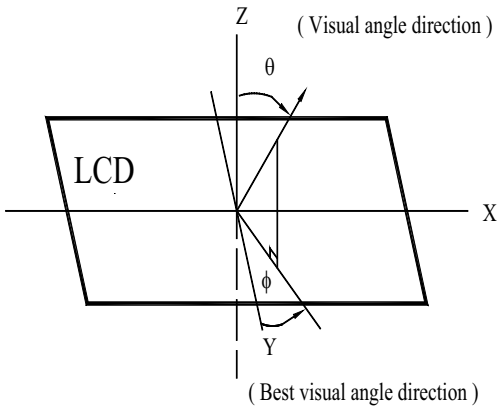

■Contrast Ratio

$$CR = \frac{\text{Brightness at selected state (BS)}}{\text{Brightness at non-selected state (Bns)}}$$

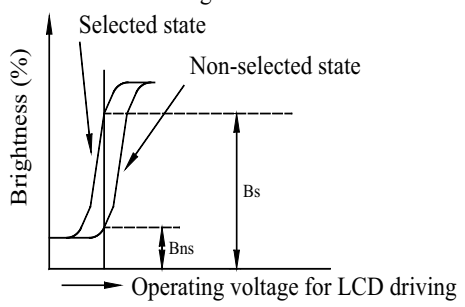

■Response Time

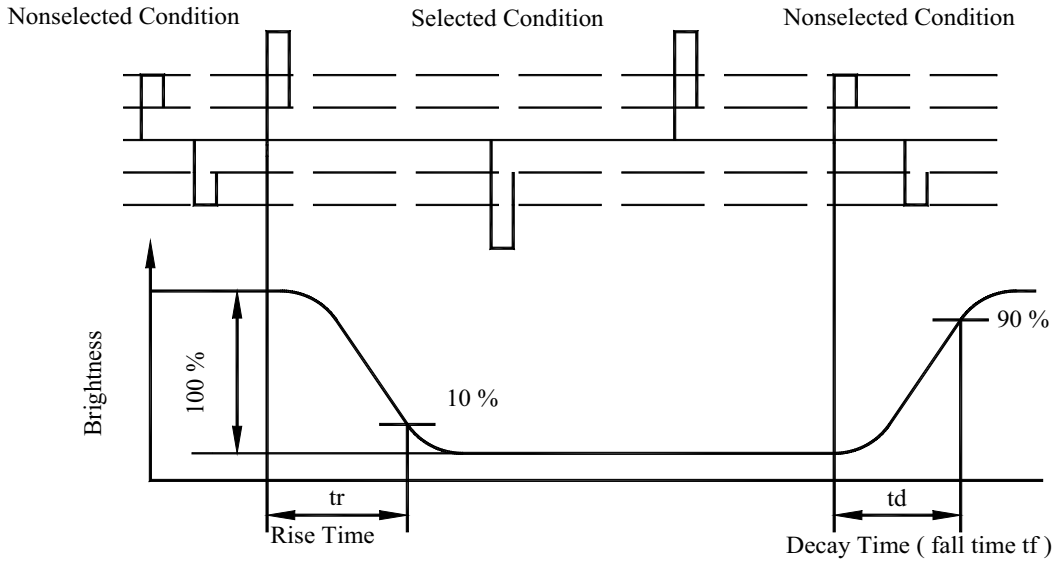

For technical questions, contact: displays@vishay.com
THIS DOCUMENT IS SUBJECT TO CHANGE WITHOUT NOTICE. THE PRODUCTS DESCRIBED HEREIN AND THIS DOCUMENT ARE SUBJECT TO SPECIFIC DISCLAIMERS, SET FORTH AT www.vishay.com/doc?91000

7.Interface Pin Function

Pin No.	Symbol	Level	Description
1	V_{SS}	0V	Ground
2	V_{DD}	5.0V	Supply Voltage for logic
3	VO	(Variable)	Operating voltage for LCD
4	RS	H/L	H:DATA, L:Instruction code
5	R/W	H/L	H:Read(MPU→Module)L:Write(MPU→Module)
6	E	H,H→L	Chip enable signal
7	DB0	H/L	Data bus line
8	DB1	H/L	Data bus line
9	DB2	H/L	Data bus line
10	DB3	H/L	Data bus line
11	DB4	H/L	Data bus line
12	DB5	H/L	Data bus line
13	DB6	H/L	Data bus line
14	DB7	H/L	Data bus line

For technical questions, contact: displays@vishay.com
THIS DOCUMENT IS SUBJECT TO CHANGE WITHOUT NOTICE. THE PRODUCTS DESCRIBED HEREIN AND THIS DOCUMENT ARE SUBJECT TO SPECIFIC DISCLAIMERS, SET FORTH AT www.vishay.com/doc?91000

8.Contour Drawing & Block Diagram

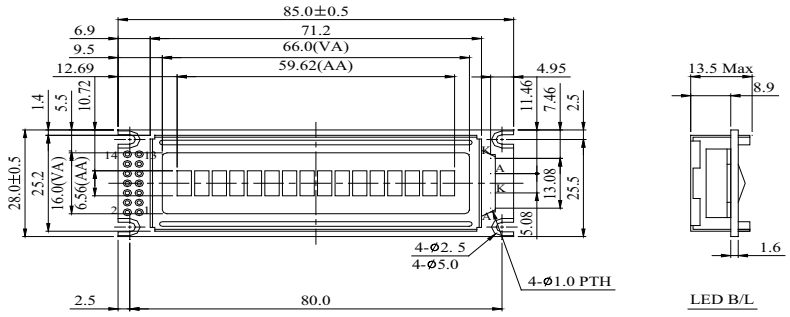

PIN NO.	SYMBOL
1	Vss
2	Vdd
3	Vo
4	RS
5	R/$\overline{W}$
6	E
7	DB0
8	DB1
9	DB2
10	DB3
11	DB4
12	DB5
13	DB6
14	DB7

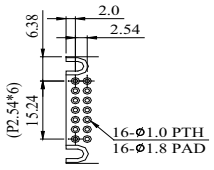

PIN DETAIL

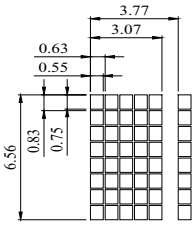

DOT SIZE
SCALE 5/1

The non-specified tolerance of dimension is ¡ ÒÀ3 mm .

For technical questions, contact: displays@vishay.com
THIS DOCUMENT IS SUBJECT TO CHANGE WITHOUT NOTICE. THE PRODUCTS DESCRIBED HEREIN AND THIS DOCUMENT ARE SUBJECT TO SPECIFIC DISCLAIMERS, SET FORTH AT www.vishay.com/doc?91000

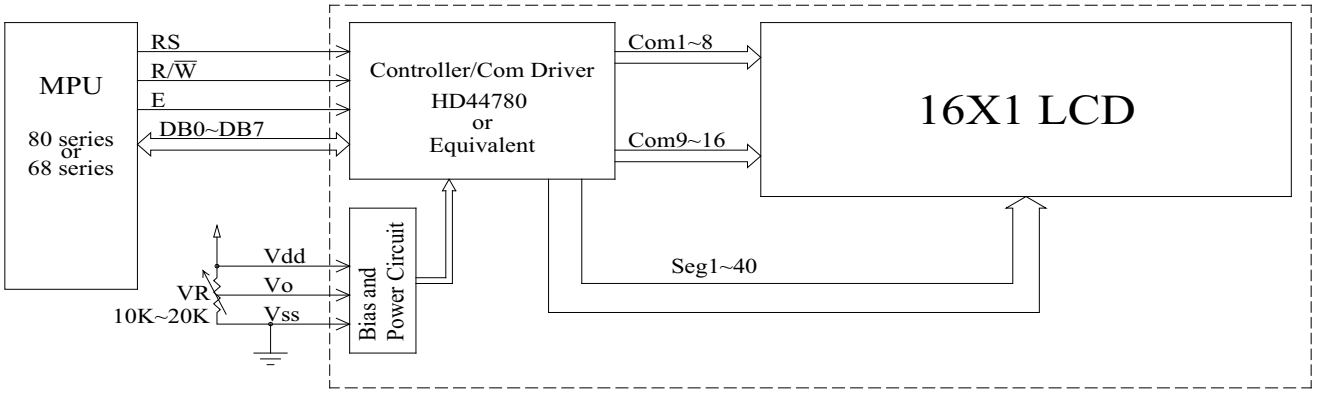

External contrast adjustment.

Character located	1	2	3	4	5	6	7	8	9	10	11	12	13	14	15	16
DDRAM address	00	01	02	03	04	05	06	07	40	41	42	43	44	45	46	47

2-line display mode.

For technical questions, contact: displays@vishay.com
THIS DOCUMENT IS SUBJECT TO CHANGE WITHOUT NOTICE. THE PRODUCTS DESCRIBED HEREIN AND THIS DOCUMENT ARE SUBJECT TO SPECIFIC DISCLAIMERS, SET FORTH AT www.vishay.com/doc?91000

9.Function Description

The LCD display Module is built in a LSI controller, the controller has two 8-bit registers, an instruction register (IR) and a data register (DR).

The IR stores instruction codes, such as display clear and cursor shift, and address information for display data RAM (DDRAM) and character generator (CGRAM). The IR can only be written from the MPU. The DR temporarily stores data to be written or read from DDRAM or CGRAM. When address information is written into the IR, then data is stored into the DR from DDRAM or CGRAM. By the register selector (RS) signal, these two registers can be selected.

RS	R/W	Operation
0	0	IR write as an internal operation (display clear, etc.)
0	1	Read busy flag (DB7) and address counter (DB0 to DB7)
1	0	Write data to DDRAM or CGRAM (DR to DDRAM or CGRAM)
1	1	Read data from DDRAM or CGRAM (DDRAM or CGRAM to DR)

Busy Flag (BF)

When the busy flag is 1, the controller LSI is in the internal operation mode, and the next instruction will not be accepted. When RS=0 and R/W=1, the busy flag is output to DB7. The next instruction must be written after ensuring that the busy flag is 0.

Address Counter (AC)

The address counter (AC) assigns addresses to both DDRAM and CGRAM

Display Data RAM (DDRAM)

This DDRAM is used to store the display data represented in 8-bit character codes. Its extended capacity is 80×8 bits or 80 characters. Below figure is the relationship between DDRAM addresses and positions on the liquid crystal display.

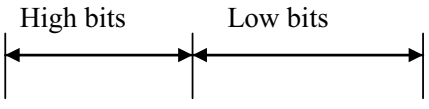

Example: DRAM addresses 4E

For technical questions, contact: displays@vishay.com
THIS DOCUMENT IS SUBJECT TO CHANGE WITHOUT NOTICE. THE PRODUCTS DESCRIBED HEREIN AND THIS DOCUMENT ARE SUBJECT TO SPECIFIC DISCLAIMERS, SET FORTH AT www.vishay.com/doc?91000

AC (hexadecimal)	AC6	AC5	AC4	AC3	AC2	AC1	AC0		1	0	0	1	1	1	0

DDRAM Address

Display position DDRAM address

1	2	3	4	5	6	7	8	9	10	11	12	13	14	15	16
00	01	02	03	04	05	06	07	40	41	42	43	44	45	46	47

1-Line by 16-Character Display

Character Generator ROM (CGROM)

The CGROM generate 5×8 dot or 5×10 dot character patterns from 8-bit character codes. See Table 2.

Character Generator RAM (CGRAM)

In CGRAM, the user can rewrite character by program. For 5×8 dots, eight character patterns can be written, and for 5×10 dots, four character patterns can be written.

Write into DDRAM the character code at the addresses shown as the left column of table 1. To show the character patterns stored in CGRAM.

For technical questions, contact: displays@vishay.com
THIS DOCUMENT IS SUBJECT TO CHANGE WITHOUT NOTICE. THE PRODUCTS DESCRIBED HEREIN AND THIS DOCUMENT ARE SUBJECT TO SPECIFIC DISCLAIMERS, SET FORTH AT www.vishay.com/doc?91000

Relationship between CGRAM Addresses, Character Codes (DDRAM) and Character patterns

Table 1.

For 5 * 8 dot character patterns

Character Codes (DDRAM data)	CGRAM Address		Character Patterns (CGRAM data)		
7 6 5 4 3 2 1 0 High Low	5 4 3 2 1 0 High Low		7 6 5 4 3 2 1 0 High Low		
0 0 0 0 * 0 0 0	0 0 0	0 0 0	* * *	■ ■ ■ ■ 0	Character pattern(1)
		0 0 1	* * *	■ 0 0 0 ■	
		0 1 0	* * *	■ 0 0 0 ■	
		0 1 1	* * *	■ ■ ■ ■ 0	
		1 0 0	* * *	■ 0 ■ 0 0	
		1 0 1	* * *	■ 0 0 ■ 0	
		1 1 0	* * *	■ 0 0 0 ■	
		1 1 1	* * *	0 0 0 0 0	Cursor pattern
0 0 0 0 * 0 0 1	0 0 1	0 0 0	* * *	■ 0 0 0 ■	Character pattern(2)
		0 0 1	* * *	0 ■ 0 ■ 0	
		0 1 0	* * *	■ ■ ■ ■ ■	
		0 1 1	* * *	0 0 ■ 0 0	
		1 0 0	* * *	■ ■ ■ ■ ■	
		1 0 1	* * *	0 0 ■ 0 0	
		1 1 0	* * *	0 0 ■ 0 0	
		1 1 1	* * *	0 0 0 0 0	Cursor pattern
		0 0 0	* * *		
		0 0 1			
0 0 0 0 * 1 1 1	1 1 1	1 0 0			
		1 0 1			
		1 1 0			
		1 1 1	* * *		

For 5 * 10 dot character patterns

Character Codes (DDRAM data)	CGRAM Address			Character Patterns (CGRAM data)		
7 6 5 4 3 2 1 0 High Low	5 4 3 2 1 0 High Low			7 6 5 4 3 2 1 0 High Low		
0 0 0 0 * 0 0 0	0 0	0 0 0 0		* * *	0 0 0 0 0	Character pattern
		0 0 0 1		* * *	0 0 0 0 0	
		0 0 1 0		* * *	■ 0 ■ ■ 0	
		0 0 1 1		* * *	■ ■ 0 0 ■	
		0 1 0 0		* * *	■ 0 0 0 ■	
		0 1 0 1		* * *	■ 0 0 0 ■	
		0 1 1 0		* * *	■ ■ ■ ■ 0	
		0 1 1 1		* * *	■ 0 0 0 0	
		1 0 0 0		* * *	■ 0 0 0 0	
		1 0 0 1		* * *	■ 0 0 0 0	
		1 0 1 0		* * *	0 0 0 0 0	Cursor pattern
		1 1 1 1		* * *	* * * * *	

■ : " High "

For technical questions, contact: displays@vishay.com
THIS DOCUMENT IS SUBJECT TO CHANGE WITHOUT NOTICE. THE PRODUCTS DESCRIBED HEREIN AND THIS DOCUMENT ARE SUBJECT TO SPECIFIC DISCLAIMERS, SET FORTH AT www.vishay.com/doc?91000

10.Character Generator ROM Pattern

Table.2

Upper 4 bit / Lower 4 bit	LLLL	LLLH	LLHL	LLHH	LHLL	LHLH	LHHL	LHHH	HLLL	HLLH	HLHL	HLHH	HHLL	HHLH	HHHL	HHHH
LLLL	CG RAM (1)															
LLLH	CG RAM (2)															
LLHL	CG RAM (3)															
LLHH	CG RAM (4)															
LHLL	CG RAM (5)															
LHLH	CG RAM (6)															
LHHL	CG RAM (7)															
LHHH	CG RAM (8)															
HLLL	CG RAM (1)															
HLLH	CG RAM (2)															
HLHL	CG RAM (3)															
HLHH	CG RAM (4)															
HHLL	CG RAM (5)															
HHLH	CG RAM (6)															
HHHL	CG RAM (7)															
HHHH	CG RAM (8)															

For technical questions, contact: displays@vishay.com
THIS DOCUMENT IS SUBJECT TO CHANGE WITHOUT NOTICE. THE PRODUCTS DESCRIBED HEREIN AND THIS DOCUMENT ARE SUBJECT TO SPECIFIC DISCLAIMERS, SET FORTH AT www.vishay.com/doc?91000

11.Instruction Table

Instruction	Instruction Code										Description	Execution time (fosc=270Khz)
	RS	R/W	DB7	DB6	DB5	DB4	DB3	DB2	DB1	DB0		
Clear Display	0	0	0	0	0	0	0	0	0	1	Write “00H” to DDRAM and set DDRAM address to “00H” from AC	1.53ms
Return Home	0	0	0	0	0	0	0	0	1	—	Set DDRAM address to “00H” from AC and return cursor to its original position if shifted. The contents of DDRAM are not changed.	1.53ms
Entry Mode Set	0	0	0	0	0	0	0	1	I/D	SH	Assign cursor moving direction and enable the shift of entire display.	39 μs
Display ON/OFF Control	0	0	0	0	0	0	1	D	C	B	Set display (D), cursor (C), and blinking of cursor (B) on/off control bit.	39 μs
Cursor or Display Shift	0	0	0	0	0	1	S/C	R/L	—	—	Set cursor moving and display shift control bit, and the direction, without changing of DDRAM data.	39 μs
Function Set	0	0	0	0	1	DL	N	F	—	—	Set interface data length (DL:8-bit/4-bit), numbers of display line (N:2-line/1-line)and, display font type (F:5×11 dots/5×8 dots)	39 μs
Set CGRAM Address	0	0	0	1	AC5	AC4	AC3	AC2	AC1	AC0	Set CGRAM address in address counter.	39 μs
Set DDRAM Address	0	0	1	AC6	AC5	AC4	AC3	AC2	AC1	AC0	Set DDRAM address in address counter.	39 μs
Read Busy Flag and Address	0	1	BF	AC6	AC5	AC4	AC3	AC2	AC1	AC0	Whether during internal operation or not can be known by reading BF. The contents of address counter can also be read.	0 μs
Write Data to RAM	1	0	D7	D6	D5	D4	D3	D2	D1	D0	Write data into internal RAM (DDRAM/CGRAM).	43 μs
Read Data from RAM	1	1	D7	D6	D5	D4	D3	D2	D1	D0	Read data from internal RAM (DDRAM/CGRAM).	43 μs

＊ ”—”：don’t care

For technical questions, contact: displays@vishay.com
THIS DOCUMENT IS SUBJECT TO CHANGE WITHOUT NOTICE. THE PRODUCTS DESCRIBED HEREIN AND THIS DOCUMENT ARE SUBJECT TO SPECIFIC DISCLAIMERS, SET FORTH AT www.vishay.com/doc?91000

12.Timing Characteristics

12.1 Write Operation

- Writing data from MPU

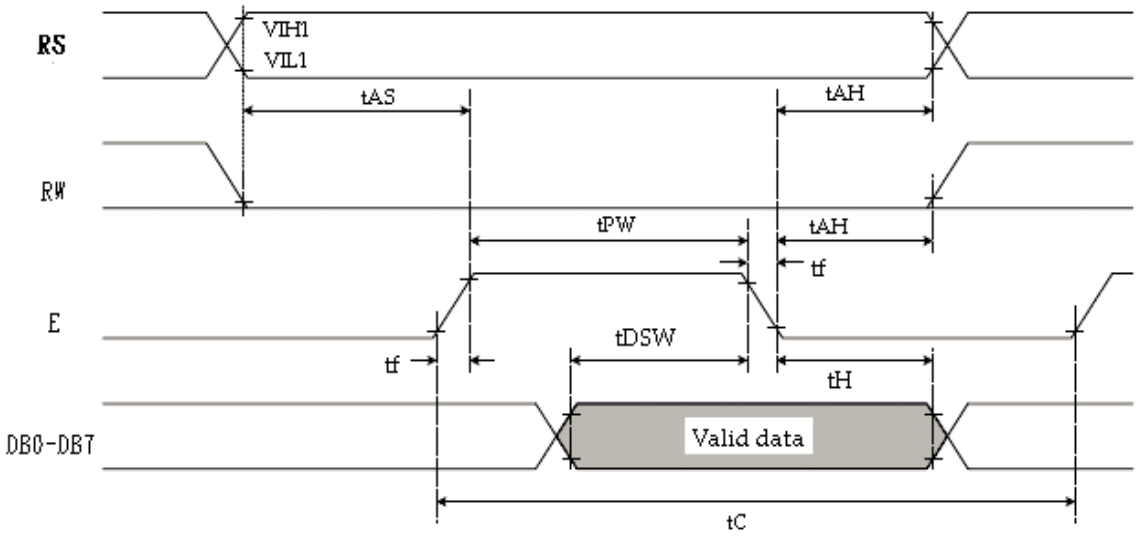

Ta=25℃, VDD=5.0V

Item	Symbol	Min	Typ	Max	Unit
Enable cycle time	T_C	1200	—	—	ns
Enable pulse width	T_{PW}	140	—	—	ns
Enable rise/fall time	T_R,T_F	—	—	25	ns
Address set-up time (RS, R/W to E)	t_{AS}	0	—	—	ns
Address hold time	t_{AH}	10	—	—	ns
Data set-up time	t_{DSW}	40	—	—	ns
Data hold time	t_H	10	—	—	ns

For technical questions, contact: displays@vishay.com
THIS DOCUMENT IS SUBJECT TO CHANGE WITHOUT NOTICE. THE PRODUCTS DESCRIBED HEREIN AND THIS DOCUMENT ARE SUBJECT TO SPECIFIC DISCLAIMERS, SET FORTH AT www.vishay.com/doc?91000

12.2 Read Operation

- Reading data from ST7066U

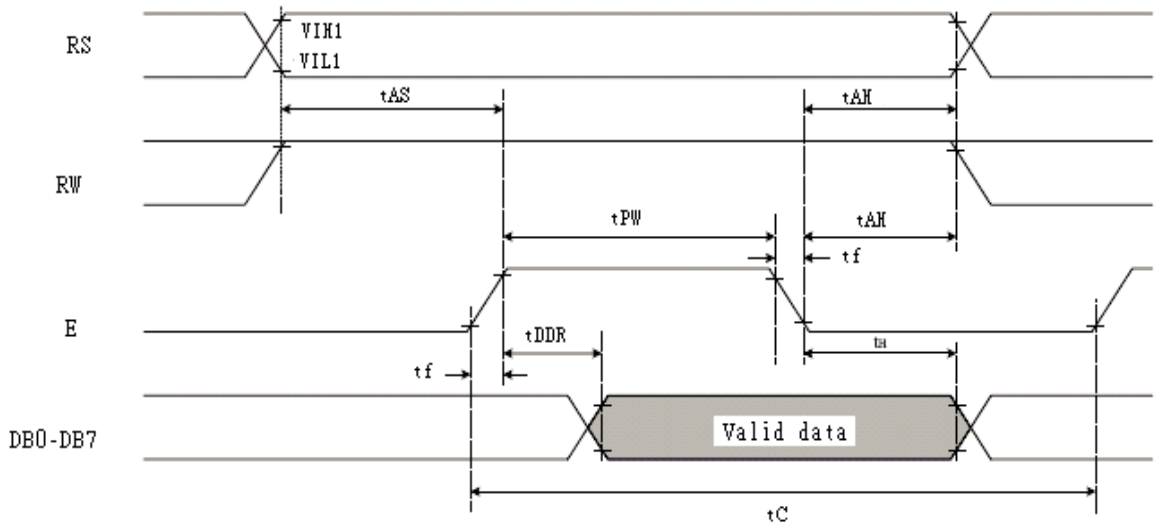

Ta=25℃, VDD=5V

Item	Symbol	Min	Typ	Max	Unit
Enable cycle time	T_C	1200	—	—	ns
Enable pulse width (high level)	T_{PW}	140	—	—	ns
Enable rise/fall time	T_R,T_F	—	—	25	ns
Address set-up time (RS, R/W to E)	t_{AS}	0	—	—	ns
Address hold time	t_{AH}	10	—	—	ns
Data delay time	t_{DDR}	—	—	100	ns
Data hold time	t_H	10	—	—	ns

For technical questions, contact: displays@vishay.com
THIS DOCUMENT IS SUBJECT TO CHANGE WITHOUT NOTICE. THE PRODUCTS DESCRIBED HEREIN AND THIS DOCUMENT ARE SUBJECT TO SPECIFIC DISCLAIMERS, SET FORTH AT www.vishay.com/doc?91000

13.Initializing of LCM

Power on

Wait for more than 40 ms after V_{DD} rises to 4.5 V

BF can not be checked before this instruction.

RS	R/$\overline{W}$	DB7	DB6	DB5	DB4	DB3	DB2	DB1	DB0
0	0	0	0	1	1	*	*	*	*

Function set

Wait for more than 39us

BF can not be checked before this instruction.

RS	R/$\overline{W}$	DB7	DB6	DB5	DB4	DB3	DB2	DB1	DB0
0	0	0	0	1	0	*	*	*	*
0	0	N	F	*	*	*	*	*	*

Function set

Wait for more than 39 µs

BF can not be checked before this instruction.

RS	R/$\overline{W}$	DB7	DB6	DB5	DB4	DB3	DB2	DB1	DB0
0	0	0	0	1	0	*	*	*	*
0	0	N	F	*	*	*	*	*	*

Function set

Wait for more than 37us

RS	R/$\overline{W}$	DB7	DB6	DB5	DB4	DB3	DB2	DB1	DB0
0	0	0	0	0	0	*	*	*	*
0	0	1	D	C	B	*	*	*	*

Display ON/OFF control

Wait for more than 37 µs

RS	R/$\overline{W}$	DB7	DB6	DB5	DB4	DB3	DB2	DB1	DB0
0	0	0	0	0	0	*	*	*	*
0	0	0	0	0	1	*	*	*	*

Display Clear

Wait for more than 1.53 ms

RS	R/$\overline{W}$	DB7	DB6	DB5	DB4	DB3	DB2	DB1	DB0
0	0	0	0	0	0	*	*	*	*
0	0	0	1	I/D	SH	*	*	*	*

Entry Mode Set

Initialization ends

4-Bit Ineterface

For technical questions, contact: displays@vishay.com
THIS DOCUMENT IS SUBJECT TO CHANGE WITHOUT NOTICE. THE PRODUCTS DESCRIBED HEREIN AND THIS DOCUMENT ARE SUBJECT TO SPECIFIC DISCLAIMERS, SET FORTH AT www.vishay.com/doc?91000

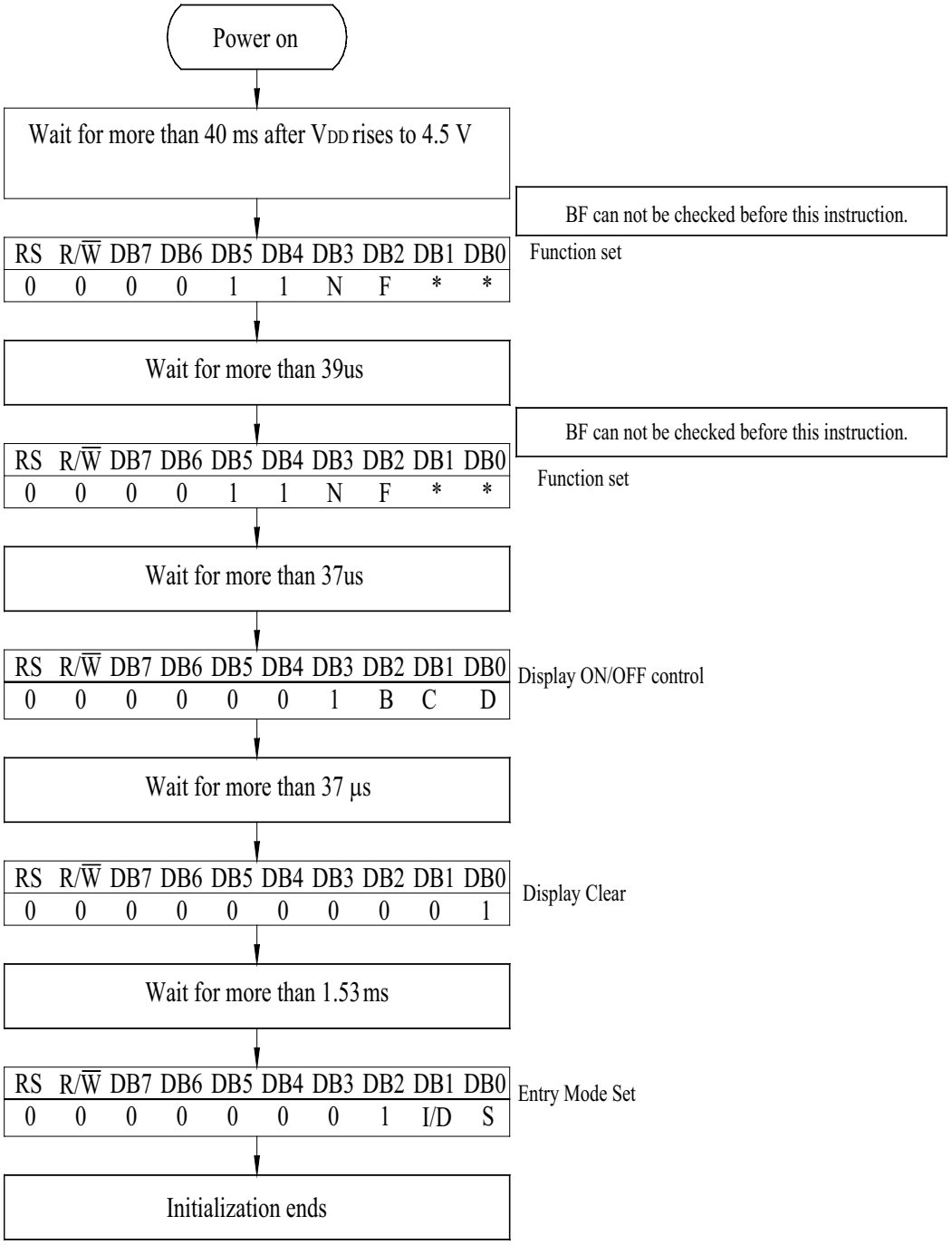

8-Bit Ineterface

For technical questions, contact: displays@vishay.com
THIS DOCUMENT IS SUBJECT TO CHANGE WITHOUT NOTICE. THE PRODUCTS DESCRIBED HEREIN AND THIS DOCUMENT ARE SUBJECT TO SPECIFIC DISCLAIMERS, SET FORTH AT www.vishay.com/doc?91000

14.Reliability

Content of Reliability Test (wide temperature, -20℃~70℃)

Environmental Test			
Test Item	**Content of Test**	**Test Condition**	**Note**
High Temperature storage	Endurance test applying the high storage temperature for a long time.	80℃ 200hrs	2
Low Temperature storage	Endurance test applying the high storage temperature for a long time.	-30℃ 200hrs	1,2
High Temperature Operation	Endurance test applying the electric stress (Voltage & Current) and the thermal stress to the element for a long time.	70℃ 200hrs	——
Low Temperature Operation	Endurance test applying the electric stress under low temperature for a long time.	-20℃ 200hrs	1
High Temperature/ Humidity Operation	The module should be allowed to stand at 60 ℃,90%RH max For 96hrs under no-load condition excluding the polarizer, Then taking it out and drying it at normal temperature.	60℃,90%RH 96hrs	1,2
Thermal shock resistance	The sample should be allowed stand the following 10 cycles of operation -20℃ 25℃ 70℃ 30min 5min 30min 1 cycle	-20℃/70℃ 10 cycles	——
Vibration test	Endurance test applying the vibration during transportation and using.	Total fixed amplitude : 1.5mm Vibration Frequency : 10~55Hz One cycle 60 seconds to 3 directions of X,Y,Z for Each 15 minutes	3
Static electricity test	Endurance test applying the electric stress to the terminal.	VS=800V,RS=1.5kΩ CS=100pF 1 time	——

Note1: No dew condensation to be observed.

Note2: The function test shall be conducted after 4 hours storage at the normal Temperature and humidity after remove from the test chamber.

For technical questions, contact: displays@vishay.com
THIS DOCUMENT IS SUBJECT TO CHANGE WITHOUT NOTICE. THE PRODUCTS DESCRIBED HEREIN AND THIS DOCUMENT ARE SUBJECT TO SPECIFIC DISCLAIMERS, SET FORTH AT www.vishay.com/doc?91000

15.Backlight Information

Specification

PARAMETER	SYMBOL	MIN	TYP	MAX	UNIT	TEST CONDITION
Supply Current	ILED	14.4	16	20	mA	V=3.5V
Supply Voltage	V	3.4	3.5	3.6	V	—
Reverse Voltage	VR	—	—	5	V	—
Luminous Intensity	IV	264	330	—	CD/M^2	ILED=16mA
Wave Length	λp	—	—	—	nm	ILED =16mA
LED Life Time (For Reference only)	—	—	50K	—	Hr.	ILED≦16mA 25℃, 50-60%RH, (Note 1)
Color	White					

Note: The LED of B/L is drive by current only, drive voltage is for reference only. drive voltage can make driving current under safety area (current between minimum and maximum).

Note 1:50K hours is only an estimate for reference.

LED B\L Drive Method

1.Drive from A , K

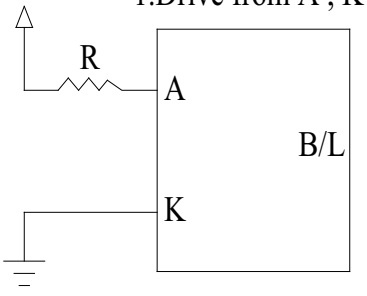

For technical questions, contact: displays@vishay.com
THIS DOCUMENT IS SUBJECT TO CHANGE WITHOUT NOTICE. THE PRODUCTS DESCRIBED HEREIN AND THIS DOCUMENT ARE SUBJECT TO SPECIFIC DISCLAIMERS, SET FORTH AT www.vishay.com/doc?91000

16.Inspection Specification

<table>
<tr><th>NO</th><th>Item</th><th>Criterion</th><th>AQL</th></tr>
<tr><td>01</td><td>Electrical Testing</td><td>1.1 Missing vertical, horizontal segment, segment contrast defect.
1.2 Missing character , dot or icon.
1.3 Display malfunction.
1.4 No function or no display.
1.5 Current consumption exceeds product specifications.
1.6 LCD viewing angle defect.
1.7 Mixed product types.
1.8 Contrast defect.</td><td>0.65</td></tr>
<tr><td>02</td><td>Black or white spots on LCD (display only)</td><td>2.1 White and black spots on display ≦0.25mm, no more than three white or black spots present.
2.2 Densely spaced: No more than two spots or lines within 3mm</td><td>2.5</td></tr>
<tr><td rowspan="2">03</td><td rowspan="2">LCD black spots, white spots, contamination (non-display)</td><td>3.1 Round type : As following drawing
Φ=(x + y) / 2
 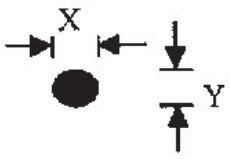

<table>
<tr><th>SIZE</th><th>Acceptable Q TY</th></tr>
<tr><td>Φ ≦0.10</td><td>Accept no dense</td></tr>
<tr><td>0.10＜Φ ≦0.20</td><td>2</td></tr>
<tr><td>0.20＜Φ ≦0.25</td><td>1</td></tr>
<tr><td>0.25＜Φ</td><td>0</td></tr>
</table></td><td>2.5</td></tr>
<tr><td>3.2 Line type : (As following drawing)
 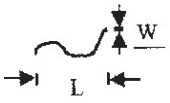

<table>
<tr><th>Length</th><th>Width</th><th>Acceptable Q TY</th></tr>
<tr><td>---</td><td>W≦0.02</td><td>Accept no dense</td></tr>
<tr><td>L≦3.0</td><td>0.02＜W≦0.03</td><td rowspan="2">2</td></tr>
<tr><td>L≦2.5</td><td>0.03＜W≦0.05</td></tr>
<tr><td>---</td><td>0.05＜W</td><td>As round type</td></tr>
</table></td><td>2.5</td></tr>
<tr><td>04</td><td>Polarizer bubbles</td><td>If bubbles are visible, judge using black spot specifications, not easy to find, must check in specify direction.
<table>
<tr><th>Size Φ</th><th>Acceptable Q TY</th></tr>
<tr><td>Φ ≦0.20</td><td>Accept no dense</td></tr>
<tr><td>0.20＜Φ ≦0.50</td><td>3</td></tr>
<tr><td>0.50＜Φ ≦1.00</td><td>2</td></tr>
<tr><td>1.00＜Φ</td><td>0</td></tr>
<tr><td>Total Q TY</td><td>3</td></tr>
</table></td><td>2.5</td></tr>
</table>

For technical questions, contact: displays@vishay.com
THIS DOCUMENT IS SUBJECT TO CHANGE WITHOUT NOTICE. THE PRODUCTS DESCRIBED HEREIN AND THIS DOCUMENT ARE SUBJECT TO SPECIFIC DISCLAIMERS, SET FORTH AT www.vishay.com/doc?91000

<table>
<tr><th>NO</th><th>Item</th><th>Criterion</th><th>AQL</th></tr>
<tr><td>05</td><td>Scratches</td><td>Follow NO.3 LCD black spots, white spots, contamination</td><td></td></tr>
<tr><td>06</td><td>Chipped glass</td><td>
Symbols Define:
x: Chip length y: Chip width z: Chip thickness
k: Seal width t: Glass thickness a: LCD side length
L: Electrode pad length:

6.1 General glass chip :
6.1.1 Chip on panel surface and crack between panels:
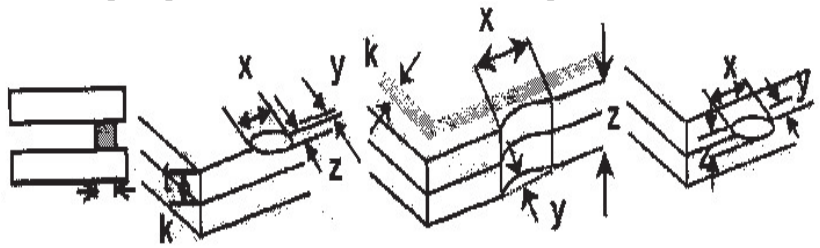

<table>
<tr><th>z: Chip thickness</th><th>y: Chip width</th><th>x: Chip length</th></tr>
<tr><td>Z≦1/2t</td><td>Not over viewing area</td><td>x≦1/8a</td></tr>
<tr><td>1/2t＜z≦2t</td><td>Not exceed 1/3k</td><td>x≦1/8a</td></tr>
</table>
⊙If there are 2 or more chips, x is total length of each chip.

6.1.2 Corner crack:
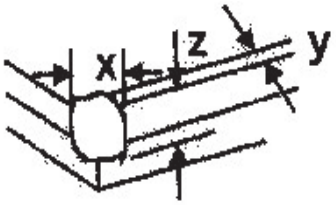

<table>
<tr><th>z: Chip thickness</th><th>y: Chip width</th><th>x: Chip length</th></tr>
<tr><td>Z≦1/2t</td><td>Not over viewing area</td><td>x≦1/8a</td></tr>
<tr><td>1/2t＜z≦2t</td><td>Not exceed 1/3k</td><td>x≦1/8a</td></tr>
</table>
⊙If there are 2 or more chips, x is the total length of each chip.
</td><td>2.5</td></tr>
</table>

For technical questions, contact: displays@vishay.com
THIS DOCUMENT IS SUBJECT TO CHANGE WITHOUT NOTICE. THE PRODUCTS DESCRIBED HEREIN AND THIS DOCUMENT ARE SUBJECT TO SPECIFIC DISCLAIMERS, SET FORTH AT www.vishay.com/doc?91000

<table>
<tr><th>NO</th><th>Item</th><th>Criterion</th><th>AQL</th></tr>
<tr><td>06</td><td>Glass crack</td><td>
Symbols :
x: Chip length y: Chip width z: Chip thickness
k: Seal width t: Glass thickness a: LCD side length
L: Electrode pad length
6.2 Protrusion over terminal :
6.2.1 Chip on electrode pad :
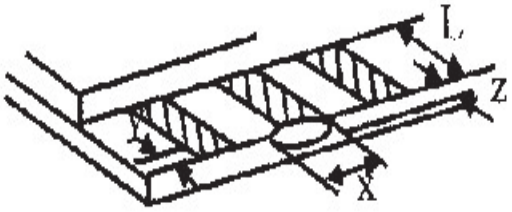

<table>
<tr><td>y: Chip width</td><td>x: Chip length</td><td>z: Chip thickness</td></tr>
<tr><td>y≦0.5mm</td><td>x≦1/8a</td><td>0 ＜ z ≦ t</td></tr>
</table>
6.2.2 Non-conductive portion:
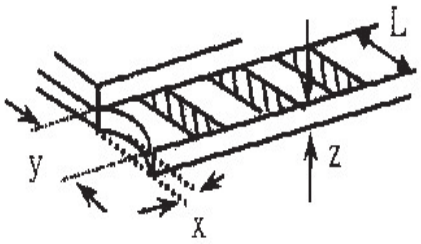

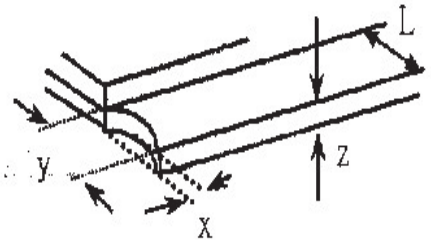

<table>
<tr><td>y: Chip width</td><td>x: Chip length</td><td>z: Chip thickness</td></tr>
<tr><td>y≦ L</td><td>x≦1/8a</td><td>0 ＜ z ≦ t</td></tr>
</table>
⊙If the chipped area touches the ITO terminal, over 2/3 of the ITO must remain and be inspected according to electrode terminal specifications.
⊙If the product will be heat sealed by the customer, the alignment mark not be damaged.
6.2.3 Substrate protuberance and internal crack.
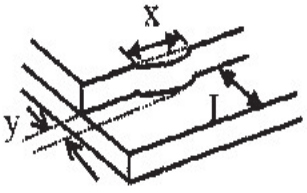

<table>
<tr><td>y: width</td><td>x: length</td></tr>
<tr><td>y≦1/3L</td><td>x ≦ a</td></tr>
</table>
</td><td>2.5</td></tr>
</table>

THIS DOCUMENT IS SUBJECT TO CHANGE WITHOUT NOTICE. THE PRODUCTS DESCRIBED HEREIN AND THIS DOCUMENT ARE SUBJECT TO SPECIFIC DISCLAIMERS, SET FORTH AT www.vishay.com/doc?91000

NO	Item	Criterion	AQL
07	Cracked glass	The LCD with extensive crack is not acceptable.	2.5
08	Backlight elements	8.1 Illumination source flickers when lit. 8.2 Spots or scratched that appear when lit must be judged. Using LCD spot, lines and contamination standards. 8.3 Backlight doesn’ t’ t light or color wrong.	0.65 2.5 0.65
09	Bezel	9.1 Bezel may not have rust, be deformed or have fingerprints, stains or other contamination. 9.2 Bezel must comply with job specifications.	2.5 0.65
10	PCB、COB	10.1 COB seal may not have pinholes larger than 0.2mm or contamination. 10.2 COB seal surface may not have pinholes through to the IC. 10.3 The height of the COB should not exceed the height indicated in the assembly diagram. 10.4 There may not be more than 2mm of sealant outside the seal area on the PCB. And there should be no more than three places. 10.5 No oxidation or contamination PCB terminals. 10.6 Parts on PCB must be the same as on the production characteristic chart. There should be no wrong parts, missing parts or excess parts. 10.7 The jumper on the PCB should conform to the product characteristic chart. 10.8 If solder gets on bezel tab pads, LED pad, zebra pad or screw hold pad, make sure it is smoothed down. 10.9 The Scraping testing standard for Copper Coating of PCB 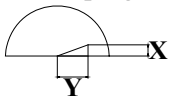 **X * Y<=2mm^2**	2.5 2.5 0.65 2.5 2.5 0.65 0.65 2.5 2.5
11	Soldering	11.1 No un-melted solder paste may be present on the PCB. 11.2 No cold solder joints, missing solder connections, oxidation or icicle. 11.3 No residue or solder balls on PCB. 11.4 No short circuits in components on PCB.	2.5 2.5 2.5 0.65

For technical questions, contact: displays@vishay.com
THIS DOCUMENT IS SUBJECT TO CHANGE WITHOUT NOTICE. THE PRODUCTS DESCRIBED HEREIN AND THIS DOCUMENT ARE SUBJECT TO SPECIFIC DISCLAIMERS, SET FORTH AT www.vishay.com/doc?91000

NO	Item	Criterion	AQL
12	General appearance	12.1 No oxidation, contamination, curves or, bends on interface Pin (OLB) of TCP. 12.2 No cracks on interface pin (OLB) of TCP. 12.3 No contamination, solder residue or solder balls on product. 12.4 The IC on the TCP may not be damaged, circuits. 12.5 The uppermost edge of the protective strip on the interface pin must be present or look as if it causes the interface pin to sever. 12.6 The residual rosin or tin oil of soldering (component or chip component) is not burned into brown or black color. 12.7 Sealant on top of the ITO circuit has not hardened. 12.8 Pin type must match type in specification sheet. 12.9 LCD pin loose or missing pins. 12.10 Product packaging must the same as specified on packaging specification sheet. 12.11 Product dimension and structure must conform to product specification sheet.	2.5 0.65 2.5 2.5 2.5 2.5 2.5 0.65 0.65 0.65 0.65

For technical questions, contact: displays@vishay.com
THIS DOCUMENT IS SUBJECT TO CHANGE WITHOUT NOTICE. THE PRODUCTS DESCRIBED HEREIN AND THIS DOCUMENT ARE SUBJECT TO SPECIFIC DISCLAIMERS, SET FORTH AT www.vishay.com/doc?91000

17.Material List of Components for RoHS

1. Declaration that all of or part of products (with the mark “N” in code), including, but not limited to, the LCM, accessories or packages, manufactured and/or delivered to your company (including your subsidiaries and affiliated company) directly or indirectly by our company (including our subsidiaries or affiliated companies) do not intentionally contain any of the substances listed in all applicable EU directives and regulations, including the following substances.

Exhibit A：The Harmful Material List

.

Material	(Cd)	(Pb)	(Hg)	(Cr6+)	PBBs	PBDEs
Limited Value	100 ppm	1000 ppm	1000 ppm	1000 ppm	1000 ppm	1000 ppm
Above limited value is set up according to RoHS.						

2.Process for RoHS requirement：

(1) Use the Sn/Ag/Cu soldering surface；the surface of Pb-free solder is rougher than we used before.

(2) Heat-resistance temp.：

Reflow：250C, 30 seconds Max.；

Connector soldering wave or hand soldering：320C, 10 seconds max.

(3) Temp. curve of reflow, max. Temp.：235C±5 degrees；

Recommended customer’s soldering temp. of connector：280C, 3 seconds.

For technical questions, contact: displays@vishay.com
THIS DOCUMENT IS SUBJECT TO CHANGE WITHOUT NOTICE. THE PRODUCTS DESCRIBED HEREIN AND THIS DOCUMENT ARE SUBJECT TO SPECIFIC DISCLAIMERS, SET FORTH AT www.vishay.com/doc?91000

Disclaimer

ALL PRODUCT, PRODUCT SPECIFICATIONS AND DATA ARE SUBJECT TO CHANGE WITHOUT NOTICE TO IMPROVE RELIABILITY, FUNCTION OR DESIGN OR OTHERWISE.

Vishay Intertechnology, Inc., its affiliates, agents, and employees, and all persons acting on its or their behalf (collectively, “Vishay”), disclaim any and all liability for any errors, inaccuracies or incompleteness contained in any datasheet or in any other disclosure relating to any product.

Vishay makes no warranty, representation or guarantee regarding the suitability of the products for any particular purpose or the continuing production of any product. To the maximum extent permitted by applicable law, Vishay disclaims (i) any and all liability arising out of the application or use of any product, (ii) any and all liability, including without limitation special, consequential or incidental damages, and (iii) any and all implied warranties, including warranties of fitness for particular purpose, non-infringement and merchantability.

Statements regarding the suitability of products for certain types of applications are based on Vishay's knowledge of typical requirements that are often placed on Vishay products in generic applications. Such statements are not binding statements about the suitability of products for a particular application. It is the customer's responsibility to validate that a particular product with the properties described in the product specification is suitable for use in a particular application. Parameters provided in datasheets and / or specifications may vary in different applications and performance may vary over time. All operating parameters, including typical parameters, must be validated for each customer application by the customer's technical experts. Product specifications do not expand or otherwise modify Vishay's terms and conditions of purchase, including but not limited to the warranty expressed therein.

Hyperlinks included in this datasheet may direct users to third-party websites. These links are provided as a convenience and for informational purposes only. Inclusion of these hyperlinks does not constitute an endorsement or an approval by Vishay of any of the products, services or opinions of the corporation, organization or individual associated with the third-party website. Vishay disclaims any and all liability and bears no responsibility for the accuracy, legality or content of the third-party website or for that of subsequent links.

Except as expressly indicated in writing, Vishay products are not designed for use in medical, life-saving, or life-sustaining applications or for any other application in which the failure of the Vishay product could result in personal injury or death. Customers using or selling Vishay products not expressly indicated for use in such applications do so at their own risk. Please contact authorized Vishay personnel to obtain written terms and conditions regarding products designed for such applications.

No license, express or implied, by estoppel or otherwise, to any intellectual property rights is granted by this document or by any conduct of Vishay. Product names and markings noted herein may be trademarks of their respective owners.

© 2024 VISHAY INTERTECHNOLOGY, INC. ALL RIGHTS RESERVED