Wirewound Rheostat / Potentiometer

FEATURES

- 55 W at 25 °C
- CCTU 05-03B (PA3)
- Material categorization: for definitions of compliance please see www.vishay.com/doc?99912

RoHS COMPLIANT

DIMENSIONS in millimeters

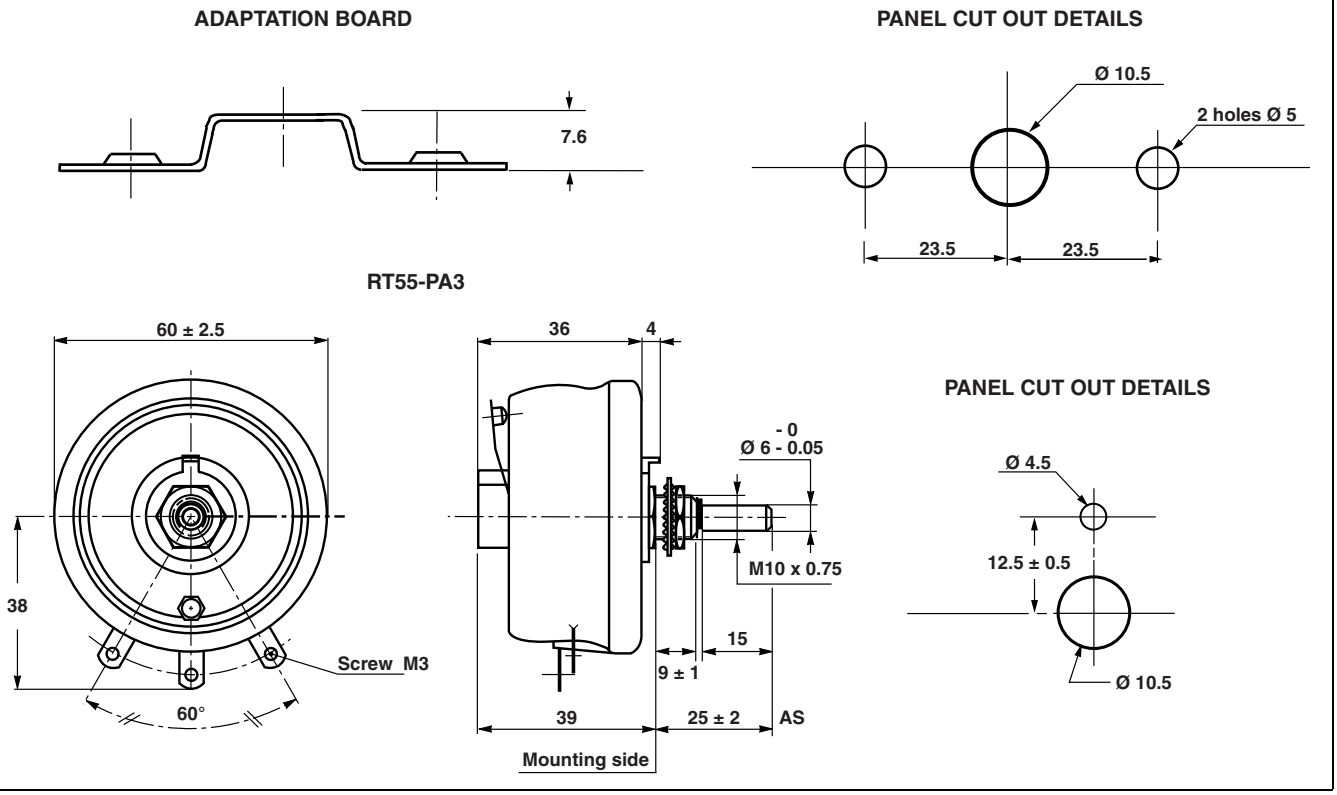

STANDARD ELECTRICAL SPECIFICATIONS

MODEL	RESISTANCE RANGE Ω	TOLERANCE ± %	RATED POWER $P_{25\,°C}$ W	VARIATION LAW STANDARD (1)	LIMITING ELEMENT VOLTAGE V	DIELECTRIC STRENGTH V_{RMS}	INSULATION RESISTANCE Ω
RT55	1 to 10K	10	55	Linear	500 (linear law)	1000	10^3M (500 V_{CC})

Note

(1) On request: sectorial winding

CLIMATIC SPECIFICATIONS

Temperature range	-55 °C; +320 °C
Climatic category	CCTU 454 CEI 55 / 200 / 56

MECHANICAL SPECIFICATIONS

Mechanical protection	Vitreous
Mechanical travel	300° ± 5°
Operating torque	2 Ncm to 15 Ncm
End stop torque	100 Ncm
Unit weight	175 g

For technical questions, contact: sferfixedresistors@vishay.com
THIS DOCUMENT IS SUBJECT TO CHANGE WITHOUT NOTICE. THE PRODUCTS DESCRIBED HEREIN AND THIS DOCUMENT ARE SUBJECT TO SPECIFIC DISCLAIMERS, SET FORTH AT www.vishay.com/doc?91000

LOCKING DEVICE

This is supplied as an option. The available spindle length is according to the panel thickness.
Order reference: DBA6

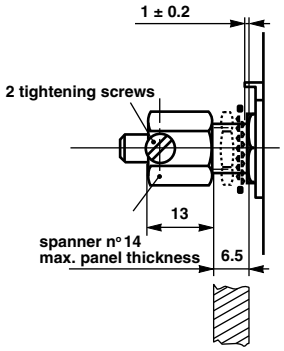

ADAPTATION BOARD

This enables 2 point mounting instead of bush mounting. The adaptation board is supplied as an option with 2 mounting screws.

SPINDLES			
Ø mm	DISTANCE TO MOUNTING PLATE mm	SCREW DRIVER SLOT	CODE
6	22	Without	AD
		With	ADF
	25	Without	AS
		With	ASF
	50	Without	AL

Note

- For any special requirement on request: spindle flats, etc. Please supply detailed drawing.

PARTICULAR CHARACTERISTICS		
NOMINAL RESISTANCE Ω	MAX. SERVICE VOLTAGE V	MAX. CURRENT THROUGH WIPER A
1	7.41	7.41
1.5	9.08	6.05
2.2	11	5
3.3	4.7	6.8
4.7	16.1	3.42
6.8	19.3	2.84
10	23.5	2.35
15	28.7	1.91
22	34.8	1.58
33	42.6	1.29
47	50.8	1.08
68	61.2	0.9
100	74.1	0.74
150	90.8	0.6
220	110	0.5
330	135	0.4
470	161	0.34
680	193	0.28
1K	235	0.23
1.5K	287	0.19
2.2K	348	0.16
3.3K	426	0.13
4.7K	500	0.11
5.6K	500	0.09
10K	500	0.05

COMMAND KNOB 41JF (OPTION)

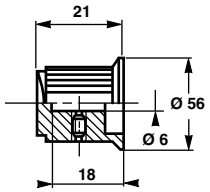

DIAL CG78 (OPTION)

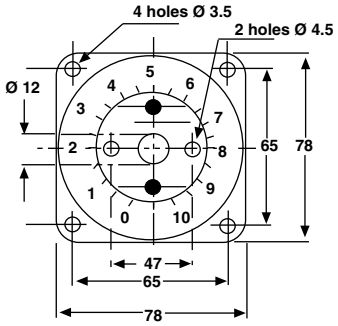

MARKING

Vishay Sfernice trademark, series, style, ohmic value (in Ω or kΩ), tolerance (in %), maximum current in A, manufacturing date.

For technical questions, contact: sferfixedresistors@vishay.com
THIS DOCUMENT IS SUBJECT TO CHANGE WITHOUT NOTICE. THE PRODUCTS DESCRIBED HEREIN AND THIS DOCUMENT ARE SUBJECT TO SPECIFIC DISCLAIMERS, SET FORTH AT www.vishay.com/doc?91000

ORDERING INFORMATION

RT	055	AS	4701	K	B	XXX
MODEL	STYLE	SPINDLE	OHMIC VALUE	TOLERANCE	PACKAGING	SPECIAL DESIGN

GLOBAL PART NUMBER INFORMATION

R	T	0	5	5	A	S	2	2	R	0	K	B

GLOBAL MODEL	SIZE	LOCKING DEVICE (OPT.)	WINDING (OPT.)	COMMAND SHAFT	OHMIC VALUE	TOLERANCE	PACKAGING	SPECIAL
RT	**055**	**D**	**BXXX** or **BXXXX** As applicable xxx(x) = internal number	**AS** = standard (Diam: 6 mm) **AL** **ASF** **AD** **ADF**	The three first digits are significant figures and the last digit specifies the number of zeros to follow. R designates decimal point. **2002** = 20 kΩ **4700** = 470 Ω **22R0** = 22 Ω **0R01** = 0.01 Ω	**J** = 5 % **K** = 10 %	**B** = bulk BO1	As applicable **Ex** = DXxx

RELATED DOCUMENTS

APPLICATION NOTES	
Potentiometers and Trimmers	www.vishay.com/doc?51001
Guidelines for Vishay Sfernice Resistive and Inductive Components	www.vishay.com/doc?52029

For technical questions, contact: sferfixedresistors@vishay.com

THIS DOCUMENT IS SUBJECT TO CHANGE WITHOUT NOTICE. THE PRODUCTS DESCRIBED HEREIN AND THIS DOCUMENT ARE SUBJECT TO SPECIFIC DISCLAIMERS, SET FORTH AT www.vishay.com/doc?91000

Disclaimer

ALL PRODUCT, PRODUCT SPECIFICATIONS AND DATA ARE SUBJECT TO CHANGE WITHOUT NOTICE TO IMPROVE RELIABILITY, FUNCTION OR DESIGN OR OTHERWISE.

Vishay Intertechnology, Inc., its affiliates, agents, and employees, and all persons acting on its or their behalf (collectively, “Vishay”), disclaim any and all liability for any errors, inaccuracies or incompleteness contained in any datasheet or in any other disclosure relating to any product.

Vishay makes no warranty, representation or guarantee regarding the suitability of the products for any particular purpose or the continuing production of any product. To the maximum extent permitted by applicable law, Vishay disclaims (i) any and all liability arising out of the application or use of any product, (ii) any and all liability, including without limitation special, consequential or incidental damages, and (iii) any and all implied warranties, including warranties of fitness for particular purpose, non-infringement and merchantability.

Statements regarding the suitability of products for certain types of applications are based on Vishay's knowledge of typical requirements that are often placed on Vishay products in generic applications. Such statements are not binding statements about the suitability of products for a particular application. It is the customer's responsibility to validate that a particular product with the properties described in the product specification is suitable for use in a particular application. Parameters provided in datasheets and / or specifications may vary in different applications and performance may vary over time. All operating parameters, including typical parameters, must be validated for each customer application by the customer's technical experts. Product specifications do not expand or otherwise modify Vishay's terms and conditions of purchase, including but not limited to the warranty expressed therein.

Hyperlinks included in this datasheet may direct users to third-party websites. These links are provided as a convenience and for informational purposes only. Inclusion of these hyperlinks does not constitute an endorsement or an approval by Vishay of any of the products, services or opinions of the corporation, organization or individual associated with the third-party website. Vishay disclaims any and all liability and bears no responsibility for the accuracy, legality or content of the third-party website or for that of subsequent links.

Except as expressly indicated in writing, Vishay products are not designed for use in medical, life-saving, or life-sustaining applications or for any other application in which the failure of the Vishay product could result in personal injury or death. Customers using or selling Vishay products not expressly indicated for use in such applications do so at their own risk. Please contact authorized Vishay personnel to obtain written terms and conditions regarding products designed for such applications.

No license, express or implied, by estoppel or otherwise, to any intellectual property rights is granted by this document or by any conduct of Vishay. Product names and markings noted herein may be trademarks of their respective owners.

© 2024 VISHAY INTERTECHNOLOGY, INC. ALL RIGHTS RESERVED