Long Life / Heavy Duty Potentiometer

FEATURES

- High power rating 2 W at 70 °C
- Sealed up to IP 67
- Low contact resistance variation (2 % typical)
- Robust nickel plated brass shaft
- Use of faston 2.86 connections
- Cermet element
- Center detent option
- Test according to IEC 60393-1
- Long life ≥ 200K cycle
- Material categorization: for definitions of compliance please see www.vishay.com/doc?99912

RoHS COMPLIANT

LINKS TO ADDITIONAL RESOURCES

3D Models

QUICK REFERENCE DATA	
Multiple module	No
Switch module	n/a
Detent module	Yes
Special electrical laws	A: linear
Sealing level	IP 67
Lifespan	200K cycle

DIMENSIONS in millimeters (inches) ± 0.5 mm (± 0.02")

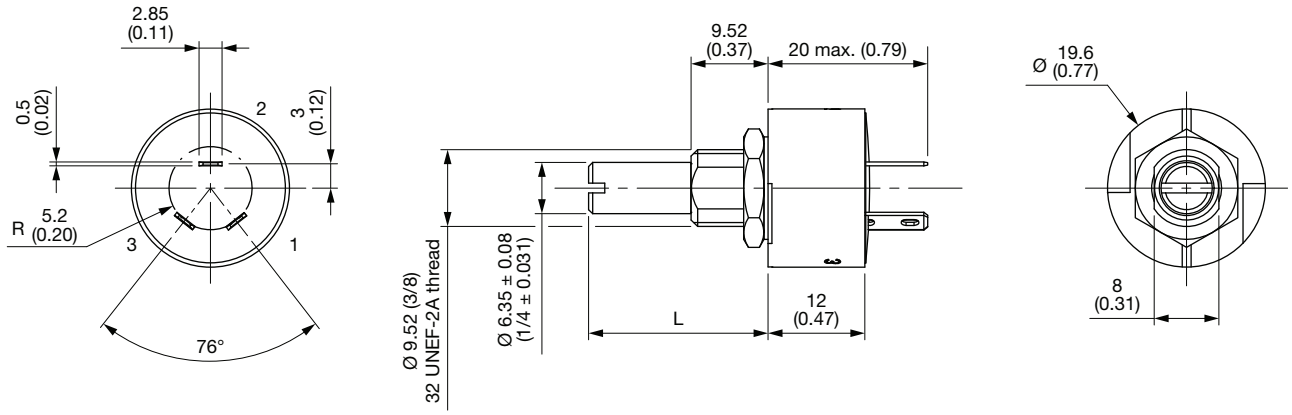

Length "L"	1/2"	7/8"	2"
Shaft code	GBS	GJS	GRS

For technical questions, contact: sferpottrimmers@vishay.com

THIS DOCUMENT IS SUBJECT TO CHANGE WITHOUT NOTICE. THE PRODUCTS DESCRIBED HEREIN AND THIS DOCUMENT ARE SUBJECT TO SPECIFIC DISCLAIMERS, SET FORTH AT www.vishay.com/doc?91000

ELECTRICAL SPECIFICATIONS		
Resistive element		Cermet
Electrical travel		270° ± 10°
Resistance range	Linear taper	500 Ω to 5 MΩ
Standard series		Please refer to table “Standard Resistance Element Data”
Tolerance	Standard	± 20 %
	On request	± 10 %
Taper standard law: A (linear) (other custom laws upon request)		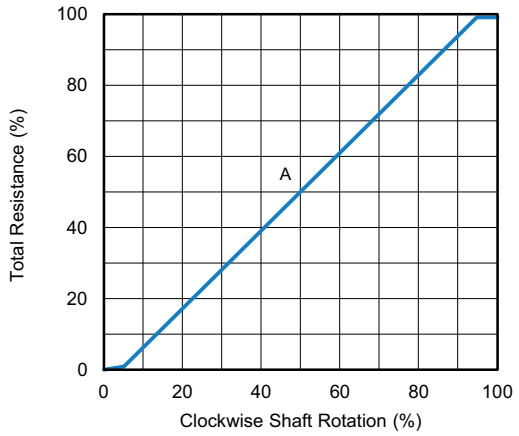
Circuit diagram		
Power rating	Linear	2 W at 70 °C 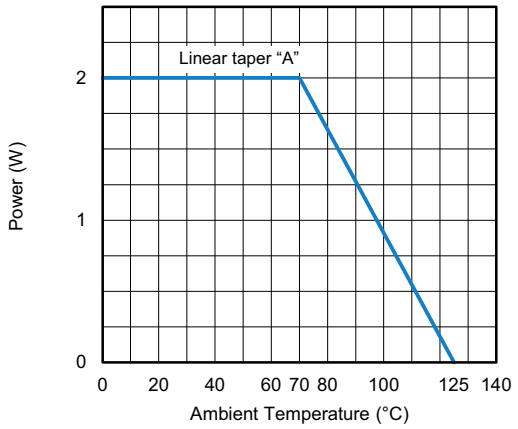
Temperature coefficient (typical)		300 ppm/°C
Limiting element voltage (linear law)		500 V
Contact resistance variation (typical)		2 % Rn
End resistance		1 Ω
Dielectric strength (RMS)		1500 V
Insulation resistance (500 V_{DC})		10^4 MΩ
Independent linearity (typical)		5 %

For technical questions, contact: sferpottrimmers@vishay.com

THIS DOCUMENT IS SUBJECT TO CHANGE WITHOUT NOTICE. THE PRODUCTS DESCRIBED HEREIN AND THIS DOCUMENT ARE SUBJECT TO SPECIFIC DISCLAIMERS, SET FORTH AT www.vishay.com/doc?91000

STANDARD RESISTANCE ELEMENT DATA

STANDARD RESISTANCE VALUES	LINEAR TAPER		
	MAX. POWER AT 70 °C	MAX. WORKING VOLTAGE	MAX. CUR. THROUGH ELEMENT WIPER
Ω	W	V	mA
500	2	31.6	53.2
1K	2	44.7	44.7
2K	2	53.2	31.6
5K	2	100	20.00
10K	2	141	14.14
20K	2	200	10.00
50K	2	315	6.32
100K	2	447	4.47
200K	1	500	2.50
500K	0.50	500	1.00
1M	0.25	500	0.50
2M	0.13	500	0.25
5M	0.05	500	0.10

MECHANICAL SPECIFICATIONS

Mechanical travel	300° ± 5°
Operating torque / typical value	2 Ncm (2.83 oz.-inch)
End stop torque	70 Ncm max. (6.5 lb-inch max.)
Tightening torque of mounting nut	200 Ncm max. (17.3 lb-inch max.)
Unit weight	23 g to 32 g max. (0.82 oz. to 1.14 oz.)

ENVIRONMENTAL SPECIFICATIONS

Temperature range	-55 °C to +125 °C
Climatic category	55/125/10
Sealing	Fully sealed - container IP 67

OPTIONS

Special feature command shaft	Length is measured from the mounting surface to the free end of the shaft. The screwdriver slot is aligned with the wiper within ± 10°. Special shafts are available, in accordance to drawings supplied by customers. We recommend that customers should not machine tool shafts, in order to avoid damage. Bending or torsion of terminals should also be avoided.
RV4L LPRP - with locating peg	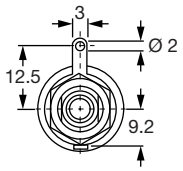

MARKING

- Vishay trademark
- Full ordering information (see Ordering Information table)
- Manufacturing date
- Marking of terminals 1, 2, 3

For technical questions, contact: sferpottrimmers@vishay.com
THIS DOCUMENT IS SUBJECT TO CHANGE WITHOUT NOTICE. THE PRODUCTS DESCRIBED HEREIN AND THIS DOCUMENT ARE SUBJECT TO SPECIFIC DISCLAIMERS, SET FORTH AT www.vishay.com/doc?91000

PERFORMANCE

TESTS	CONDITIONS	TYPICAL VALUES AND DRIFTS	
		$\Delta R_T/R_T$ (%)	OTHER
Electrical endurance	1000 h at rated power 90'/30' - ambient temp. 70 °C	± 3 %	-
Climatic sequence	Phase A dry heat 125 °C Phase B damp heat Phase C cold -55 °C Phase D damp heat 5 cycles	± 0.5 %	-
Damp heat, steady state	56 days 40 °C, 93 % HR	± 0.5 %	Insulation resistance: > 10^5 MΩ
Change of temperature	5 cycles -55 °C at +125 °C	± 0.5 %	
Mechanical endurance	200 000 cycles at rated power turn angle ± 60° T° = 20 °C	± 20 %	Independent linearity ± 10 %
Shock	50 *g*'s at 11 ms 3 successive shocks in 3 directions	± 1 %	
Vibration	10 Hz to 55 Hz 0.75 mm or 10 *g*'s at 6 h	± 1 %	

Note

- Nothing stated herein shall be construed as a guarantee of quality or durability

ORDERING INFORMATION (part number)

R	V	4	L	F	L	G	J	S	5	0	2	M	A				

MODEL	BUSHING	OPTION	SHAFT	SHAFT END	OHMIC VALUE	TOLERANCE	TAPER	SPECIAL
RV4L	F = Ø 3/8"	L = LPRP 0 = no locating peg	GB GJ GR AP = custom shaft (1)	S = slotted On request: R = round F = flatted D = knurled or C = custom	Linear from 500 Ω to 5 MΩ 502 = 5 kΩ	M = 20 % On request: K = 10 %	A = linear On request: custom laws	CV1M = detent option or special code given by Vishay

Note

(1) See Dimensions table

PART NUMBER DESCRIPTION (for information only)

RV4L	F	L	GJ	S	5K	20 %	A		BO50			e3
MODEL	BUSHING	OPTION	SHAFT	SHAFT END	VALUE	TOLERANCE	TAPER	DETENT OPTION	PACKAGING	AP N°	SPECIAL	LEAD (Pb)-FREE

RELATED DOCUMENTS

APPLICATION NOTES	
Potentiometers and Trimmers	www.vishay.com/doc?51001
Guidelines for Vishay Sfernice Resistive and Inductive Components	www.vishay.com/doc?52029

For technical questions, contact: sferpottrimmers@vishay.com
THIS DOCUMENT IS SUBJECT TO CHANGE WITHOUT NOTICE. THE PRODUCTS DESCRIBED HEREIN AND THIS DOCUMENT ARE SUBJECT TO SPECIFIC DISCLAIMERS, SET FORTH AT www.vishay.com/doc?91000

Disclaimer

ALL PRODUCT, PRODUCT SPECIFICATIONS AND DATA ARE SUBJECT TO CHANGE WITHOUT NOTICE TO IMPROVE RELIABILITY, FUNCTION OR DESIGN OR OTHERWISE.

Vishay Intertechnology, Inc., its affiliates, agents, and employees, and all persons acting on its or their behalf (collectively, “Vishay”), disclaim any and all liability for any errors, inaccuracies or incompleteness contained in any datasheet or in any other disclosure relating to any product.

Vishay makes no warranty, representation or guarantee regarding the suitability of the products for any particular purpose or the continuing production of any product. To the maximum extent permitted by applicable law, Vishay disclaims (i) any and all liability arising out of the application or use of any product, (ii) any and all liability, including without limitation special, consequential or incidental damages, and (iii) any and all implied warranties, including warranties of fitness for particular purpose, non-infringement and merchantability.

Statements regarding the suitability of products for certain types of applications are based on Vishay's knowledge of typical requirements that are often placed on Vishay products in generic applications. Such statements are not binding statements about the suitability of products for a particular application. It is the customer's responsibility to validate that a particular product with the properties described in the product specification is suitable for use in a particular application. Parameters provided in datasheets and / or specifications may vary in different applications and performance may vary over time. All operating parameters, including typical parameters, must be validated for each customer application by the customer's technical experts. Product specifications do not expand or otherwise modify Vishay's terms and conditions of purchase, including but not limited to the warranty expressed therein.

Hyperlinks included in this datasheet may direct users to third-party websites. These links are provided as a convenience and for informational purposes only. Inclusion of these hyperlinks does not constitute an endorsement or an approval by Vishay of any of the products, services or opinions of the corporation, organization or individual associated with the third-party website. Vishay disclaims any and all liability and bears no responsibility for the accuracy, legality or content of the third-party website or for that of subsequent links.

Except as expressly indicated in writing, Vishay products are not designed for use in medical, life-saving, or life-sustaining applications or for any other application in which the failure of the Vishay product could result in personal injury or death. Customers using or selling Vishay products not expressly indicated for use in such applications do so at their own risk. Please contact authorized Vishay personnel to obtain written terms and conditions regarding products designed for such applications.

No license, express or implied, by estoppel or otherwise, to any intellectual property rights is granted by this document or by any conduct of Vishay. Product names and markings noted herein may be trademarks of their respective owners.

© 2024 VISHAY INTERTECHNOLOGY, INC. ALL RIGHTS RESERVED