Precision Linear Transducers, Conductive Plastic, up to 450 mm

The 110 L is a compact, robust, easily mounted precision industrial motion transducer.

FEATURES

- Large measurement range
- High accuracy ± 1 % down to ± 0.05 %
- Essentially infinite resolution
- Easy mounting
- Material categorization: for definitions of compliance please see www.vishay.com/doc?99912

RoHS COMPLIANT

QUICK REFERENCE DATA	
Sensor type	LINEAR, conductive plastic
Output type	Connector
Market appliance	Industrial
Dimensions	L x 18 mm x 41 mm (with L = TET + 47 mm)

ELECTRICAL SPECIFICATIONS	
Theoretical electrical travel (TET) = E	25 mm to 450 mm in increments of 25 mm
Independent linearity (over TET) on request	≤ ± 1 % ≤ ± 0.1 % ≤ ± 0.05 % for E ≥ 100 mm
Actual electrical travel (AET)	See electrical connections table 1
Repeatability	≤ 0.01 %
Ohmic values (R_T)	From 400 Ω/cm to 2 kΩ/cm
Resistance tolerance at 20 °C	± 20 %
Maximum power rating	0.05 W/cm at 70 °C, 0 W at 125 °C
Wiper current	Recommended: a few µA - 1 mA max. (continuous)
Load resistance	Minimum 10^3 x R_T
Insulation resistance	≥ 1000 MΩ, 500 V_{DC}
Dielectric strength	≥ 750 V_{RMS}, 50 Hz

MECHANICAL SPECIFICATIONS	
Mechanical travel	TET + 6 mm min.
Housing	Anodized aluminum
Operating force	5 N typical
Shaft (free rotation)	Stainless steel
Termination on request	Connector: 723 series by cable
Wiper	Precious metal multifinger
Mounting	Movable brackets

PERFORMANCE	
Operating life	40 million cycles typical/1 Hz/T° = 20 °C ± 5 °C/80 % TET
Temperature range	-55 °C to +125 °C
Mechanical shocks on 3 axes	50 *g* - 11 ms - half sine
Sine vibration on 3 axes	1.5 mm peak to peak or 15 *g* - 10 Hz - 2000 Hz
Speed (max.)	8 m/s for f < 2 Hz; 3 m/s for f < 5 Hz

Note

- Nothing stated herein shall be construed as a guarantee of quality or durability.

DIMENSIONS in millimeters, general tolerance ± 1 mm

STANDARD MODEL

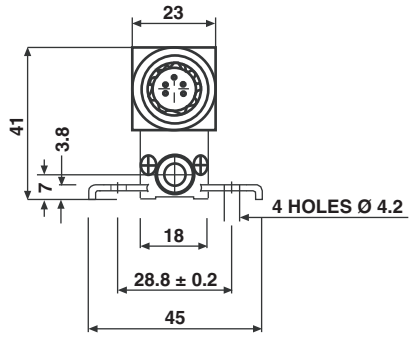

VIEW A

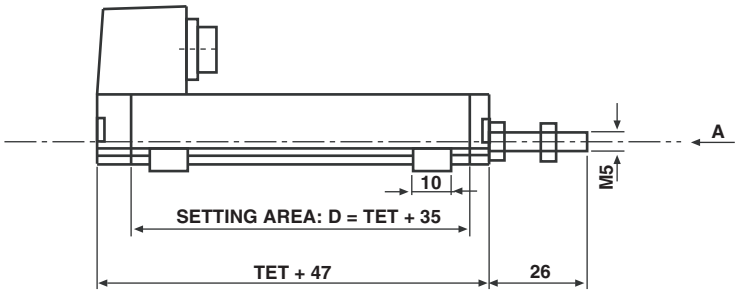

WITH CABLE OUTPUT: W04029

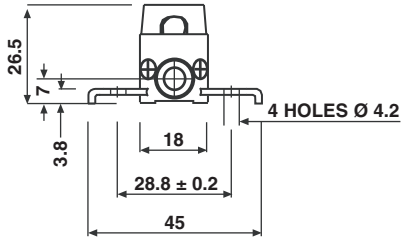

VIEW A

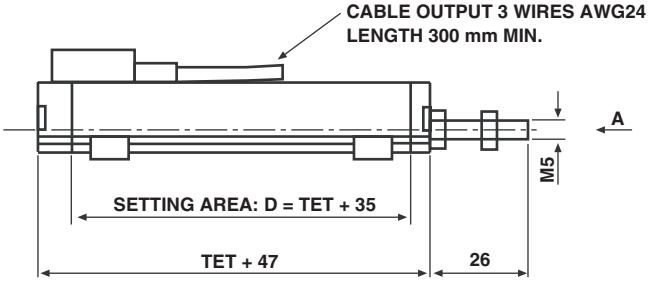

ELECTRICAL CONNECTIONS

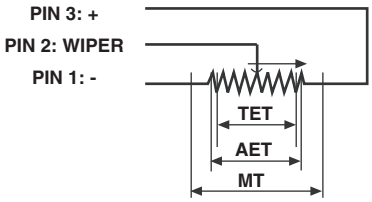

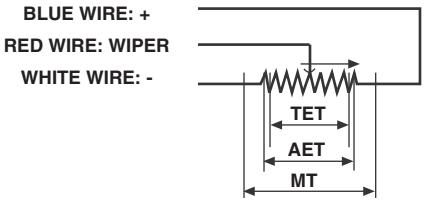

TET = THEORETICAL ELECTRICAL TRAVEL
AET = Actual ELECTRICAL TRAVEL
MT = MECHANICAL TRAVEL

TABLE 1

THEORETICAL ELECTRICAL TRAVEL TET	ACTUAL ELECTRICAL TRAVEL AET	TOLERANCE
From 25 mm to 275 mm	TET + 1 mm	± 0.5 mm
From 300 mm to 450 mm	TET + 1 mm	± 0.8 mm

OPTION: SPRING LOADED SHAFT DIMENSIONS in millimeters, general tolerance ± 1 mm

110L WITH SPRING LOADED SHAFT: W04030

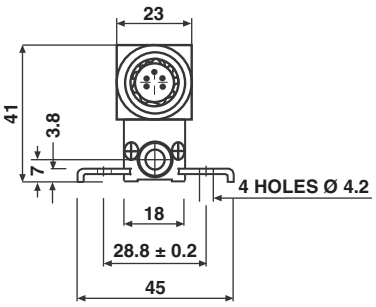

VIEW A

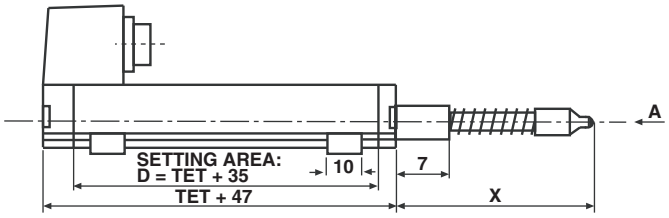

TABLE 2

MODEL	X
110 L1	75
110 L2	112
110 L3	150
110 L4	188

110L WITH CABLE OUTPUT AND SPRING LOADED SHAFT: W04031

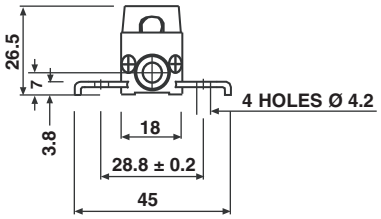

VIEW A

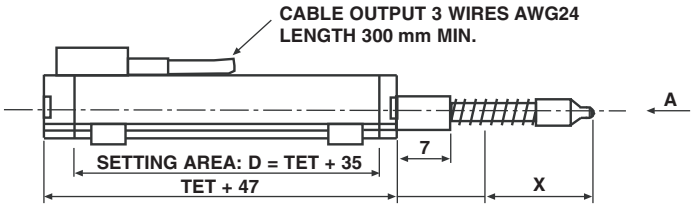

ACCESSORIES ON REQUEST DIMENSIONS in millimeters, general tolerance ± 1 mm

1) FEMALE CONNECTOR
Vishay's Reference: 328870

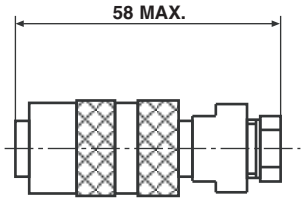

2) SPECIAL BALL JOINT
Vishay's reference: 323654

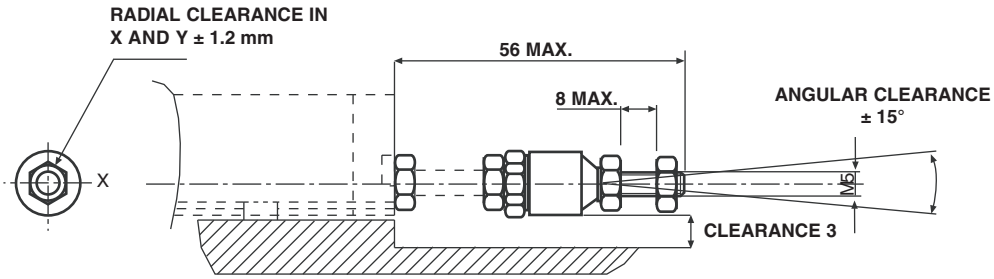

ORDERING INFORMATION/DESCRIPTION

REC	110	L	3	D	103	W...	e.
SERIES	MODEL	NUMBER OF TRACKS	THEORETICAL ELECTRICAL TRAVEL	LINEARITY	OHMIC VALUE	MODIFICATIONS	LEAD FINISH
		L = 1 track	Times 25 mm	A: ± 1 % D: ± 0.1 % E: ± 0.05 %	First 2 digits are significant numbers 3rd digit indicates number of zeros	Special feature code number	

SAP PART NUMBERING GUIDELINES

RE	110 L	3	D	103	W...
SERIES	MODEL	TET	LINEARITY	OHMIC VALUE	SPECIAL FEATURES

Disclaimer

ALL PRODUCT, PRODUCT SPECIFICATIONS AND DATA ARE SUBJECT TO CHANGE WITHOUT NOTICE TO IMPROVE RELIABILITY, FUNCTION OR DESIGN OR OTHERWISE.

Vishay Intertechnology, Inc., its affiliates, agents, and employees, and all persons acting on its or their behalf (collectively, “Vishay”), disclaim any and all liability for any errors, inaccuracies or incompleteness contained in any datasheet or in any other disclosure relating to any product.

Vishay makes no warranty, representation or guarantee regarding the suitability of the products for any particular purpose or the continuing production of any product. To the maximum extent permitted by applicable law, Vishay disclaims (i) any and all liability arising out of the application or use of any product, (ii) any and all liability, including without limitation special, consequential or incidental damages, and (iii) any and all implied warranties, including warranties of fitness for particular purpose, non-infringement and merchantability.

Statements regarding the suitability of products for certain types of applications are based on Vishay's knowledge of typical requirements that are often placed on Vishay products in generic applications. Such statements are not binding statements about the suitability of products for a particular application. It is the customer's responsibility to validate that a particular product with the properties described in the product specification is suitable for use in a particular application. Parameters provided in datasheets and / or specifications may vary in different applications and performance may vary over time. All operating parameters, including typical parameters, must be validated for each customer application by the customer's technical experts. Product specifications do not expand or otherwise modify Vishay's terms and conditions of purchase, including but not limited to the warranty expressed therein.

Hyperlinks included in this datasheet may direct users to third-party websites. These links are provided as a convenience and for informational purposes only. Inclusion of these hyperlinks does not constitute an endorsement or an approval by Vishay of any of the products, services or opinions of the corporation, organization or individual associated with the third-party website. Vishay disclaims any and all liability and bears no responsibility for the accuracy, legality or content of the third-party website or for that of subsequent links.

Except as expressly indicated in writing, Vishay products are not designed for use in medical, life-saving, or life-sustaining applications or for any other application in which the failure of the Vishay product could result in personal injury or death. Customers using or selling Vishay products not expressly indicated for use in such applications do so at their own risk. Please contact authorized Vishay personnel to obtain written terms and conditions regarding products designed for such applications.

No license, express or implied, by estoppel or otherwise, to any intellectual property rights is granted by this document or by any conduct of Vishay. Product names and markings noted herein may be trademarks of their respective owners.