High Speed Optocoupler, 1 MBd, Transistor Output

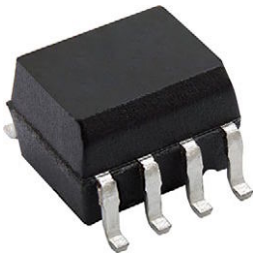

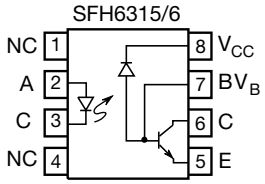

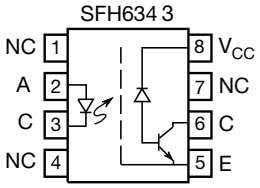

LINKS TO ADDITIONAL RESOURCES

Related Documents

DESCRIPTION

The SFH6315, SFH6316, SFH6343, high speed optocouplers, each consists of a GaAlAs infrared emitting diode, optically coupled with an integrated photo detector and a high speed transistor. The photo detector is junction isolated from the transistor to reduce miller capacitance effects. The open collector output function allows circuit designers to adjust the load conditions when interfacing with different logic systems such as TTL, CMOS, etc.

Because the SFH6343 has a faraday shield on the detector chip, it can also reject and minimize high input to output common mode transient voltages. The SFH6343 provides an isolated base connection to further reduce the potential electrical noise entering the package.

FEATURES

- Surface mountable
- Compatible with infrared vapor phase reflow and wave soldering processes
- Isolation test voltage, 4000 V_{RMS}
- Very high common mode transient immunity: 15000 V/µs at V_{CM} = 1500 V guaranteed (SFH6343)
- High speed: 1 MBd
- Guaranteed AC and DC performance temperature: 0 °C to 70 °C
- Open collector output
- Material categorization: for definitions of compliance please see www.vishay.com/doc?99912

Pb-free

e3

RoHS COMPLIANT

APPLICATIONS

- Microprocessor system interface
- Ground loop elimination
- Galvanic noise isolation
- Serial bus systems
- Signal level translation

AGENCY APPROVALS

- UL
- cUL
- DIN EN 60747-5-5 (VDE 0884), available with option 1

ORDERING INFORMATION

S	F	H	6	3	#	#	T

PART NUMBER

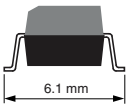

AGENCY CERTIFIED / PACKAGE	CTR (%)		
UL, cUL	≥ 5	≥ 15	NO BASE CONNECTION
SOIC-8	SFH6315T	SFH6316T	SFH6343T

For technical questions, contact: optocoupleranswers@vishay.com

THIS DOCUMENT IS SUBJECT TO CHANGE WITHOUT NOTICE. THE PRODUCTS DESCRIBED HEREIN AND THIS DOCUMENT ARE SUBJECT TO SPECIFIC DISCLAIMERS, SET FORTH AT www.vishay.com/doc?91000

ABSOLUTE MAXIMUM RATINGS (T_{amb} = 25 °C, unless otherwise specified)				
PARAMETER	**TEST CONDITION**	**SYMBOL**	**VALUE**	**UNIT**
INPUT				
Reverse voltage		V_R	3	V
DC forward current		I_F	25	mA
Surge forward current	$t_p \leq 1$ µs, 300 pulses/s	I_{FSM}	1	A
Power dissipation	$T_{amb} \leq 70$ °C	P_{diss}	45	mW
OUTPUT				
Supply voltage		V_S	-0.5 to 30	V
Output voltage		V_O	-0.5 to 25	V
Output current		I_O	8	mA
Power dissipation	$T_{amb} \leq 70$ °C	P_{diss}	100	mW
COUPLER				
Storage temperature range		T_{stg}	-55 to +150	°C
Ambient temperature range		T_{amb}	-55 to +100	°C
Junction temperature		T_j	125	°C
Soldering temperature	Max. 10 s, dip soldering distance to seating plane ≥ 1.5 mm		260	°C

Note

- Stresses in excess of the absolute maximum ratings can cause permanent damage to the device. Functional operation of the device is not implied at these or any other conditions in excess of those given in the operational sections of this document. Exposure to absolute maximum ratings for extended periods of the time can adversely affect reliability.

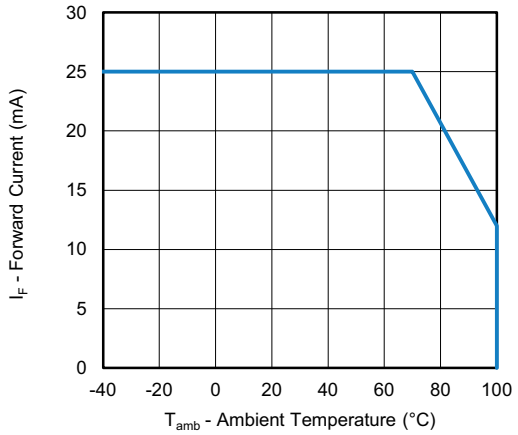

Fig. 1 - Forward Current vs. Ambient Temperature

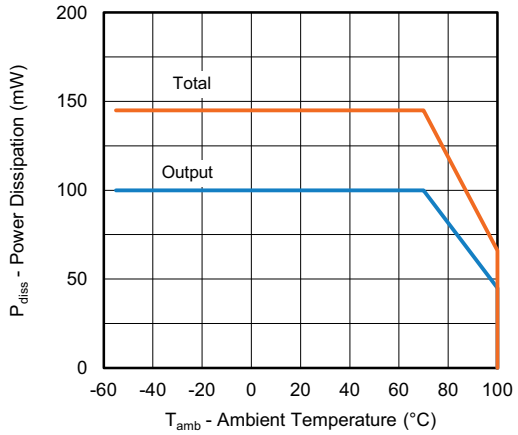

Fig. 2 - Power Dissipation vs. Ambient Temperature

For technical questions, contact: optocoupleranswers@vishay.com
THIS DOCUMENT IS SUBJECT TO CHANGE WITHOUT NOTICE. THE PRODUCTS DESCRIBED HEREIN AND THIS DOCUMENT ARE SUBJECT TO SPECIFIC DISCLAIMERS, SET FORTH AT www.vishay.com/doc?91000

ELECTRICAL CHARACTERISTICS (T_{amb} = 0 °C to 70 °C; typical values are at T_{amb} = 25 °C)							
PARAMETER	**TEST CONDITION**	**PART**	**SYMBOL**	**MIN.**	**TYP.**	**MAX.**	**UNIT**
INPUT							
Forward voltage	I_F = 16 mA [1]		V_F	-	1.3	1.8	V
	I_F = 16 mA		V_F	-	1.3	1.9	V
Reverse current	V_R = 3 V		I_R	-	0.001	10	µA
Capacitance	f = 1 MHz, V_F = 0 V		C_{IN}	-	24	-	pF
Temperature coefficient of forward voltage	I_F = 16 mA		$\Delta V_F/\Delta T_{amb}$	-	-1.7	-	mW/°C
OUTPUT							
Logic low supply current	I_F = 16 mA, V_O = open, V_{CC} = 15 V		I_{CCL}	-	215	-	µA
Logic high supply current	I_F = 0 mA, V_O = open, V_{CC} = 15 V [1]		I_{CCH}	-	0.1	1	µA
	I_F = 0 mA, V_O = open, V_{CC} = 15 V		I_{CCH}	-	0.1	2	µA
Logic low output voltage	I_F = 16 mA, V_{CC} = 4.5 V, I_O = 1.1 mA [1]	SFH6315	V_{OL}	-	0.15	0.4	V
	I_F = 16 mA, V_{CC} = 4.5 V, I_O = 0.8 mA		V_{OL}	-	0.13	0.5	V
	I_F = 16 mA, V_{CC} = 4.5 V, I_O = 3 mA [1]	SFH6316	V_{OL}	-	0.25	0.4	V
	I_F = 16 mA, V_{CC} = 4.5 V, I_O = 2.4 mA		V_{OL}	-	0.22	0.5	V
	I_F = 16 mA, V_{CC} = 4.5 V, I_O = 3.0 mA [1]	SFH6343	V_{OL}	-	0.25	0.4	V
	I_F = 16 mA, V_{CC} = 4.5 V, I_O = 2.4 mA		V_{OL}	-	0.22	0.5	V
Logic high output current	I_F = 0 mA, V_O = V_{CC} = 5.5 V [1]		I_{OH}	-	0.003	0.5	µA
	I_F = 0 mA, V_O = V_{CC} = 15 V [1]		I_{OH}	-	0.01	1	µA
	I_F = 0 mA, V_O = V_{CC} = 15 V		I_{OH}	-	-	50	µA
COUPLER							
Capacitance (input to output) [2]	f = 1 MHz		C_{IO}	-	0.4	-	pF

Notes

- Minimum and maximum values are testing requirements. Typical values are characteristics of the device and are the result of engineering evaluation. Typical values are for information only and are not part of the testing requirements.

(1) T_{amb} = 25 °C

(2) A 0.1 µF bypass capacitor connected between pins 5 and 8 is recommended

CURRENT TRANSFER RATIO (T_{amb} = 0 °C to 70 °C; typical values are at T_{amb} = 25 °C)							
PARAMETER	**TEST CONDITION**	**PART**	**SYMBOL**	**MIN.**	**TYP.**	**MAX.**	**UNIT**
Current transfer ratio	I_F = 16 mA, V_O = 0.4 V, V_{CC} = 4.5 V [1]	SFH6315	CTR	7	28	50	%
	I_F = 16 mA, V_O = 0.5 V, V_{CC} = 4.5 V		CTR	5	29	-	%
	I_F = 16 mA, V_O = 0.4 V, V_{CC} = 4.5 V [1]	SFH6316	CTR	19	28	50	%
	I_F = 16 mA, V_O = 0.5 V, V_{CC} = 4.5 V		CTR	15	29	-	%
	I_F = 16 mA, V_O = 0.4 V, V_{CC} = 4.5 V [1]	SFH6343	CTR	19	28	50	%
	I_F = 16 mA, V_O = 0.5 V, V_{CC} = 4.5 V		CTR	15	29	-	%

Notes

- Current transfer ratio in percent equals the ratio of output collector current (I_O) to the forward LED input current (I_F) times 100. A 0.1 µF bypass capacitor connected between pins 5 and 8 is recommended.

(1) T_{amb} = 25 °C

For technical questions, contact: optocoupleranswers@vishay.com
THIS DOCUMENT IS SUBJECT TO CHANGE WITHOUT NOTICE. THE PRODUCTS DESCRIBED HEREIN AND THIS DOCUMENT ARE SUBJECT TO SPECIFIC DISCLAIMERS, SET FORTH AT www.vishay.com/doc?91000

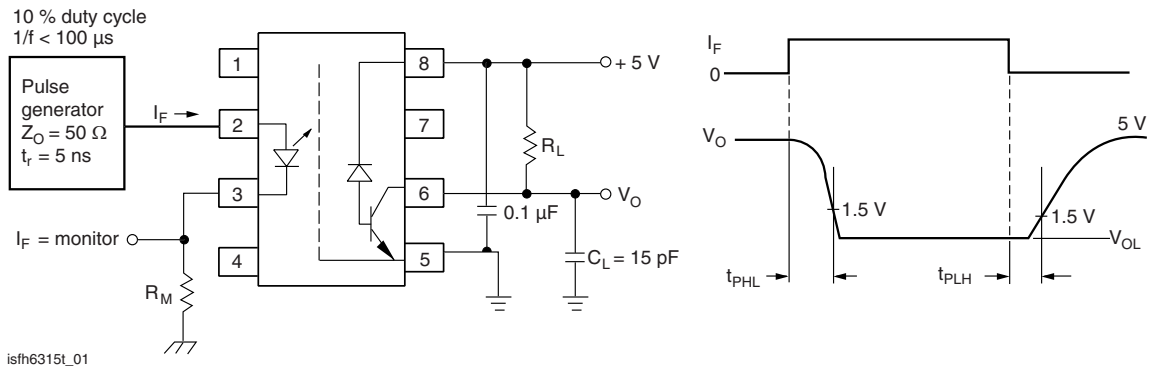

Fig. 3 - Test Circuit for Switching Times

SWITCHING CHARACTERISTICS (T_{amb} = 0 °C to 70 °C, V_{CC} = 5 V, I_F = 16 mA; typical values are at T_{amb} = 25 °C)							
PARAMETER	**TEST CONDITION**	**PART**	**SYMBOL**	**MIN.**	**TYP.**	**MAX.**	**UNIT**
Propagation delay time to logic low at output (see Fig. 1)	R_L = 4.1 kΩ	SFH6315	t_{PHL} (1)	-	0.5	1.5	µs
			t_{PHL}	-	0.5	2	µs
	R_L = 1.9 kΩ	SFH6316, SFH6343	t_{PHL} (1)	-	0.6	0.8	µs
			t_{PHL}	-	0.6	1	µs
Propagation delay time to logic high at output (see Fig. 1)	R_L = 4.1 kΩ	SFH6315	t_{PLH} (1)	-	0.7	1.5	µs
			t_{PLH}	-	0.7	2	µs
	R_L = 1.9 kΩ	SFH6316, SFH6343	t_{PLH} (1)	-	0.3	0.8	µs
			t_{PLH}	-	0.3	1	µs

Notes

- The 1.9 kΩ load represents 1 TTL unit load of 1.6 mA and the 5.6 kΩ pull-up resistor.
  The 4.1 kΩ load represents 1 LSTTL unit load of 0.36 mA and the 6.1 kΩ pull-up resistor.

(1) T_{amb} = 25 °C

COMMON MODE TRANSIENT IMMUNITY (T_{amb} = 25 °C)							
PARAMETER	**TEST CONDITION**	**PART**	**SYMBOL**	**MIN.**	**TYP.**	**MAX.**	**UNIT**
Common mode transient immunity at logic high level output (see Fig. 2)	R_L = 4.1 kΩ, I_F = 0 mA, V_{CM} = 10 V_{PP}	SFH6315	$\|CM_H\|$	-	1000	-	V/µs
	R_L = 1.9 kΩ, I_F = 0 mA, V_{CM} = 10 V_{PP}	SFH6316	$\|CM_H\|$	-	1000	-	V/µs
	R_L = 1.9 kΩ, I_F = 0 mA, V_{CM} = 1500 V_{PP}	SFH6343	$\|CM_H\|$	15 000	30 000	-	V/µs
Common mode transient immunity at logic low level output (see Fig. 2)	R_L = 4.1 kΩ, I_F = 16 mA, V_{CM} = 10 V_{PP}	SFH6315	$\|CM_L\|$	-	1000	-	V/µs
	R_L = 1.9 kΩ, I_F = 16 mA, V_{CM} = 10 V_{PP}	SFH6316	$\|CM_L\|$	-	1000	-	V/µs
	R_L = 1.9 kΩ, I_F = 16 mA, V_{CM} = 1500 V_{PP}	SFH6343	$\|CM_L\|$	15 000	30 000	-	V/µs

Note

- Common mode transient immunity in a logic high level is the maximum tolerable (positive) dV_{CM}/dt on the leading edge of the common mode pulse (V_{CM}) to assure that the output will remain in a logic high state (i.e., V_O > 2 V). Common mode transient immunity in a logic low level the maximum tolerable (negative) dV_{CM}/dt on the trailing edge of the common mode pulse signal (V_{CM} to assure that the output will remain in logic low state, i.e., V_O < 0.8 V).
  The 1.9 kΩ load represents 1 TTL unit load of 1.6 mA and the 5.6 kΩ pull-up resistor.
  The 4.1 kΩ load represents 1 LSTTL unit load of 0.36 mA and the 6.1 kΩ pull-up resistor.

For technical questions, contact: optocoupleranswers@vishay.com
THIS DOCUMENT IS SUBJECT TO CHANGE WITHOUT NOTICE. THE PRODUCTS DESCRIBED HEREIN AND THIS DOCUMENT ARE SUBJECT TO SPECIFIC DISCLAIMERS, SET FORTH AT www.vishay.com/doc?91000

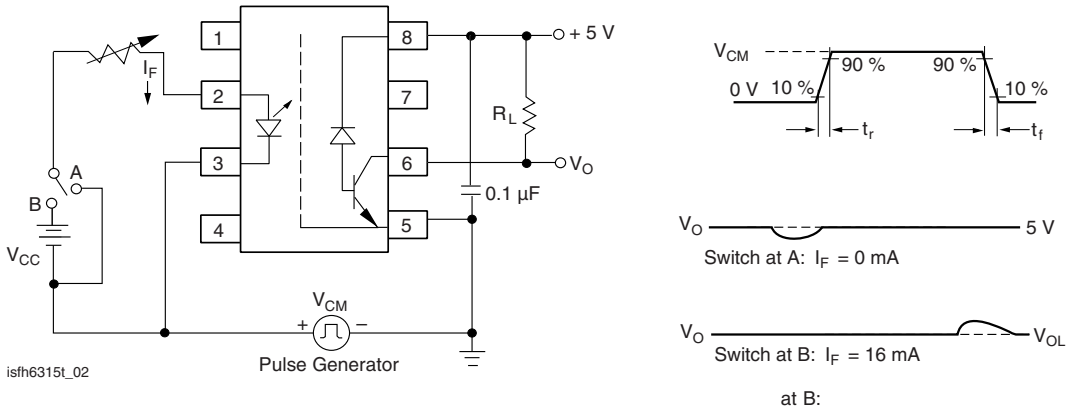

Fig. 4 - Test Circuit for Transient Immunity and Typical Waveforms

SAFETY AND INSULATION RATINGS (T_{amb} = 25 °C, unless otherwise specified)				
PARAMETER	**TEST CONDITION**	**SYMBOL**	**MIN.**	**UNIT**
Climatic classification	According to IEC 68 part 1		55 / 100 / 21	
Pollution degree	According to DIN VDE 0109		2	
Comparative tracking index	Insulation group IIIa	CTI	175	
Maximum rated withstanding isolation voltage	According to UL1577, t = 1 min	V_{ISO}	4000	V_{RMS}
Maximum transient isolation voltage	According to DIN EN 60747-5-5	V_{IOTM}	6000	V_{peak}
Maximum repetitive peak isolation voltage	According to DIN EN 60747-5-5	V_{IORM}	560	V_{peak}
Isolation resistance	T_{amb} = 25 °C, V_{IO} = 500 V	R_{IO}	$\geq 10^{12}$	Ω
	T_{amb} = 100 °C, V_{IO} = 500 V	R_{IO}	$\geq 10^{11}$	Ω
Output safety power		P_{SO}	350	mW
Input safety current		I_{SI}	150	mA
Input safety temperature		T_S	165	°C
Creepage distance	SOIC-8		≥ 4	mm
Clearance distance			≥ 4	mm
Insulation thickness		DTI	≥ 0.2	mm

Notes

- As per IEC 60747-5-5, §7.4.3.8.1, this optocoupler is suitable for “safe electrical insulation” only within the safety ratings. Compliance with the safety ratings shall be ensured by means of protective circuits.

(1) Device considered a two-terminal device: pins 1, 2, 3, and 4 shorted together and pins 5, 6, 7, and 8 shorted together.

For technical questions, contact: optocoupleranswers@vishay.com
THIS DOCUMENT IS SUBJECT TO CHANGE WITHOUT NOTICE. THE PRODUCTS DESCRIBED HEREIN AND THIS DOCUMENT ARE SUBJECT TO SPECIFIC DISCLAIMERS, SET FORTH AT www.vishay.com/doc?91000

TYPICAL CHARACTERISTICS (T_{amb} = 25 °C, unless otherwise specified)

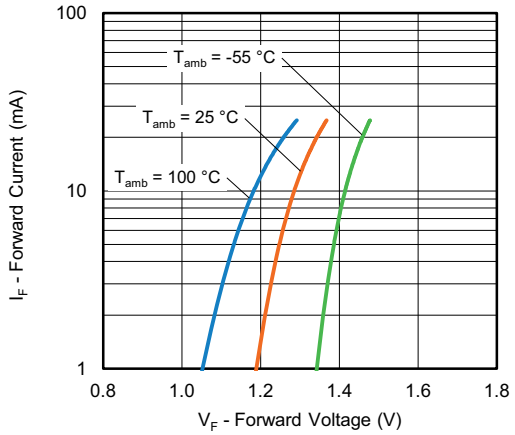

Fig. 5 - Forward Current vs. Forward Voltage

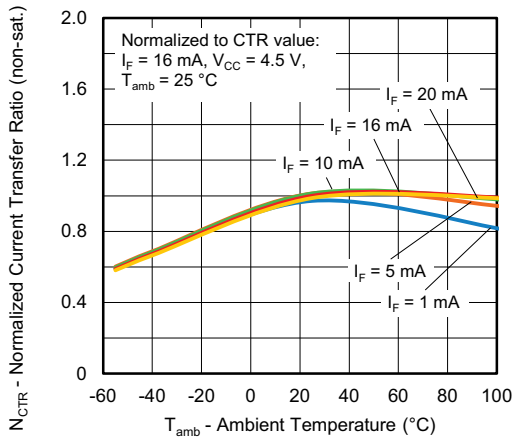

Fig. 6 - Normalized Current Transfer Ratio (non-saturated) vs. Ambient Temperature

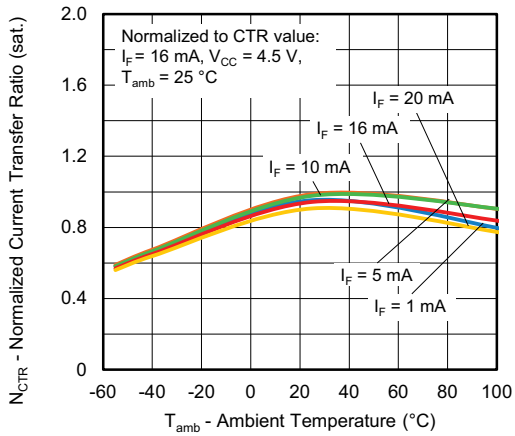

Fig. 7 - Normalized Current Transfer Ratio (saturated) vs. Ambient Temperature

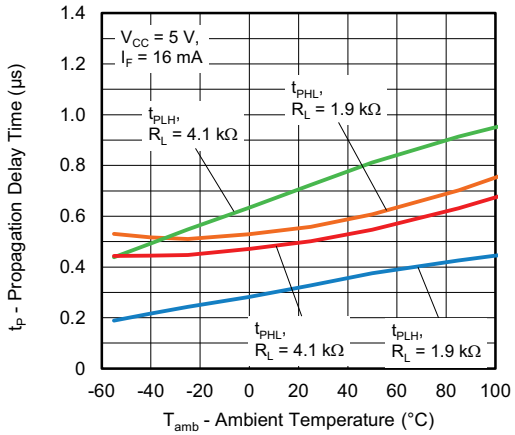

Fig. 8 - Propagation Delay Time vs. Ambient Temperature

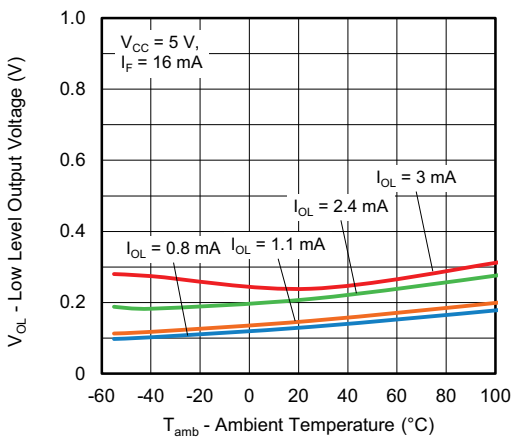

Fig. 9 - Low Level Output Voltage vs. Ambient Temperature

For technical questions, contact: optocoupleranswers@vishay.com
THIS DOCUMENT IS SUBJECT TO CHANGE WITHOUT NOTICE. THE PRODUCTS DESCRIBED HEREIN AND THIS DOCUMENT ARE SUBJECT TO SPECIFIC DISCLAIMERS, SET FORTH AT www.vishay.com/doc?91000

PACKAGE DIMENSIONS (in millimeters)

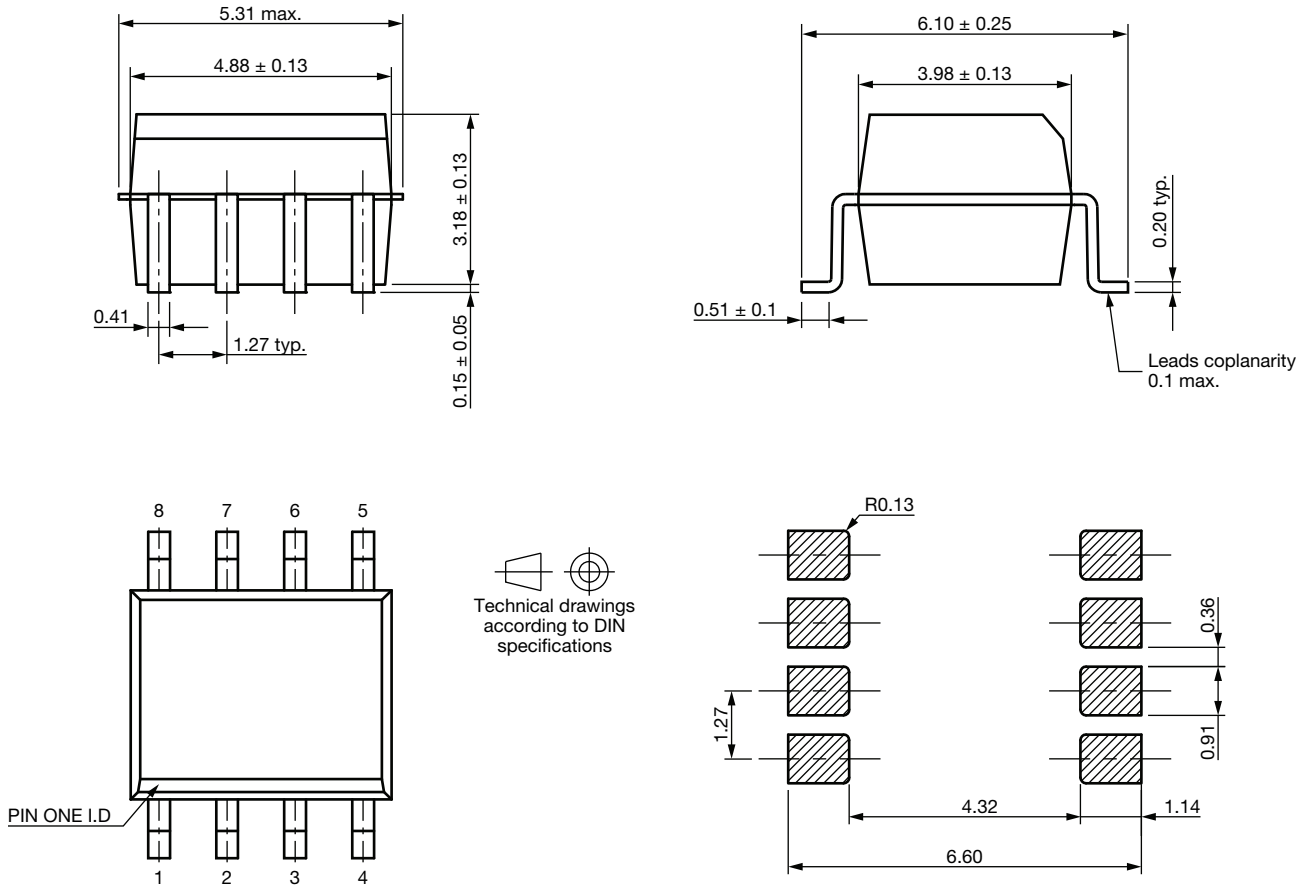

Fig. 10 - Package Drawing

PACKAGE MARKING

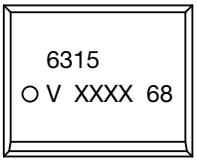

Fig. 11 - Example of SFH6315T

Notes

- XXXX = LMC (lot marking code)
- Tape and reel suffix (T) is not part of the package marking

For technical questions, contact: optocoupleranswers@vishay.com
THIS DOCUMENT IS SUBJECT TO CHANGE WITHOUT NOTICE. THE PRODUCTS DESCRIBED HEREIN AND THIS DOCUMENT ARE SUBJECT TO SPECIFIC DISCLAIMERS, SET FORTH AT www.vishay.com/doc?91000

PACKING INFORMATION (in millimeters)

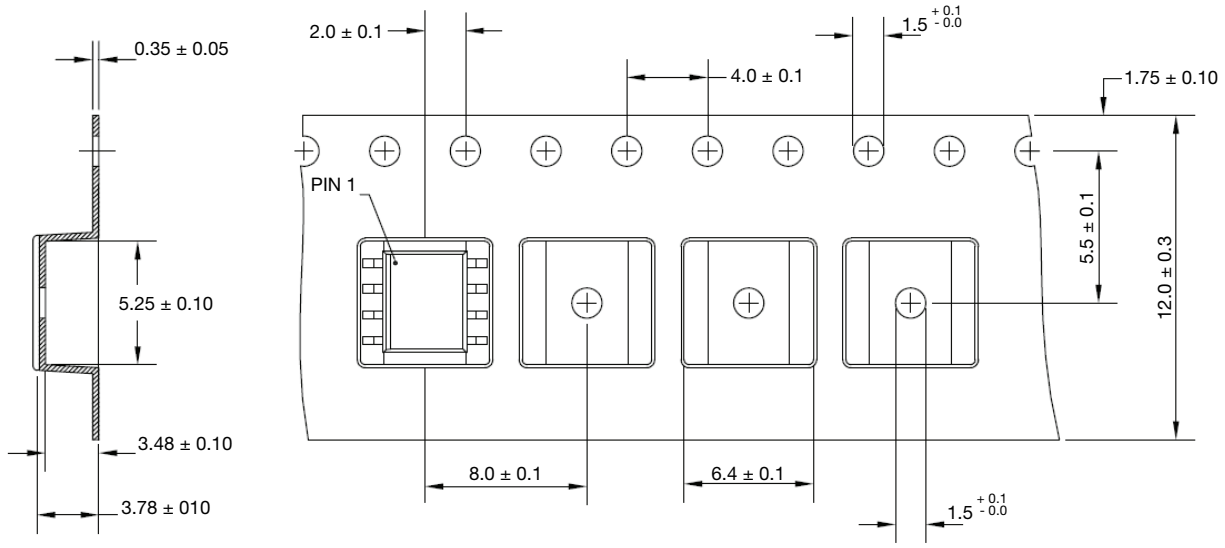

Fig. 12 - Tape and Reel Packing (2000 pieces on reel)

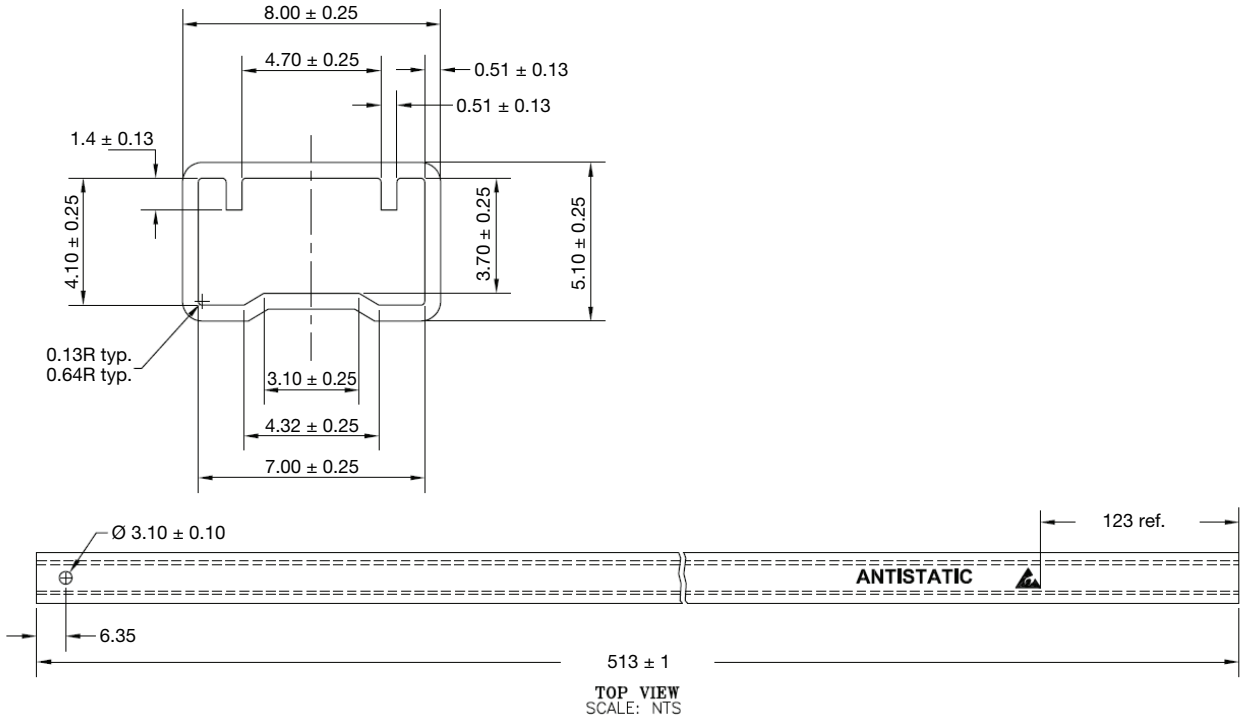

Fig. 13 - Tube Packing

DEVICE PER TUBE			
TYPE	UNITS/TUBE	TUBES/BOX	UNITS/BOX
SOIC-8	100	30	3000

For technical questions, contact: optocoupleranswers@vishay.com
THIS DOCUMENT IS SUBJECT TO CHANGE WITHOUT NOTICE. THE PRODUCTS DESCRIBED HEREIN AND THIS DOCUMENT ARE SUBJECT TO SPECIFIC DISCLAIMERS, SET FORTH AT www.vishay.com/doc?91000

SOLDER PROFILES

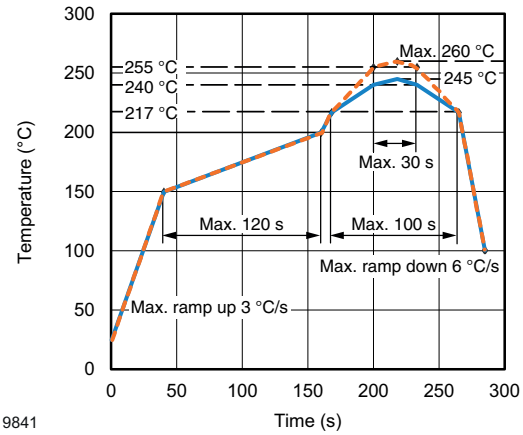

Fig. 14 - Lead (Pb)-free Reflow Solder Profile According to J-STD-020 for SMD Devices

HANDLING AND STORAGE CONDITIONS

ESD level: HBM class 1C

Floor life: unlimited

Conditions: T_{amb} < 30 °C, RH < 85 %

Moisture sensitivity level 1, according to J-STD-020

For technical questions, contact: optocoupleranswers@vishay.com
THIS DOCUMENT IS SUBJECT TO CHANGE WITHOUT NOTICE. THE PRODUCTS DESCRIBED HEREIN AND THIS DOCUMENT ARE SUBJECT TO SPECIFIC DISCLAIMERS, SET FORTH AT www.vishay.com/doc?91000

Disclaimer

ALL PRODUCT, PRODUCT SPECIFICATIONS AND DATA ARE SUBJECT TO CHANGE WITHOUT NOTICE TO IMPROVE RELIABILITY, FUNCTION OR DESIGN OR OTHERWISE.

Vishay Intertechnology, Inc., its affiliates, agents, and employees, and all persons acting on its or their behalf (collectively, “Vishay”), disclaim any and all liability for any errors, inaccuracies or incompleteness contained in any datasheet or in any other disclosure relating to any product.

Vishay makes no warranty, representation or guarantee regarding the suitability of the products for any particular purpose or the continuing production of any product. To the maximum extent permitted by applicable law, Vishay disclaims (i) any and all liability arising out of the application or use of any product, (ii) any and all liability, including without limitation special, consequential or incidental damages, and (iii) any and all implied warranties, including warranties of fitness for particular purpose, non-infringement and merchantability.

Statements regarding the suitability of products for certain types of applications are based on Vishay's knowledge of typical requirements that are often placed on Vishay products in generic applications. Such statements are not binding statements about the suitability of products for a particular application. It is the customer's responsibility to validate that a particular product with the properties described in the product specification is suitable for use in a particular application. Parameters provided in datasheets and / or specifications may vary in different applications and performance may vary over time. All operating parameters, including typical parameters, must be validated for each customer application by the customer's technical experts. Product specifications do not expand or otherwise modify Vishay's terms and conditions of purchase, including but not limited to the warranty expressed therein.

Hyperlinks included in this datasheet may direct users to third-party websites. These links are provided as a convenience and for informational purposes only. Inclusion of these hyperlinks does not constitute an endorsement or an approval by Vishay of any of the products, services or opinions of the corporation, organization or individual associated with the third-party website. Vishay disclaims any and all liability and bears no responsibility for the accuracy, legality or content of the third-party website or for that of subsequent links.

Except as expressly indicated in writing, Vishay products are not designed for use in medical, life-saving, or life-sustaining applications or for any other application in which the failure of the Vishay product could result in personal injury or death. Customers using or selling Vishay products not expressly indicated for use in such applications do so at their own risk. Please contact authorized Vishay personnel to obtain written terms and conditions regarding products designed for such applications.

No license, express or implied, by estoppel or otherwise, to any intellectual property rights is granted by this document or by any conduct of Vishay. Product names and markings noted herein may be trademarks of their respective owners.

© 2024 VISHAY INTERTECHNOLOGY, INC. ALL RIGHTS RESERVED