Power SMD LED PLCC-2

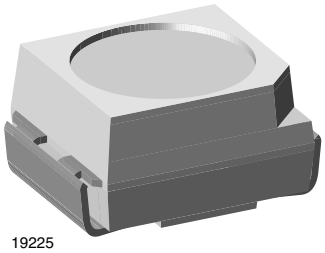

19225

DESCRIPTION

The VLM.334.. series is an advanced modification of the Vishay VLM.31.. series. It is designed to incorporate larger chips, therefore, capable of withstanding a 70 mA drive current.

The package of the VLM.334.. is the PLCC-2.

It consists of a lead frame which is embedded in a white thermoplast. The reflector inside this package is filled up with clear epoxy.

PRODUCT GROUP AND PACKAGE DATA

- Product group: LED
- Package: SMD PLCC-2
- Product series: power
- Angle of half intensity: ± 60°

FEATURES

- Utilizing latest advanced AlInGaP technology
- Available in 8 mm tape
- Luminous intensity and color categorized per packing unit
- Luminous intensity ratio per packing unit $I_{Vmax.}/I_{Vmin.} \leq 1.6$
- Thermal resistance R = 300 K/W
- ESD-withstand voltage: Up to 2 kV according to JESD22-A114-B
- Preconditioning according to JEDEC® level 2a
- Compatible with reflow, vapor phase and wave solder processes according to CECC 00802 and J-STD-020
- AEC-Q101 qualified
- Material categorization: for definitions of compliance please see www.vishay.com/doc?99912

AUTOMOTIVE GRADE

Pb-free

e3

RoHS COMPLIANT

HALOGEN FREE

GREEN (5-2008)

APPLICATIONS

- Traffic signals and signs
- Interior and exterior lighting
- Dashboard illumination
- Indicator and backlighting purposes for audio, video, LCDs switches, symbols, illuminated advertising etc.

PARTS TABLE

PART	COLOR	LUMINOUS INTENSITY (mcd)			at I_F (mA)	WAVELENGTH (nm)			at I_F (mA)	FORWARD VOLTAGE (V)			at I_F (mA)	TECHNOLOGY
		MIN.	TYP.	MAX.		MIN.	TYP.	MAX.		MIN.	TYP.	MAX.		
VLMS334AABB-GS08	Super red	1120	1600	2800	50	626	630	639	50	1.9	2.2	2.8	50	AlInGaP on Si
VLMR334BACB-GS08	Red	1800	2200	4500	50	619	625	631	50	1.9	2.2	2.8	50	AlInGaP on Si
VLMK334BACB-GS08	Amber	1800	2800	4500	50	611	616	622	50	1.9	2.25	2.8	50	AlInGaP on Si
VLMY334BACB-GS08	Yellow	1800	2300	4500	50	583	589	594	50	1.9	2.3	2.8	50	AlInGaP on Si

For technical questions, contact: LED@vishay.com
THIS DOCUMENT IS SUBJECT TO CHANGE WITHOUT NOTICE. THE PRODUCTS DESCRIBED HEREIN AND THIS DOCUMENT ARE SUBJECT TO SPECIFIC DISCLAIMERS, SET FORTH AT www.vishay.com/doc?91000

ABSOLUTE MAXIMUM RATINGS (T_{amb} = 25 °C, unless otherwise specified)
VLMS334..., VLMR334..., VLMK334..., VLMY334...

PARAMETER	TEST CONDITION	SYMBOL	VALUE	UNIT
Reverse voltage [1]	Short term application only	V_R	5	V
DC forward current	$T_{amb} \leq 65$ °C (300 K/W)	I_F	70	mA
Surge forward current	$t_p \leq 10$ µs	I_{FSM}	0.1	A
Power dissipation		P_V	200	mW
Junction temperature		T_j	125	°C
Operating temperature range		T_{amb}	-40 to +100	°C
Storage temperature range		T_{stg}	-40 to +100	°C
Thermal resistance junction to ambient	Mounted on PC board (pad size > 16 mm²)	R_{thJA}	300	K/W

Note

[1] Driving the LED in reverse direction is suitable for a short term application

OPTICAL AND ELECTRICAL CHARACTERISTICS (T_{amb} = 25 °C, unless otherwise specified)
VLMS334.., SUPER RED

PARAMETER	TEST CONDITION	PART	SYMBOL	MIN.	TYP.	MAX.	UNIT
Luminous intensity	I_F = 50 mA	VLMS334AABB	I_V	1120	1600	2800	mcd
Luminous flux/luminous intensity			ϕ_V/I_V	-	3	-	mlm/mcd
Dominant wavelength	I_F = 50 mA		λ_d	626	630	639	nm
Peak wavelength	I_F = 50 mA		λ_p	-	639	-	nm
Spectral bandwidth at 50 % $I_{rel\ max.}$	I_F = 50 mA		$\Delta\lambda$	-	18	-	nm
Angle of half intensity	I_F = 50 mA		φ	-	± 60	-	°
Forward voltage	I_F = 50 mA		V_F	1.9	2.2	2.8	V
Reverse current	V_R = 5 V		I_R	-	0.01	10	µA

OPTICAL AND ELECTRICAL CHARACTERISTICS (T_{amb} = 25 °C, unless otherwise specified)
VLMR334.., RED

PARAMETER	TEST CONDITION	PART	SYMBOL	MIN.	TYP.	MAX.	UNIT
Luminous intensity	I_F = 50 mA	VLMR334BACB	I_V	1800	2200	4500	mcd
Luminous flux/luminous intensity			ϕ_V/I_V	-	3	-	mlm/mcd
Dominant wavelength	I_F = 50 mA		λ_d	619	625	631	nm
Peak wavelength	I_F = 50 mA		λ_p	-	632	-	nm
Spectral bandwidth at 50 % $I_{rel\ max.}$	I_F = 50 mA		$\Delta\lambda$	-	18	-	nm
Angle of half intensity	I_F = 50 mA		φ	-	± 60	-	°
Forward voltage	I_F = 50 mA		V_F	1.9	2.2	2.8	V
Reverse current	V_R = 5 V		I_R	-	0.01	10	µA

OPTICAL AND ELECTRICAL CHARACTERISTICS (T_{amb} = 25 °C, unless otherwise specified)
VLMK334.., AMBER

PARAMETER	TEST CONDITION	PART	SYMBOL	MIN.	TYP.	MAX.	UNIT
Luminous intensity	I_F = 50 mA	VLMK334BACB	I_V	1800	2800	4500	mcd
Luminous flux/luminous intensity			ϕ_V/I_V	-	3	-	mlm/mcd
Dominant wavelength	I_F = 50 mA		λ_d	611	616	622	nm
Peak wavelength	I_F = 50 mA		λ_p	-	622	-	nm
Spectral bandwidth at 50 % $I_{rel\ max.}$	I_F = 50 mA		$\Delta\lambda$	-	18	-	nm
Angle of half intensity	I_F = 50 mA		φ	-	± 60	-	°
Forward voltage	I_F = 50 mA		V_F	1.9	2.25	2.8	V
Reverse current	V_R = 5 V		I_R	-	0.01	10	µA

THIS DOCUMENT IS SUBJECT TO CHANGE WITHOUT NOTICE. THE PRODUCTS DESCRIBED HEREIN AND THIS DOCUMENT ARE SUBJECT TO SPECIFIC DISCLAIMERS, SET FORTH AT www.vishay.com/doc?91000

OPTICAL AND ELECTRICAL CHARACTERISTICS (T_{amb} = 25 °C, unless otherwise specified)
VLMY334.., YELLOW

PARAMETER	TEST CONDITION	PART	SYMBOL	MIN.	TYP.	MAX.	UNIT
Luminous intensity	I_F = 50 mA	VLMY334BACB	I_V	1800	2300	4500	mcd
Luminous flux/luminous intensity			ϕ_V/I_V	-	3	-	mlm/mcd
Dominant wavelength	I_F = 50 mA		λ_d	583	589	594	nm
Peak wavelength	I_F = 50 mA		λ_p	-	591	-	nm
Spectral bandwidth at 50 % $I_{rel\ max.}$	I_F = 50 mA		$\Delta\lambda$	-	17	-	nm
Angle of half intensity	I_F = 50 mA		φ	-	± 60	-	°
Forward voltage	I_F = 50 mA		V_F	1.9	2.3	2.8	V
Reverse current	V_R = 5 V		I_R	-	0.01	10	µA

COLOR CLASSIFICATION

GROUP	DOM. WAVELENGTH (nm)			
	AMBER		YELLOW	
	MIN.	MAX.	MIN.	MAX.
1	611	618	-	-
2	614	622	583	586
3	-	-	585	588
4	-	-	587	590
5	-	-	589	592
6	-	-	591	594

Note

- Wavelengths are tested at a current pulse duration of 25 ms

LUMINOUS INTENSITY CLASSIFICATION

GROUP	LIGHT INTENSITY (mcd)	
STANDARD	MIN.	MAX.
AA	1120	1400
AB	1400	1800
BA	1800	2240
BB	2240	2800
CA	2800	3550
CB	3550	4500

Note

- Luminous intensity is tested at a current pulse duration of 25 ms and an accuracy of ± 11 %.
  The above type numbers represent the order groups which include only a few brightness groups. Only one group will be shipped on each reel (there will be no mixing of two groups on each reel).
  In order to ensure availability, single brightness groups will not be orderable.
  In a similar manner for colors where wavelength groups are measured and binned, single wavelength groups will be shipped on any one reel.
  In order to ensure availability, single wavelength groups will not be orderable

CROSSING TABLE

VISHAY	OSRAM
VLMS334AABB	LS T67F-T2V2-1-1
VLMR334BACB	LR T67F-U1AA-1-1
VLMK334BACB	LA T67F-U2AB-24-1
VLMY334BACB	LY T67F-U1AA-36-1

For technical questions, contact: LED@vishay.com
THIS DOCUMENT IS SUBJECT TO CHANGE WITHOUT NOTICE. THE PRODUCTS DESCRIBED HEREIN AND THIS DOCUMENT ARE SUBJECT TO SPECIFIC DISCLAIMERS, SET FORTH AT www.vishay.com/doc?91000

TYPICAL CHARACTERISTICS (T_{amb} = 25 °C, unless otherwise specified)

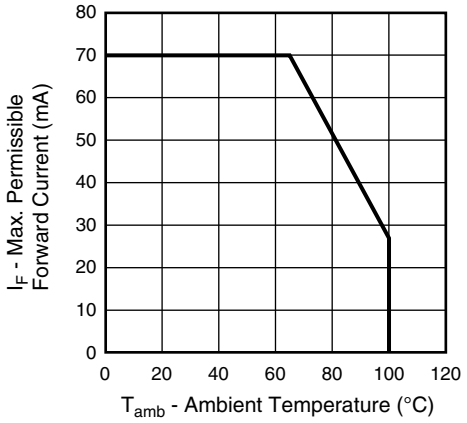

Fig. 1 - Maximum Permissible Forward Current vs. Ambient Temperature

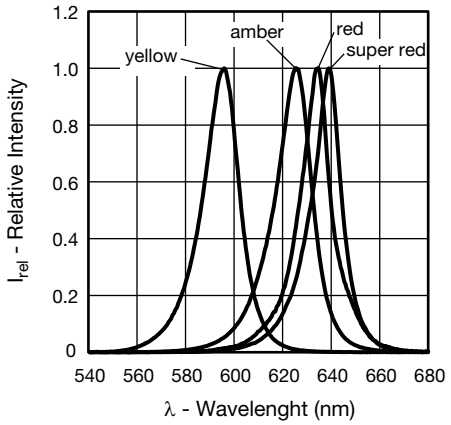

Fig. 4 - Relative Intensity vs. Wavelength

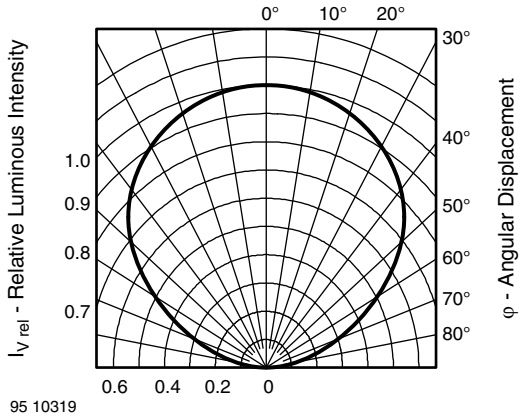

Fig. 2 - Relative Luminous Intensity vs. Angular Displacement

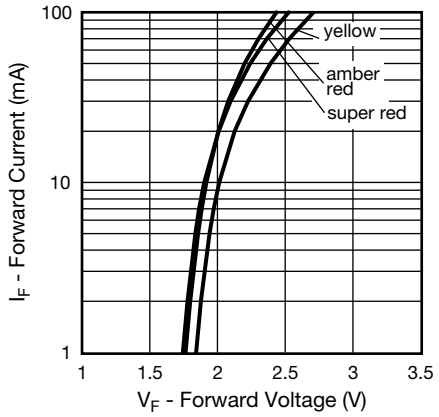

Fig. 5 - Forward Current vs. Forward Voltage

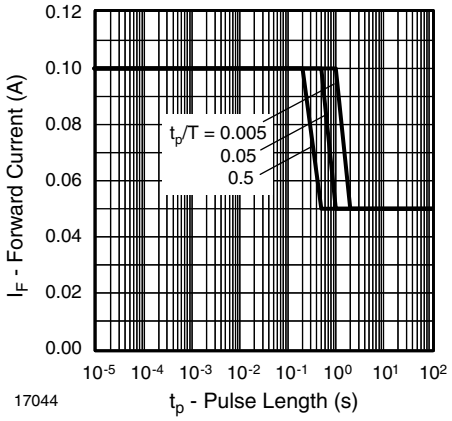

Fig. 3 - Forward Current vs. Pulse Length

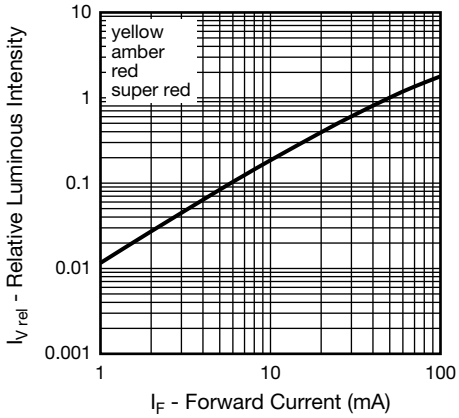

Fig. 6 - Relative Luminous Intensity vs. Forward Current

THIS DOCUMENT IS SUBJECT TO CHANGE WITHOUT NOTICE. THE PRODUCTS DESCRIBED HEREIN AND THIS DOCUMENT ARE SUBJECT TO SPECIFIC DISCLAIMERS, SET FORTH AT www.vishay.com/doc?91000

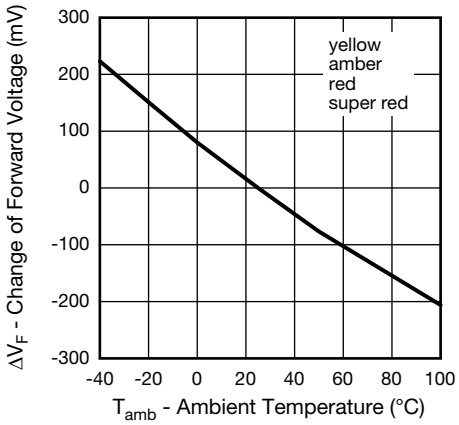

Fig. 7 - Change of Forward Voltage vs. Ambient Temperature

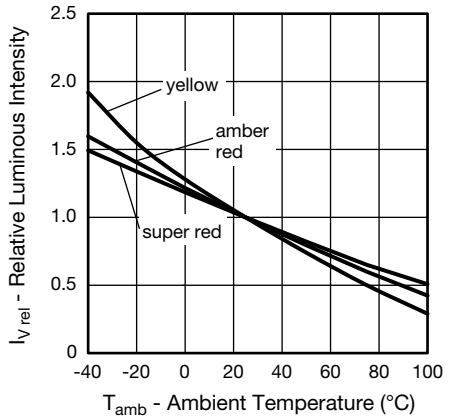

Fig. 8 - Relative Luminous Intensity vs. Ambient Temperature

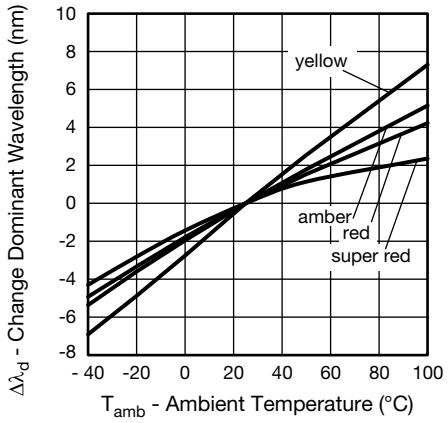

Fig. 9 - Change of Dominant Wavelength vs. Ambient Temperature

For technical questions, contact: LED@vishay.com
THIS DOCUMENT IS SUBJECT TO CHANGE WITHOUT NOTICE. THE PRODUCTS DESCRIBED HEREIN AND THIS DOCUMENT ARE SUBJECT TO SPECIFIC DISCLAIMERS, SET FORTH AT www.vishay.com/doc?91000

PACKAGE DIMENSIONS in millimeters

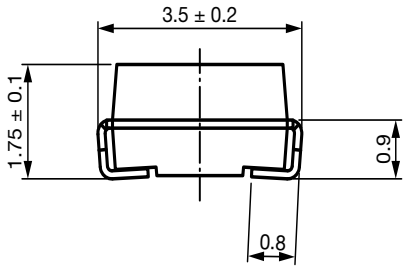

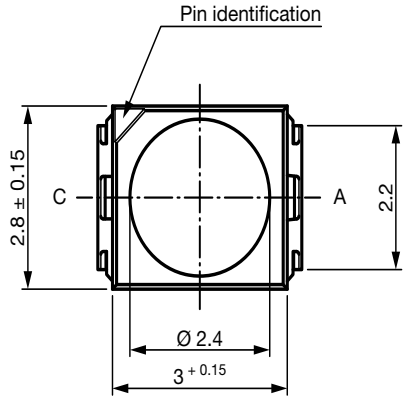

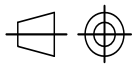

technical drawings according to DIN specifications

Drawing-No.: 6.541-5067.01-4
Issue: 7; 12.03.14

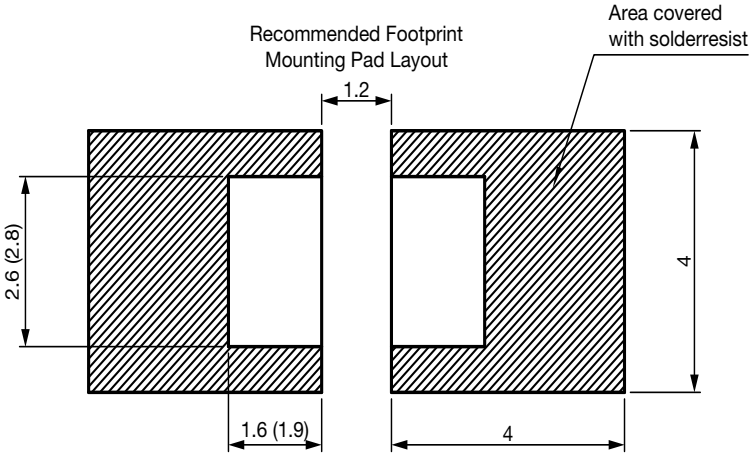

For technical questions, contact: LED@vishay.com
THIS DOCUMENT IS SUBJECT TO CHANGE WITHOUT NOTICE. THE PRODUCTS DESCRIBED HEREIN AND THIS DOCUMENT ARE SUBJECT TO SPECIFIC DISCLAIMERS, SET FORTH AT www.vishay.com/doc?91000

METHOD OF TAPING / POLARITY AND TAPE AND REEL

SMD LED (VLMx334..-SERIES)

Vishay's LEDs in SMD packages are available in an antistatic 8 mm blister tape (in accordance with DIN IEC 40 (CO) 564) for automatic component insertion. The blister tape is a plastic strip with impressed component cavities, covered by a top tape.

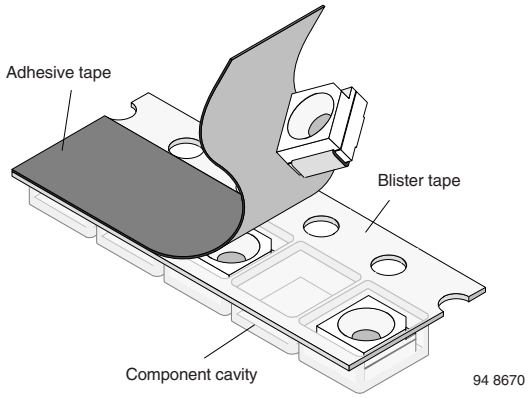

TAPING OF VLMx334..

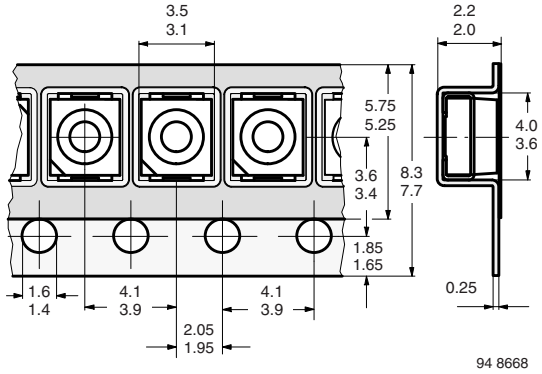

Fig. 10 - Tape Dimensions in mm for PLCC-2

REEL PACKAGE DIMENSION IN MILLIMETERS FOR SMD LEDS, TAPE OPTION GS08 (= 1500 PCS.)

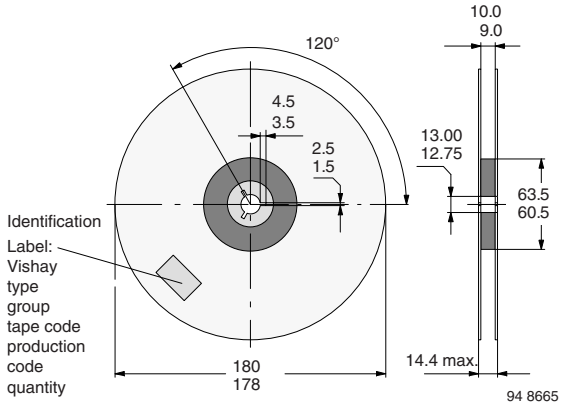

Fig. 11 - Reel Dimensions - GS08

SOLDERING PROFILE

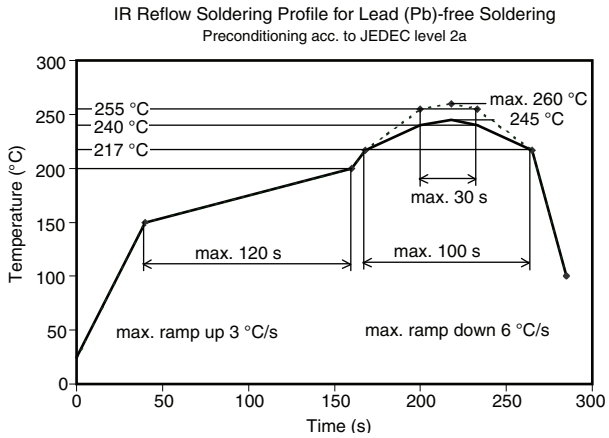

Fig. 12 - Vishay Lead (Pb)-free Reflow Soldering Profile (according to J-STD-020)

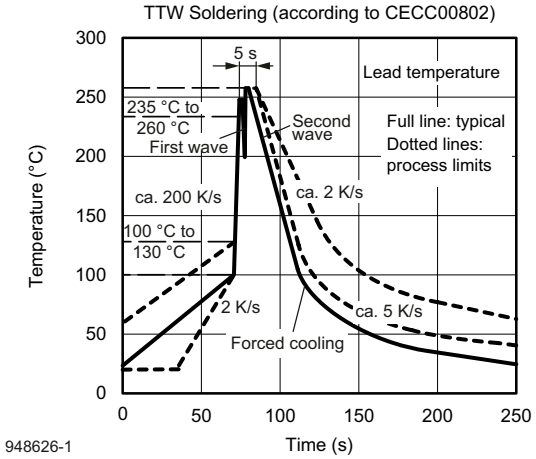

Fig. 13 - Double Wave Soldering of Opto Devices (all Packages)

PACKING INFORMATION			
PART	PIECES PER REEL	REELS PER BOX	MOQ [1]
VLMx334xxxx-GS08	1500	5	7500

Note

[1] MOQ = minumum order quantity

For technical questions, contact: LED@vishay.com
THIS DOCUMENT IS SUBJECT TO CHANGE WITHOUT NOTICE. THE PRODUCTS DESCRIBED HEREIN AND THIS DOCUMENT ARE SUBJECT TO SPECIFIC DISCLAIMERS, SET FORTH AT www.vishay.com/doc?91000

BAR CODE PRODUCT LABEL (example only)

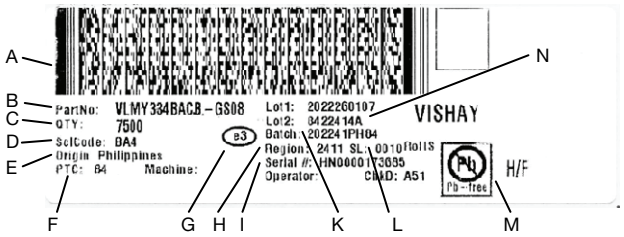

A. 2D barcode

B. Vishay part number

C. Quantity

D. PTC = selection code (binning)

E. Code of manufacturing plant

F. Batch = date code: year/week/plant code

G. Region code

H. SL = sales location

I. Terminations finishing

K. Lead (Pb)-free symbol

L. Halogen-free symbol

M. RoHS symbol

DRY PACKING

The reel is packed in an anti-humidity bag to protect the devices from absorbing moisture during transportation and storage.

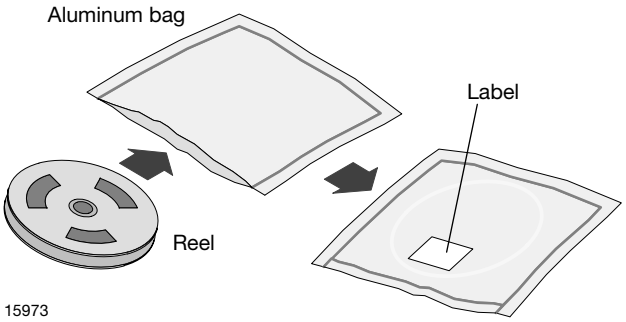

FINAL PACKING

The sealed reel is packed into a cardboard box. A secondary cardboard box is used for shipping purposes.

RECOMMENDED METHOD OF STORAGE

Dry box storage is recommended as soon as the aluminum bag has been opened to prevent moisture absorption. The following conditions should be observed, if dry boxes are not available:

- Storage temperature 10 °C to 30 °C
- Storage humidity ≤ 60 % RH max.

After more than 672 h under these conditions moisture content will be too high for reflow soldering.

In case of moisture absorption, the devices will recover to the former condition by drying under the following condition:

192 h at 40 °C + 5 °C / - 0 °C and < 5 % RH (dry air/nitrogen)
or
96 h at 60 °C + 5 °C and < 5 % RH for all device containers
or
24 h at 100 °C + 5 °C not suitable for reel or tubes.

An EIA JEDEC standard JESD22-A112 level 2a label is included on all dry bags.

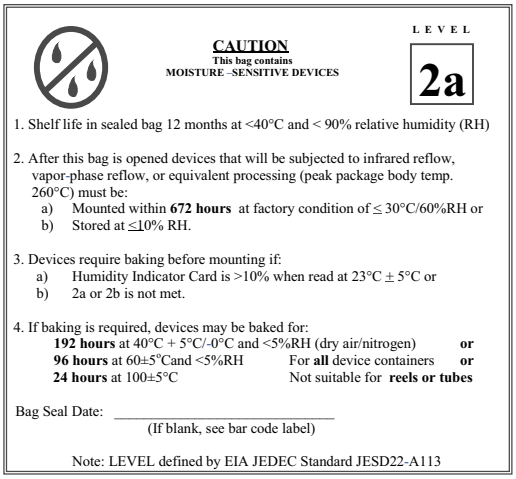

Example of JESD22-A112 level 2a label

ESD PRECAUTION

Proper storage and handling procedures should be followed to prevent ESD damage to the devices especially when they are removed from the antistatic shielding bag. Electrostatic sensitive devices warning labels are on the packaging.

VISHAY SEMICONDUCTORS STANDARD BAR CODE LABEL

The Vishay Semiconductors standard bar code labels are printed at final packing areas. The labels are on each packing unit and contain Vishay Semiconductors specific data.

For technical questions, contact: LED@vishay.com
THIS DOCUMENT IS SUBJECT TO CHANGE WITHOUT NOTICE. THE PRODUCTS DESCRIBED HEREIN AND THIS DOCUMENT ARE SUBJECT TO SPECIFIC DISCLAIMERS, SET FORTH AT www.vishay.com/doc?91000

Disclaimer

ALL PRODUCT, PRODUCT SPECIFICATIONS AND DATA ARE SUBJECT TO CHANGE WITHOUT NOTICE TO IMPROVE RELIABILITY, FUNCTION OR DESIGN OR OTHERWISE.

Vishay Intertechnology, Inc., its affiliates, agents, and employees, and all persons acting on its or their behalf (collectively, “Vishay”), disclaim any and all liability for any errors, inaccuracies or incompleteness contained in any datasheet or in any other disclosure relating to any product.

Vishay makes no warranty, representation or guarantee regarding the suitability of the products for any particular purpose or the continuing production of any product. To the maximum extent permitted by applicable law, Vishay disclaims (i) any and all liability arising out of the application or use of any product, (ii) any and all liability, including without limitation special, consequential or incidental damages, and (iii) any and all implied warranties, including warranties of fitness for particular purpose, non-infringement and merchantability.

Statements regarding the suitability of products for certain types of applications are based on Vishay's knowledge of typical requirements that are often placed on Vishay products in generic applications. Such statements are not binding statements about the suitability of products for a particular application. It is the customer's responsibility to validate that a particular product with the properties described in the product specification is suitable for use in a particular application. Parameters provided in datasheets and / or specifications may vary in different applications and performance may vary over time. All operating parameters, including typical parameters, must be validated for each customer application by the customer's technical experts. Product specifications do not expand or otherwise modify Vishay's terms and conditions of purchase, including but not limited to the warranty expressed therein.

Hyperlinks included in this datasheet may direct users to third-party websites. These links are provided as a convenience and for informational purposes only. Inclusion of these hyperlinks does not constitute an endorsement or an approval by Vishay of any of the products, services or opinions of the corporation, organization or individual associated with the third-party website. Vishay disclaims any and all liability and bears no responsibility for the accuracy, legality or content of the third-party website or for that of subsequent links.

Except as expressly indicated in writing, Vishay products are not designed for use in medical, life-saving, or life-sustaining applications or for any other application in which the failure of the Vishay product could result in personal injury or death. Customers using or selling Vishay products not expressly indicated for use in such applications do so at their own risk. Please contact authorized Vishay personnel to obtain written terms and conditions regarding products designed for such applications.

No license, express or implied, by estoppel or otherwise, to any intellectual property rights is granted by this document or by any conduct of Vishay. Product names and markings noted herein may be trademarks of their respective owners.

© 2024 VISHAY INTERTECHNOLOGY, INC. ALL RIGHTS RESERVED