Fully Integrated Proximity and Ambient Light Sensor With I²C Interface and Interrupt Function for Gesture Applications

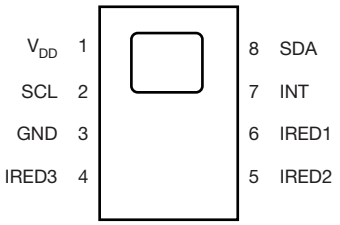

LINKS TO ADDITIONAL RESOURCES

3D Models | Design Tools | Related Documents

DESCRIPTION

VCNL4035X01 integrates a proximity sensor (PS), ambient light sensor (ALS), a muxx, and a driver for up to 3 external IREDs / LEDs into one small package. It incorporates photodiodes, amplifiers, and analog to digital converting circuits into a single chip by CMOS process. The 16-bit high resolution ALS offers excellent sensing capabilities with sufficient selections to fulfill most applications whether dark or high transparency lens design. Both ALS and PS programmable interrupt features of individual high and low thresholds offers the best utilization of resource and power saving on the microcontroller.

The proximity sensor features an intelligent cancellation scheme, so that cross talk phenomenon is eliminated effectively. To accelerate the PS response time, smart persistence prevents the misjudgment of proximity sensing but also keeps a fast response time. Active force mode, one time trigger by one instruction, is another good approach for more design flexibility to fulfill different kinds of applications with more power saving.

The adoption of patented Filtron™ technology achieves the closest ambient light spectral sensitivity to real human eye responses and offers the best background light cancellation capability (including sunlight) without utilizing the microcontrollers' resources. VCNL4035X01 provides an excellent temperature compensation capability for keeping output stable under various temperature configurations. ALS and PS functions are easily operated via the simple command format of I²C (SMBus compatible) interface protocol. Operating voltage ranges from 2.5 V to 3.6 V. VCNL4035X01 is packaged in a lead-free 8-pin QFN package, which offers the best market-proven reliability quality.

FEATURES

AUTOMOTIVE GRADE

Pb-free

e4

RoHS COMPLIANT

HALOGEN FREE

GREEN (5-2008)

- Package type: surface-mount
- Dimensions (L x W x H in mm): 4.0 x 2.36 x 0.75
- AEC-Q101 qualified
- Integrated modules: ambient light sensor (ALS), proximity sensor (PS), and signal conditioning ICL
- Operates ALS and PS in parallel structure
- Filtron™ technology adoption for robust background light cancellation
- Temperature compensation: -40 °C to +105 °C
- Low power consumption I²C (SMBus compatible) interface
- Output type: I²C bus (ALS / PS)
- Operation voltage: 2.5 V to 3.6 V
- Floor life: 168 h, MSL 3, according to J-STD-020
- Material categorization: for definitions of compliance please see www.vishay.com/doc?99912

PROXIMITY FUNCTION

- Immunity to red glow (≥ 890 nm IREDs)
- Programmable IRED sink current
- Intelligent cancellation to reduce cross talk phenomenon
- Smart persistence scheme to reduce PS response time
- Selectable for 12- / 16- bit PS output data

AMBIENT LIGHT FUNCTION

- High accuracy of ALS ± 10 %
- Fluorescent light flicker immunity
- Spectrum close to real human eye responses

INTERRUPT

- Programmable interrupt function for ALS and PS with upper and lower thresholds
- Adjustable persistence to prevent false triggers for ALS and PS

APPLICATIONS

- Handheld device
- Notebook, tablet PC
- Consumer device
- Industrial application

GESTURE APPLICATION

- 2D and 3D gesture function supported

For technical questions, contact: sensorstechsupport@vishay.com
THIS DOCUMENT IS SUBJECT TO CHANGE WITHOUT NOTICE. THE PRODUCTS DESCRIBED HEREIN AND THIS DOCUMENT ARE SUBJECT TO SPECIFIC DISCLAIMERS, SET FORTH AT www.vishay.com/doc?91000

PRODUCT SUMMARY								
PART NUMBER	OPERATING RANGE (mm)	OPERATING VOLTAGE RANGE (V)	I²C BUS VOLTAGE RANGE (V)	IRED PULSE CURRENT [2] (mA)	AMBIENT LIGHT RANGE (lx)	AMBIENT LIGHT RESOLUTION (lx)	OUTPUT CODE	ADC RESOLUTION PROXIMITY / AMBIENT LIGHT
VCNL4035X01	0 to 500 [1]	2.5 to 3.6	1.8 to 5.5	200	0.004 to 16 768	0.004	16 bit, I²C	16 bit / 16 bit

Notes

[1] Depending on external IRED

[2] Adjustable through I²C interface

ORDERING INFORMATION			
ORDERING CODE	PACKAGING	VOLUME [1]	REMARKS
VCNL4035X01-GS08	Tape and reel	MOQ: 1800 pcs	4.0 mm x 2.36 mm x 0.75 mm
VCNL4035X01-GS18		MOQ: 7000 pcs	
VCNL40351X01-GS08		MOQ: 1800 pcs	
VCNL40351X01-GS18		MOQ: 7000 pcs	
VCNL40352X01-GS08		MOQ: 1800 pcs	
VCNL40352X01-GS18		MOQ: 7000 pcs	
VCNL40353X01-GS08		MOQ: 1800 pcs	
VCNL40353X01-GS18		MOQ: 7000 pcs	

Note

[1] MOQ: minimum order quantity

SLAVE ADDRESS OPTIONS	
ORDERING CODE	SLAVE ADDRESS (7 bit)
VCNL4035X01-GS08	0x60
VCNL4035X01-GS18	
VCNL40351X01-GS08	0x51
VCNL40351X01-GS18	
VCNL40352X01-GS08	0x40
VCNL40352X01-GS18	
VCNL40353X01-GS08	0x41
VCNL40353X01-GS18	

ABSOLUTE MAXIMUM RATINGS (T_{amb} = 25 °C, unless otherwise specified)					
PARAMETER	TEST CONDITION	SYMBOL	MIN.	MAX.	UNIT
Supply voltage		V_{DD}	2.5	3.6	V
Operation temperature range		T_{amb}	-40	+105	°C
Storage temperature range		T_{stg}	-40	+110	°C

RECOMMENDED OPERATING CONDITIONS (T_{amb} = 25 °C, unless otherwise specified)					
PARAMETER	TEST CONDITION	SYMBOL	MIN.	MAX.	UNIT
Supply voltage		V_{DD}	2.5	3.6	V
Operation temperature range		T_{amb}	-40	+105	°C
I²C bus operating frequency		$f_{(I2CCLK)}$	10	400	kHz

For technical questions, contact: sensorstechsupport@vishay.com
THIS DOCUMENT IS SUBJECT TO CHANGE WITHOUT NOTICE. THE PRODUCTS DESCRIBED HEREIN AND THIS DOCUMENT ARE SUBJECT TO SPECIFIC DISCLAIMERS, SET FORTH AT www.vishay.com/doc?91000

PIN DESCRIPTIONS			
PIN ASSIGNMENT	**SYMBOL**	**TYPE**	**FUNCTION**
1	V_{DD}	-	Power supply input
2	SCL	I	I^2C digital bus clock input
3	GND	-	Ground
4	IRED3	I	Cathode (IRED3) connection
5	IRED2	I	Cathode (IRED2) connection
6	IRED1	I	Cathode (IRED1) connection
7	INT	O	Interrupt pin
8	SDA	I / O (open drain)	I^2C data bus data input / output

BASIC CHARACTERISTICS (T_{amb} = 25 °C, unless otherwise specified)							
PARAMETER		**TEST CONDITION**	**SYMBOL**	**MIN.**	**TYP.**	**MAX.**	**UNIT**
Supply voltage			V_{DD}	2.5	-	3.6	V
Supply current		Excluded LED driving	I_{DD}	-	300	-	µA
		Light condition = dark, V_{DD} = 3.3 V	I_{DD} (SD)	-	0.2	-	µA
I^2C supply voltage			$V_{PULL\ UP}$	1.8	-	5.5	V
ALS shut down		ALS disable, PS enable	I_{ALSSD}	-	200	-	µA
PS shut down		ALS enable, PS disable	I_{PSSD}	-	260	-	µA
I^2C signal input	Logic high	V_{DD} = 3.3 V	V_{IH}	1.55	-	-	V
	Logic low		V_{IL}	-	-	0.4	
	Logic high	V_{DD} = 2.6 V	V_{IH}	1.4	-	-	V
	Logic low		V_{IL}	-	-	0.4	
Peak sensitivity wavelength of ALS			λ_p	-	550	-	nm
Peak sensitivity wavelength of PS			λ_p	-	850	-	nm
Full ALS counts		16-bit resolution		-	-	65 535	steps
Full PS counts		12-bit / 16-bit resolution		-	-	4096 / 65 535	steps
ALS sensing tolerance		White LED light source		-	-	± 10	%
Detectable intensity	Minimum	IT = 800 ms, 1 step (1)(2)		-	0.004	-	lx
	Maximum	IT = 50 ms, 65 535 step (1)(2)		-	16 768	-	
ALS dark offset		IT = 50 ms, normal sensitivity (1)		0	-	3	steps
PS detection range		Kodak gray card (3)		0	-	500	mm
Operating temperature range			T_{amb}	-40	-	+105	°C
LED_Anode voltage				-	-	5.5	V
IRED driving current		(4)		-	-	200	mA

Notes

(1) Test condition: V_{DD} = 3.3 V, temperature: 25 °C

(2) Maximum detection range to ambient light can be determined by ALS refresh time adjustment and two sensitivity bits (ALS_HD and ALS_NS). Refer to table “ALS Resolution and Maximum Detection Range”

(3) Depending on external IRED

(4) Based on IRED on / off duty ratio = 1/40, 1/80, 1/160, and 1/320

For technical questions, contact: sensorstechsupport@vishay.com
THIS DOCUMENT IS SUBJECT TO CHANGE WITHOUT NOTICE. THE PRODUCTS DESCRIBED HEREIN AND THIS DOCUMENT ARE SUBJECT TO SPECIFIC DISCLAIMERS, SET FORTH AT www.vishay.com/doc?91000

I²C BUS TIMING CHARACTERISTICS (T_{amb} = 25 °C, unless otherwise specified)						
PARAMETER	**SYMBOL**	**STANDARD MODE**		**FAST MODE**		**UNIT**
		MIN.	**MAX.**	**MIN.**	**MAX.**	
Clock frequency	$f_{(SMBCLK)}$	10	100	10	400	kHz
Bus free time between start and stop condition	$t_{(BUF)}$	4.7	-	1.3	-	µs
Hold time after (repeated) start condition; after this period, the first clock is generated	$t_{(HDSTA)}$	4.0	-	0.6	-	µs
Repeated start condition setup time	$t_{(SUSTA)}$	4.7	-	0.6	-	µs
Stop condition setup time	$t_{(SUSTO)}$	4.0	-	0.6	-	µs
Data hold time	$t_{(HDDAT)}$	-	3450	-	900	ns
Data setup time	$t_{(SUDAT)}$	250	-	100	-	ns
I²C clock (SCK) low period	$t_{(LOW)}$	4.7	-	1.3	-	µs
I²C clock (SCK) high period	$t_{(HIGH)}$	4.0	-	0.6	-	µs
Clock / data fall time	$t_{(F)}$	-	300	-	300	ns
Clock / data rise time	$t_{(R)}$	-	1000	-	300	ns

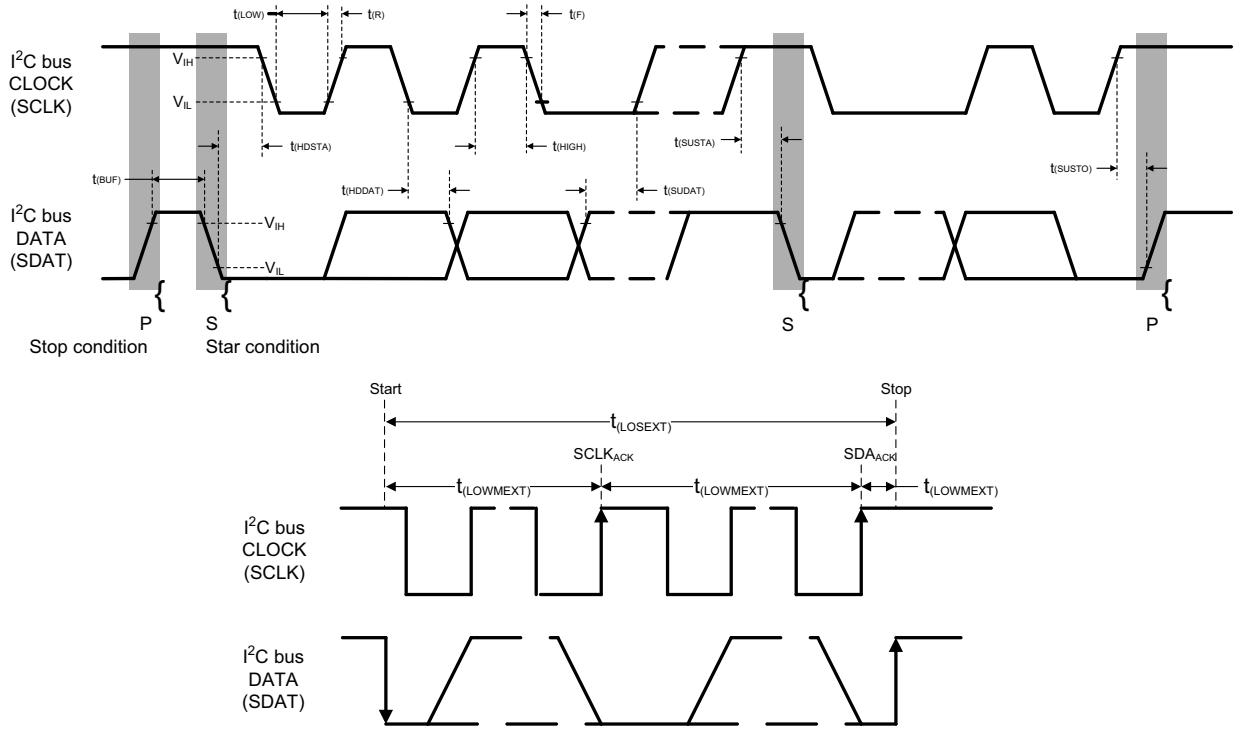

Fig. 1 - I²C Bus Timing Diagram

For technical questions, contact: sensorstechsupport@vishay.com
THIS DOCUMENT IS SUBJECT TO CHANGE WITHOUT NOTICE. THE PRODUCTS DESCRIBED HEREIN AND THIS DOCUMENT ARE SUBJECT TO SPECIFIC DISCLAIMERS, SET FORTH AT www.vishay.com/doc?91000

PARAMETER TIMING INFORMATION

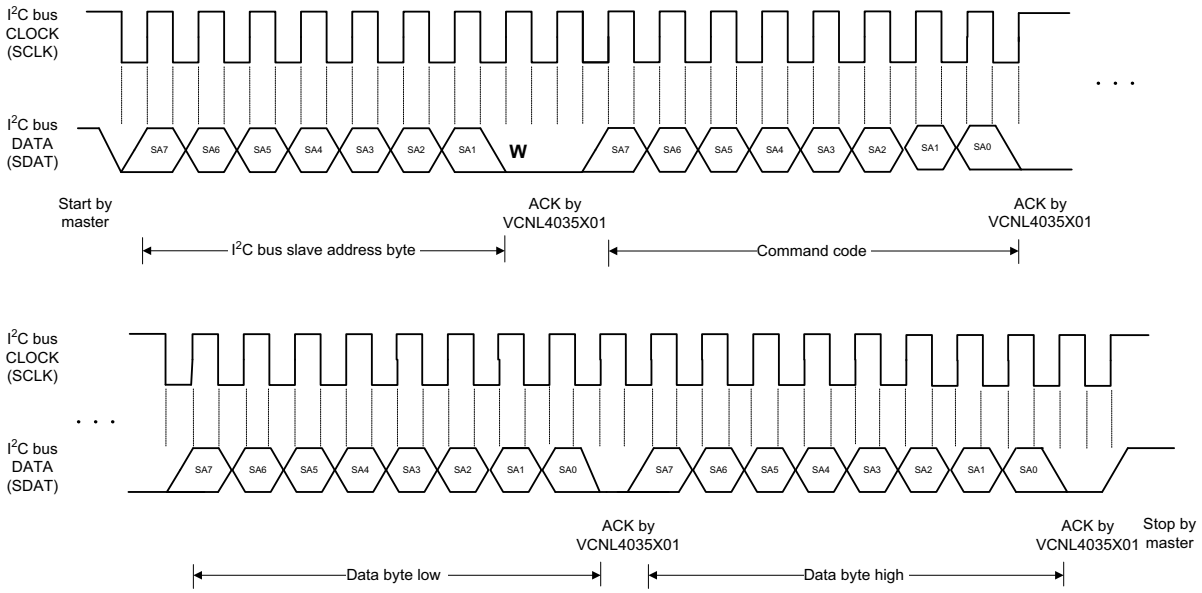

Fig. 2 - I2C Bus Timing for Sending Word Command Format

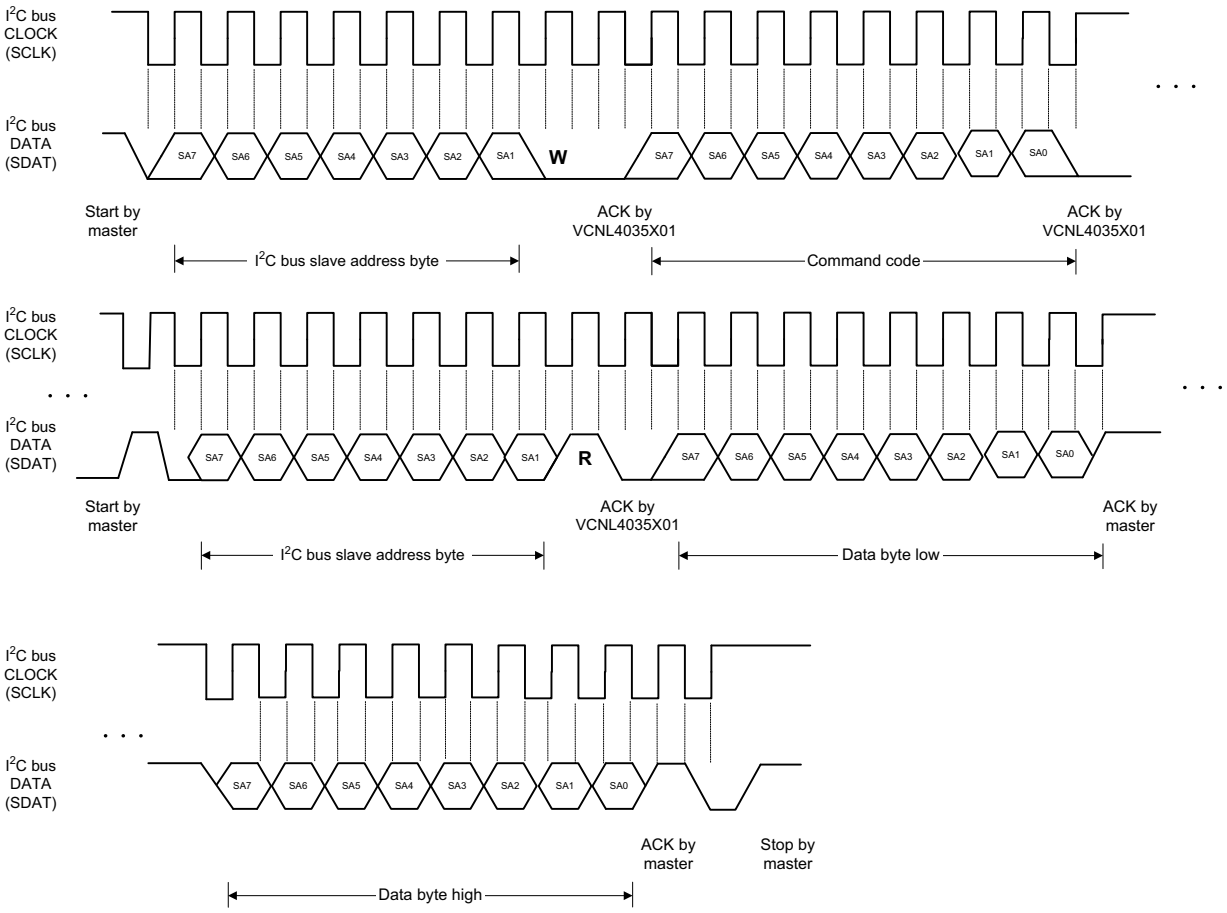

Fig. 3 - I2C Bus Timing for Receiving Word Command Format

For technical questions, contact: sensorstechsupport@vishay.com
THIS DOCUMENT IS SUBJECT TO CHANGE WITHOUT NOTICE. THE PRODUCTS DESCRIBED HEREIN AND THIS DOCUMENT ARE SUBJECT TO SPECIFIC DISCLAIMERS, SET FORTH AT www.vishay.com/doc?91000

TYPICAL PERFORMANCE CHARACTERISTICS (T_{amb} = 25 °C, unless otherwise specified)

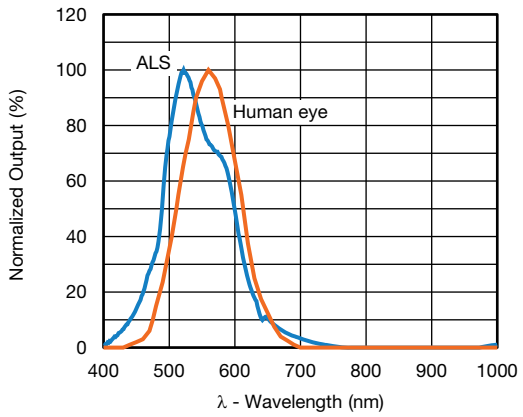

Fig. 4 - Normalized Spectral Response (ALS channel)

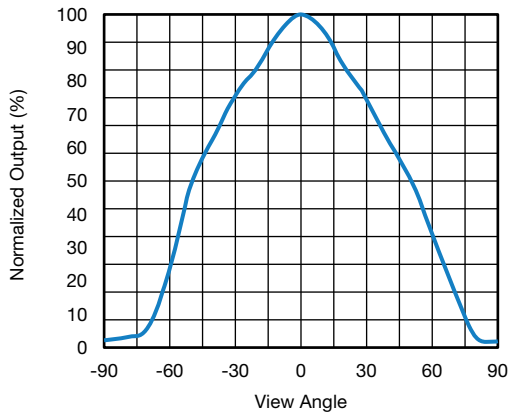

Fig. 7 - ALS View Angle

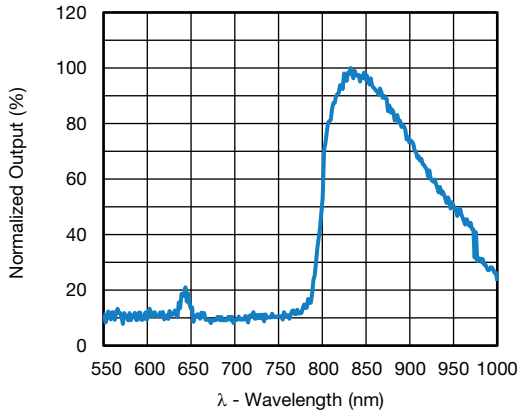

Fig. 5 - Normalized Spectral Response (PS channel)

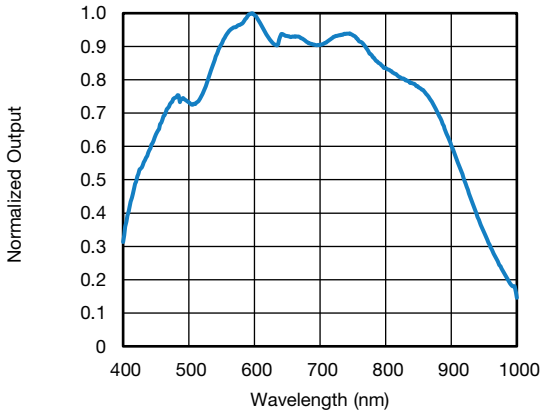

Fig. 8 - White Channel Spectral Response

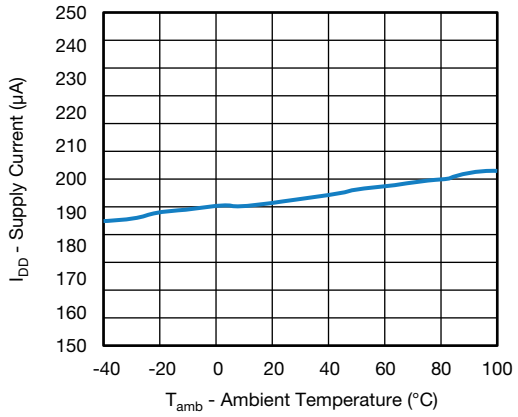

Fig. 6 - Supply Current vs. Ambient Temperature

For technical questions, contact: sensorstechsupport@vishay.com
THIS DOCUMENT IS SUBJECT TO CHANGE WITHOUT NOTICE. THE PRODUCTS DESCRIBED HEREIN AND THIS DOCUMENT ARE SUBJECT TO SPECIFIC DISCLAIMERS, SET FORTH AT www.vishay.com/doc?91000

APPLICATION INFORMATION

Pin Connection with the Host

VCNL4035X01 integrates proximity sensor, ambient light Sensor, and an IRED driver with three inputs for external LEDs / IREDs all together with I²C interface. It is very easy for the baseband (CPU) to access PS and ALS output data via I²C interface without extra software algorithms. The hardware schematic is shown in the following diagram.

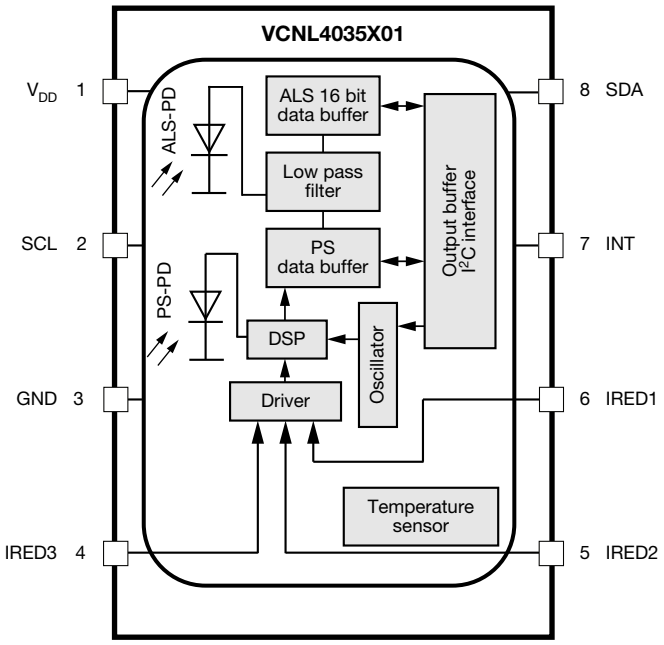

Fig. 9 - Detailed Block Diagram

Digital Interface

VCNL4035X01 is available in four different salve addresses (0x60, 0x51, 0x40, and 0x41). Please refer to the table "Salve Address Options" at the beginning of the datasheet for an overview of the corresponding ordering codes. All operations can be controlled by the command register. The simple command structure helps users easily program the operation setting and latch the light data from VCNL4035X01. As Fig. 10 shows, VCNL4035X01's I²C command format is simple for read and write operations between VCNL4035X01 and the host. The white sections indicate host activity and the gray sections indicate VCNL4035X01's acknowledgment of the host access activity. Write word and read word protocol is suitable for accessing registers particularly for 16-bit data ALS and 12-bit / 16-bit PS data. Interrupt can be cleared by reading data out from register: INT_Flag. All command codes should follow read word and write word protocols.

Fig. 10 - Write Word and Read Word Protocol

For technical questions, contact: sensorstechsupport@vishay.com
THIS DOCUMENT IS SUBJECT TO CHANGE WITHOUT NOTICE. THE PRODUCTS DESCRIBED HEREIN AND THIS DOCUMENT ARE SUBJECT TO SPECIFIC DISCLAIMERS, SET FORTH AT www.vishay.com/doc?91000

Function Description

VCNL4035X01 applies a 16-bit high resolution ALS that provides the best ambient light sensing capability down to 0.004 lux/step which works well under a low transmittance lens design (dark lens). A flexible interrupt function of ALS (register: ALS_CONF) is also supported. The INT signal will not be asserted by VCNL4035X01 if the ALS value is not over high INT threshold window level, or lower than low INT threshold window level of ALS. As long as the ALS INT is asserted, the host can read the data from VCNL4035X01. VCNL4035X01 detects different light sources such as fluorescent light, incandescent light, sunlight, and white LED with high accuracy ALS data output after detecting algorithm is implemented.

For proximity sensor function, VCNL4035X01 supports different kinds of mechanical designs to achieve the best proximity detection performance for any color of object with more flexibility. The basic PS function settings, such as duty ratio, integration time, interrupt, and PS enable / disable, and persistence, are handled by the register: PS_CONF1. Duty ratio controls the PS response time. Integration time represents the duration of the energy being received. The interrupt is asserted when the PS detection levels over the high threshold level setting (register: PS_THDH) or lower than low threshold (register: PS_THDL). If the interrupt function is enabled, the host reads the PS output data from VCNL4035X01 that saves host loading from periodically reading PS data. More than that, INT flag (register: INT_Flag) indicates the behavior of INT triggered under different conditions. PS persistence (PS_PERS) sets up the PS INT asserted conditions as long as the PS output value continually exceeds the threshold level. The intelligent cancellation level can be set on register: PS_CANC to reduce the cross talk phenomenon.

VCNL4035X01 also supports an easy use of proximity detection logic output mode that outputs just high / low levels saving loading from the host. Normal operation mode or proximity detection logic output mode can be selected on the register: PS_MS. A smart persistence is provided to get faster PS response time and prevent false trigger for PS. Descriptions of each slave address operation are shown in table 1

TABLE 1 - COMMAND CODE AND REGISTER DESCRIPTION

COMMAND CODE	DATE BYTE LOW / HIGH	REGISTER NAME	R / W	DEFAULT VALUE	FUNCTION DESCRIPTION
0x00	L	ALS_CONF1	R / W	0x01	ALS integration time, ALS dynamic range, persistence, interrupt, and function enable / disable
	H	ALS_CONF2	R / W	0x01	ALS sensitivity, white channel enable / disable
0x01	L	ALS_THDH_L	R / W	0x00	ALS high interrupt threshold LSB byte
	H	ALS_THDH_M	R / W	0x00	ALS high interrupt threshold MSB byte
0x02	L	ALS_THDL_L	R / W	0x00	ALS low interrupt threshold LSB byte
	H	ALS_THDL_M	R / W	0x00	ALS low interrupt threshold MSB byte
0x03	L	PS_CONF1	R / W	0x01	PS duty ratio, integration time, persistence, and PS enable / disable
	H	PS_CONF2	R / W	0x00	PS gain, PS output resolution, PS / gesture interrupt trigger
0x04	L	PS_CONF3	R / W	0x00	PS smart persistence, active force mode, IRED select
	H	PS_MS	R / W	0x00	LED current selection
0x05	L	PS_CANC_L	R / W	0x00	PS cancellation level setting
	H	PS_CANC_M	R / W	0x00	PS cancellation level setting
0x06	L	PS_THDL_L	R / W	0x00	PS low interrupt threshold setting LSB byte
	H	PS_THDL_M	R / W	0x00	PS low interrupt threshold setting MSB byte
0x07	L	PS_THDH_L	R / W	0x00	PS high interrupt threshold setting LSB byte
	H	PS_THDH_M	R / W	0x00	PS high interrupt threshold setting MSB byte
0x08	L	PS1_Data_L	R	0x00	PS1 LSB output data
	H	PS1_Data_M	R	0x00	PS1 MSB output data
0x09	L	PS2_Data_L	R	0x00	PS2 LSB output data
	H	PS2_Data_M	R	0x00	PS2 MSB output data
0x0A	L	PS3_Data_L	R	0x00	PS3 LSB output data
	H	PS3_Data_M	R	0x00	PS3 MSB output data
0x0B	L	ALS_Data_L	R	0x00	ALS LSB output data
	H	ALS_Data_M	R	0x00	ALS MSB output data
0x0C	L	White_Data_L	R	0x00	White LSB output data
	H	White_Data_M	R	0x00	White MSB output data
0x0D	L	Reserved	R	0x00	Reserved
	H	INT_Flag	R	0x00	ALS, PS interrupt flags, PS sunlight protection mode flags
0x0E	L	ID_L	R	0x80	Device ID LSB
	H	ID_M	R	0x00	For version with 0x60 as device address; 0x10 for version with 0x51, 0x20 for version with 0x40 and 0x30 for version with 0x41 as device address

Note

- All of reserved register are used for internal test. Please keep as default setting

For technical questions, contact: sensorstechsupport@vishay.com
THIS DOCUMENT IS SUBJECT TO CHANGE WITHOUT NOTICE. THE PRODUCTS DESCRIBED HEREIN AND THIS DOCUMENT ARE SUBJECT TO SPECIFIC DISCLAIMERS, SET FORTH AT www.vishay.com/doc?91000

Command Register Format

VCNL4035X01 provides an 8-bit command register for ALS and PS controlling independently. The description of each command format is shown in following tables.

TABLE 2 - REGISTER: ALS_CONF1 DESCRIPTION									
REGISTER NAME		**COMMAND CODE: 0x00_L (0x00 DATA BYTE LOW)**							
Command	Bit	7	6	5	4	3	2	1	0
		COMMAND CODE: 0x00_L (0x00 DATA BYTE LOW)							
Command	Bit	Description							
ALS_IT	7 : 5	(0 : 0 : 0) = 50 ms; (0 : 0 : 1) = 100 ms; (0 : 1 : 0) = 200 ms; (0 : 1 : 1) = 400 ms; (1 : 0 : 0) to (1 : 1 : 1) = 800 ms ALS integration time setting, longer integration time has higher sensitivity							
ALS_HD	4	0 = typical dynamic range x 1, 1 = typical dynamic range x 2							
ALS_PERS	3 : 2	(0 : 0) = 1, (0 : 1) = 2, (1 : 0) = 4, (1 : 1) = 8 ALS interrupt persistence setting							
ALS_INT_EN	1	0 = ALS interrupt disable, 1 = ALS interrupt enable							
ALS_SD	0	0 = ALS power on, 1 = ALS shut down, default = 1							

TABLE 3 - REGISTER: ALS_CONF2 DESCRIPTION		
		COMMAND CODE: 0x00_H (0x00 DATA BYTE HIGH)
Command	Bit	Description
Reserved	7 : 2	Default = (0 : 0 : 0 : 0 : 0 : 0)
ALS_NS	1	0 =typical sensitivity x 2, 1 = typical sensitivity x 1
WHITE_SD	0	0 = WHITE channel power on, 1 = WHITE channel shut down, default = 1

TABLE 4 - REGISTER ALS_THDH_L AND ALS_THDH_M DESCRIPTION		
		COMMAND CODE: 0x01_L (0x01 DATA BYTE LOW) OR 0x01_H (0x01 DATA BYTE HIGH)
Register	Bit	Description
ALS_THDH_L	7 : 0	0x00 to 0xFF, ALS high interrupt threshold LSB byte
ALS_THDH_M	7 : 0	0x00 to 0xFF, ALS high interrupt threshold MSB byte

TABLE 5 - REGISTER: ALS_THDL_L AND ALS_THDL_M DESCRIPTION		
		COMMAND CODE: 0x02_L (0x02 DATA BYTE LOW) AND 0x02_H (0x02 DATA BYTE HIGH)
Register	Bit	Description
ALS_THDL_L	7 : 0	0x00 to 0xFF, ALS low interrupt threshold LSB byte
ALS_THDL_M	7 : 0	0x00 to 0xFF, ALS low interrupt threshold MSB byte

TABLE 6 - REGISTER: PS_CONF1 DESCRIPTION		
REGISTER: PS_CONF1		**COMMAND CODE: 0x03_L (0x03 DATA BYTE LOW)**
Command	Bit	Description
PS_Duty	7 : 6	(0 : 0) = 1/40, (0 : 1) = 1/80, (1 : 0) = 1/160, (1 : 1) = 1/320 PS IRED on / off duty ratio setting
PS_PERS	5 : 4	(0 : 0) = 1, (0 : 1) = 2, (1 : 0) = 3, (1 : 1) = 4 PS interrupt persistence setting
PS_ IT	3 : 1	(0 : 0 : 0) = 1T, (0 : 0 : 1) = 1.5T, (0 : 1 : 0) = 2T, (0 : 1 : 1) = 2.5T, (1 : 0 : 0) = 3T, (1 : 0 : 1) = 3.5T, (1 : 1 : 0) = 4T, (1 : 1 : 1) = 8T, PS integration time setting
PS_SD	0	0 = PS power on, 1 = PS shut down, default = 1

THIS DOCUMENT IS SUBJECT TO CHANGE WITHOUT NOTICE. THE PRODUCTS DESCRIBED HEREIN AND THIS DOCUMENT ARE SUBJECT TO SPECIFIC DISCLAIMERS, SET FORTH AT www.vishay.com/doc?91000

TABLE 7 - REGISTER: PS_CONF2 DESCRIPTION		
REGISTER: PS_CONF2		**COMMAND CODE: 0x03_H (0x03 DATA BYTE HIGH)**
Command	Bit	Description
GESTURE_INT_EN	7	0 = disabled, 1 = enabled
GESTURE_MODE	6	0 = disabled, 1 = enabled
PS_Gain	5 : 4	(0 : 0) and (0 : 1) = two step mode, (1 : 0) = single mode x 8, (1 : 1) = single mode x 1
PS_HD	3	0 = PS output is 12 bits, 1 = PS output is 16 bits
PS_NS	2	0 = typical sensitivity (two step mode x 4), 1 = typical sensitivity mode (two step mode)
PS_INT	1 : 0	(0 : 0) = interrupt disable, (0 : 1) = trigger by closing, (1 : 0)= trigger by away, (1 : 1) = trigger by closing and away

TABLE 8 - REGISTER: PS_CONF3 DESCRIPTION		
REGISTER: PS_CONF3		**COMMAND CODE: 0x04_L (0x04 DATA BYTE LOW)**
Command	Bit	Description
LED_I_LOW	7	0 = disabled = normal current, 1 = enabled = 1/10 of normal current, with that the current is accordingly: 5 mA, 7.5 mA, 10 mA, 12 mA, 14 mA, 16 mA, 18 mA, 20 mA
IRED select	6 : 5	(0 : 0) = IRED1, (0 : 1) = IRED2, (1 : 0) = IRED3, (1 : 1) = IRED3
PS_SMART_PERS	4	0 = disable; 1 = enable PS smart persistence
PS_AF	3	0 = active force mode disable (normal mode), 1 = active force mode enable
PS_TRIG	2	0 = no PS active force mode trigger, 1 = trigger one time cycle VCNL4035X01 output one cycle data every time host writes in '1' to sensor. The state returns to '0' automatically.
PS_MS	1	0 = proximity normal operation with interrupt function 1 = proximity detection logic output mode enable
PS_SC_EN	0	0 = turn off sunlight cancel; 1 = turn on sunlight cancel PS sunlight cancel function enable setting

TABLE 9 - REGISTER: PS_MS DESCRIPTION		
REGISTER: PS_MS		**COMMAND CODE: 0x04_H (0x04 DATA BYTE HIGH)**
Command	Bit	Description
Reserved	7	0
PS_SC_CUR	6 : 5	(0 : 0) = 1 x typical sunlight cancel current, (0 : 1) = 2 x typical sunlight cancel current, (1 : 0) = 4 x typical sunlight cancel current, (1 : 1) = 8 x typical sunlight cancel current
PS_SP	4	0 = typical sunlight capability, 1 = 1.5 x typical sunlight capability
PS_SPO	3	0 = output is 00h in sunlight protect mode, 1 = output is FFh in sunlight protect mode,
LED_I	2 : 0	(0 : 0 : 0) = 50 mA; (0 : 0 : 1) = 75 mA; (0 : 1 : 0) = 100 mA; (0 : 1 : 1) = 120 mA (1 : 0 : 0) = 140 mA; (1 : 0 : 1) = 160 mA; (1 : 1 : 0) = 180 mA; (1 : 1 : 1) = 200 mA LED current selection setting

TABLE 10 - REGISTER PS_CANC_L AND PS_CANC_M DESCRIPTION		
		COMMAND CODE: 0x05_L (0x05 DATA BYTE LOW) AND 0x05_H (0x05 DATA BYTE HIGH)
Register	Bit	Description
PS_CANC_L	7 : 0	0x00 to 0xFF, PS cancellation level setting_LSB byte
PS_CANC_M	7 : 0	0x00 to 0xFF, PS cancellation level setting_MSB byte

TABLE 11 - REGISTER: PS_THDL_L AND PS_THDL_M DESCRIPTION		
		COMMAND CODE: 0x06_L (0x06 DATA BYTE LOW) AND 0x06_H (0x06 DATA BYTE HIGH)
Register	Bit	Description
PS_THDL_L	7 : 0	0x00 to 0xFF, PS interrupt low threshold setting_LSB byte
PS_THDL_M	7 : 0	0x00 to 0xFF, PS interrupt low threshold setting_MSB byte

THIS DOCUMENT IS SUBJECT TO CHANGE WITHOUT NOTICE. THE PRODUCTS DESCRIBED HEREIN AND THIS DOCUMENT ARE SUBJECT TO SPECIFIC DISCLAIMERS, SET FORTH AT www.vishay.com/doc?91000

TABLE 12 - REGISTER: PS_THDH_L AND PS_THDH_M DESCRIPTION		
		COMMAND CODE: 0x07_L (0x07 DATA BYTE LOW) AND 0x07_H (0x07 DATA BYTE HIGH)
Register	Bit	Description
PS_THDH_L	7 : 0	0x00 to 0xFF, PS interrupt high threshold setting_LSB byte
PS_THDH_M	7 : 0	0x00 to 0xFF, PS interrupt high threshold setting_MSB byte

TABLE 13 - READ OUT REGISTER DESCRIPTION			
Register	Command Code	Bit	Description
PS1_Data_L	0x08_L (0x08 data byte low)	7 : 0	0x00 to 0xFF, PS1 LSB output data
PS1_Data_M	0x08_H (0x08 data byte high)	7 : 0	0x00 to 0xFF, PS1 MSB output data
PS2_Data_L	0x09_L (0x09 data byte low)	7 : 0	0x00 to 0xFF, PS2 LSB output data
PS2_Data_M	0x09_H (0x09 data byte high)	7 : 0	0x00 to 0xFF, PS2 MSB output data
PS3_Data_L	0x0A_L (0x0A data byte low)	7 : 0	0x00 to 0xFF, PS3 LSB output data
PS3_Data_M	0x0A_H (0x0A data byte high)	7 : 0	0x00 to 0xFF, PS3 MSB output data
ALS_Data_L	0x0B_L (0x0B data byte low)	7 : 0	0x00 to 0xFF, ALS LSB output data
ALS_Data_M	0x0B_H (0x0B data byte high)	7 : 0	0x00 to 0xFF, ALS MSB output data
White_Data_L	0x0C_L (0x0C data byte low)	7 : 0	0x00 to 0xFF, white LSB output data
White_Data_M	0x0C_H (0x0C data byte high)	7 : 0	0x00 to 0xFF, white LSB output data
Reserved	0x0D_L (0x0D data byte low)	7 : 0	0x00
INT_Flag	0x0D_H (0x0D data byte high)	7 6 5 4 3 2 1 0	GESTURE_DATA_READY_FLAG PS3_SPFLAG, PS entering protection mode ALS_IF_L, ALS crossing low THD INT trigger event ALS_IF_H, ALS crossing high THD INT trigger event PS2_SPFLAG, PS entering protection mode PS1_SPFLAG, PS entering protection mode PS_IF_CLOSE, PS rises above PS_THDH INT trigger event PS_IF_AWAY, PS drops below PS_THDL INT trigger event
ID_L	0x0E_H (0x0E data byte low)	7 : 0	0x80
ID_M	0x0E_H (0x0E data byte high)	7 : 6 5 : 4 3 : 0	(0 : 0) (0:0) = slave address = 0x60 (7-bit); (0:1) = slave address = 0x51 (7-bit); (1:0) = slave address = 0x40 (7-bit); (1:1) = slave address = 0x41 (7-bit) Version code default = (0 : 0 : 0 : 0)

Adjustable Sampling Time

VCNL4035X01's embedded LED driver drives up to 3 external IREDs by a pulsed duty cycle. The IRED on / off duty ratio is programmable by I^2C command at register: PS_Duty which is related to the current consumption and PS response time. The higher the duty ratio adopted, the faster response time achieved with higher power consumption. For example, PS_Duty = 1/320, peak IRED current = 100 mA, averaged current consumption is 100 mA/320 = 0.3125 mA.

Initialization

VCNL4035X01 includes default values for each register. As long as power is on, it is ready to be controlled by host via I^2C bus.

For technical questions, contact: sensorstechsupport@vishay.com
THIS DOCUMENT IS SUBJECT TO CHANGE WITHOUT NOTICE. THE PRODUCTS DESCRIBED HEREIN AND THIS DOCUMENT ARE SUBJECT TO SPECIFIC DISCLAIMERS, SET FORTH AT www.vishay.com/doc?91000

Threshold Window Setting

- ALS Threshold Window Setting (Applying ALS INT)

  Register: ALS_THDH_L and ALS_THDH_M defines 16-bit ALS high threshold data for LSB byte and MSB byte. Register: ALS_THDL_L and ALS_THDL_M defines 16-bit ALS low threshold data for LSB byte and MSB byte. As long as ALS INT function is enabled, INT will be asserted once the ALS data exceeds ALS_THDH or goes below ALS_THDL. To easily define the threshold range, multiply the value of the resolution (lux/step) by the threshold level (refer to table 14)

TABLE 14 - ALS RESOLUTION AND MAXIMUM DETECTION RANGE

ALS_IT		SENSITIVITY	MAXIMUM DETECTION RANGE
ALS_IT (7 : 5)	INTEGRATION TIME (typ.)	UNIT (lux/step)	UNIT (lux)
(0, 0, 0)	50 ms	0.064	4192
(0, 0, 1)	100 ms	0.032	2096
(0, 1, 0)	200 ms	0.016	1048
(0, 1, 1)	400 ms	0.008	524
(1, 0, 0) to (1, 1, 1)	800 ms	0.004	262

- ALS HD and ALS_NS
  These two options enhance the dynamic range by a factor of two each.
  With this the sensitivity shown within table 14 will be reduced by the factor 2, but the maximum possible detection range will be doubled for both options. With this the max. detection range goes up to 4192 lx x 2 x 2 = 16 768 lx
- ALS Persistence

  The ALS INT is asserted as long as the ALS value is higher or lower than the threshold window when ALS_PERS (1, 2, 4, 8 times) is set to one time. If ALS_PERS is set to four times, then the ALS INT will not be asserted if the ALS value is not over (or lower) than the threshold window for four continued refresh times (integration time)
- Programmable PS Threshold
  VCNL4035X01 provides both high and low thresholds for PS (register: PS_THDL, PS_THDH)
- PS Persistence
  The PS persistence function (PS_PERS, 1, 2, 3, 4) helps to avoid false trigger of the PS INT. For example, if PS_PERS = 3 times, the PS INT will not be asserted unless the PS value is greater than the PS threshold (PS_THDH) value for three periods of time continuously
- PS Active Force mode
  An extreme power saving way to use PS is to apply PS active force (register: PS_CONF3 command: PS_FOR = 1) mode. Anytime host would like to read out just one of PS data, write in '1' at register: PS_CONF3 command: PS_FOR_Trig. Without commands placed, there is no PS data output. VCNL4035X01 stays in standby mode constantly
- PS detection object
  Any color of object is detectable by VCNL4035X01

Data Access

All of VCNL4035X01 command registers are readable. To access 16-bit high resolution ALS output data, it is suitable to use read word protocol to read out data by just one command at register: ALS_DataL and ALS_DataM. To represent the 16-bit data of ALS, it has to apply two bytes. One byte is for LSB, and the other byte is for MSB as shown in table 18. In terms of reading out 8-bit PS data, it is also very convenient to read PS at register: PS_Data.

TABLE 15 - 16-BIT ALS DATA FORMAT

	VCNL4035X01															
Bit	15	14	13	12	11	10	9	8	7	6	5	4	3	2	1	0
Register	ALS_DataM								ALS_DataL							

Intelligent Cancellation

VCNL4035X01 provides an intelligent cancellation method to reduce cross talk phenomenon for the proximity sensor. The output data will be subtracted by the input value on register: PS_CANC.

THIS DOCUMENT IS SUBJECT TO CHANGE WITHOUT NOTICE. THE PRODUCTS DESCRIBED HEREIN AND THIS DOCUMENT ARE SUBJECT TO SPECIFIC DISCLAIMERS, SET FORTH AT www.vishay.com/doc?91000

Interruption (INT)

VCNL4035X01 has ALS and PS interrupt feature operated by a single pin “INT”. The purpose of the interrupt feature is to actively inform the host once INT has been asserted. With the interrupt function applied, the host does not need to be constantly pulling data from the sensor, but to read data from the sensor while receiving interrupt request from the sensor. As long as the host enables ALS interrupt (register: ALS_INT_EN) or PS interrupt (register: PS_INT) function, the level of INT pin (pin 7) is pulled low once INT asserted. All registers are accessible even if INT is asserted.

ALS INT asserted when ALS value cross over the value set by register: ALS_THDH or lower than the value set by register: ALS_THDL. To effectively adopt PS INT function, it is recommended to use PS detection mechanism at register: PS_INTT = 1 for the best PS detection performance which can be adjusted by high / low THD level of PS. PS INT trigger way is defined by register: PS_INT.

Interruption Flag

Register: INT_Flag represents all of interrupt trigger status for ALS and PS. Any flag value changes from ‘0’ to ‘1’ state, the level of INT pin will be pulled low. As long as host reads INT_Flag data, the bit will change from ‘1’ state to ‘0’ state after reading out, the INT level will be returned to high afterwards.

PROXIMITY DETECTION LOGIC OUTPUT MODE

VCNL4035X01 provides a proximity detection logic output mode that uses INT pin (pin 7) as a proximity detection logic high / low output (register: PS_MS). When this mode is selected, the PS output (pin 7; INT/P_{out}) is pulled low when an object is closing to be detected and returned to level high when the object moves away. Register: PS_THDH / PS_THDL defines how sensitive PS detection is.

One thing to be stated is that whenever proximity detection logic mode applied, INT pin is only used as a logic high / low output. If host would like to use ALS with INT function, register: PS_MS has to be selected to normal operation mode (PS_MS = 0). Meanwhile, host has to simulate the GPIO pin as an INT pin function. If not, host needs to periodically reading the state of INT at this GPIO pin.

PROXIMITY DETECTION HYSTERESIS

A PS detection hysteresis is important that keeps PS state in a certain range of detection distance. For example, PS INT asserts when PS value over PS_THDH. Host switches off panel backlight and then clears INT. When PS value is less than PS_THDL, host switches on panel backlight. Any PS value lower than PS_THDH or higher than PS_THDL, PS INT will not be asserted. Host does keep the same state.

GESTURE FEATURE WITH VCNL4035X01

VCNL4035X01 allows to connect up to 3 external IREDs. Each may be selected separate to allow for normal proximity.

If one select e.g. IRED2 then also PS2 delivers the corresponding proximity data. To allow for a convenient gesture handling using all three external IREDs the GESTURE_MODE may be activated (set to “1”).

Within “PS_FORCE_MODE” all three IREDs will be sequentially switched and available proximity result of this directly shown within the three PS_DATA register.

Beside GESTURE_MODE enabled and PS_FORCE_MODE set this sequence starts direct after setting the PS_TRIG bit. Availability of the data will be indicated with setting the GESTURE_DATA_READY flag or also the Interrupt if this is set-up also. Please see below diagram.

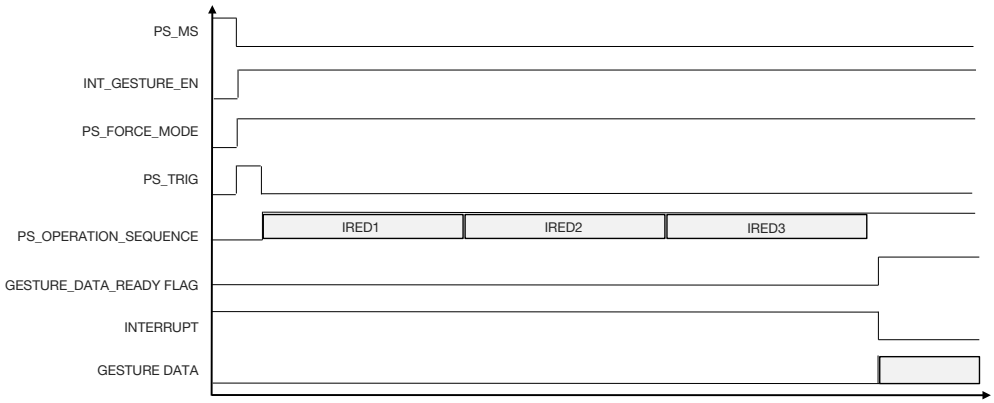

Fig. 11 - VCNL4035X01 Gesture Mode Sequence

For technical questions, contact: sensorstechsupport@vishay.com
THIS DOCUMENT IS SUBJECT TO CHANGE WITHOUT NOTICE. THE PRODUCTS DESCRIBED HEREIN AND THIS DOCUMENT ARE SUBJECT TO SPECIFIC DISCLAIMERS, SET FORTH AT www.vishay.com/doc?91000

APPLICATION CIRCUIT BLOCK REFERENCE

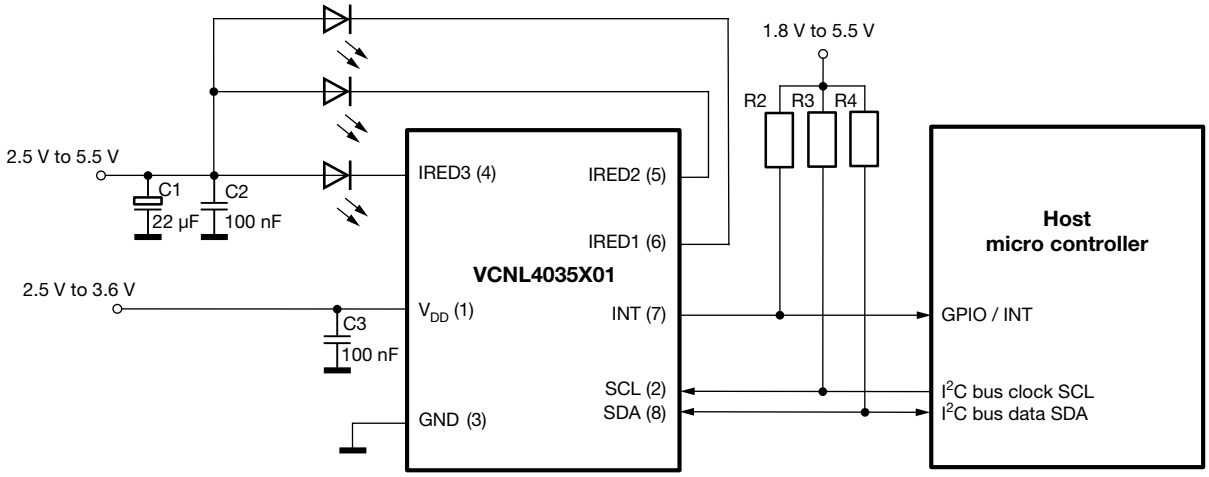

Fig. 12 - Circuitry with Two Separate Power Supply Sources

Three additional capacitors in the circuit are proposed for the following purposes: (1) the 100 nF capacitor near the V_{DD} pin is used for power supply noise rejection, (2) the 22 µF plus parallel 100 nF capacitors - connected to the common anode of the external IREDs / LEDs - are used to prevent the IRED voltage from instantly dropping when an IRED is switched on, and (3) 2.2 kΩ to 4.7 kΩ are recommended values for the pull up resistor of I^2C. The value of the pull-up resistor at the INT line could be 10 kΩ applied on the INT pin.

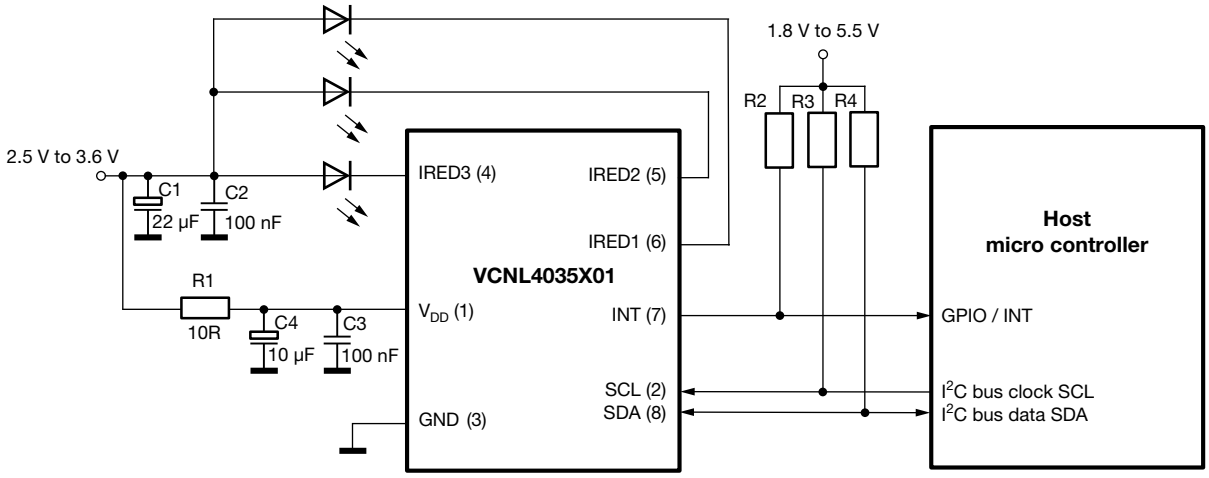

Fig. 13 - Circuitry with just One Common Power Supply Source

For high currents of the IREDs and / or power supply close to the lower limit of 2.5 V this R-C decoupling will prevent that the V_{DD} voltage drop below specified minimum.

The IREDs should come with a peak wavelength between 850 nm and 940 nm to fit to the sensitivity of the proximity photodiode.

Mechanical placement of the external IRED depends on the application. Please study also the AN: designing VCNL4035X01 into an application

For technical questions, contact: sensorstechsupport@vishay.com
THIS DOCUMENT IS SUBJECT TO CHANGE WITHOUT NOTICE. THE PRODUCTS DESCRIBED HEREIN AND THIS DOCUMENT ARE SUBJECT TO SPECIFIC DISCLAIMERS, SET FORTH AT www.vishay.com/doc?91000

PACKAGE DIMENSIONS in millimeters

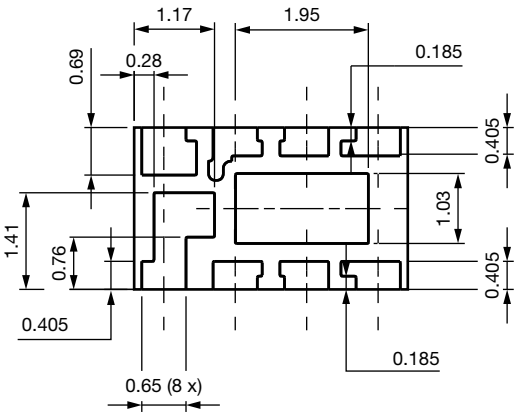

Pinning bottom view

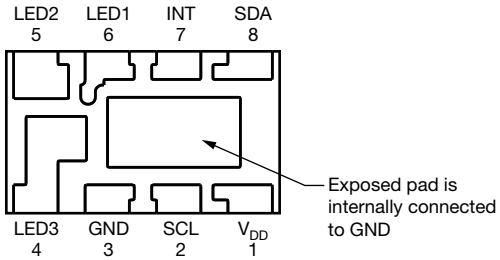

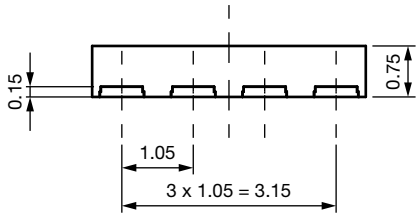

Pinning top view

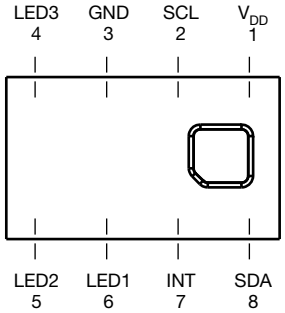

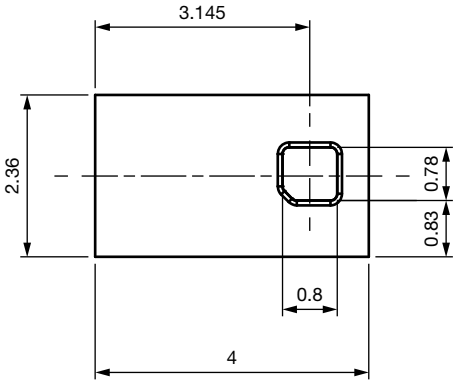

Recommended solder foot print

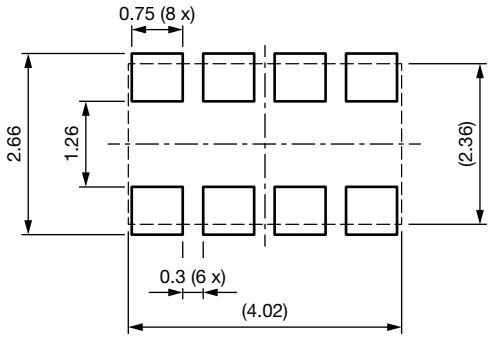

Drawing No.: 6.550-5331.01-4
Issue: 1; 21.02.2017

Not indicated tolerances ± 0.1 mm

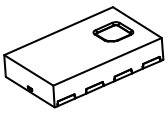

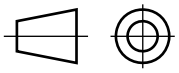

Technical drawings according to DIN specification.

For technical questions, contact: sensorstechsupport@vishay.com
THIS DOCUMENT IS SUBJECT TO CHANGE WITHOUT NOTICE. THE PRODUCTS DESCRIBED HEREIN AND THIS DOCUMENT ARE SUBJECT TO SPECIFIC DISCLAIMERS, SET FORTH AT www.vishay.com/doc?91000

TAPE AND REEL DIMENSIONS in millimeters

Reel-Size:
GS 08: Ø 180 mm ± 2 mm = 1800 pieces
GS 18: Ø 330 mm ± 2 mm = 7000 pieces
reel-design is representative for different types

Tape- and Reel Dimensions:
non tolerated dimensions ± 0.1 mm

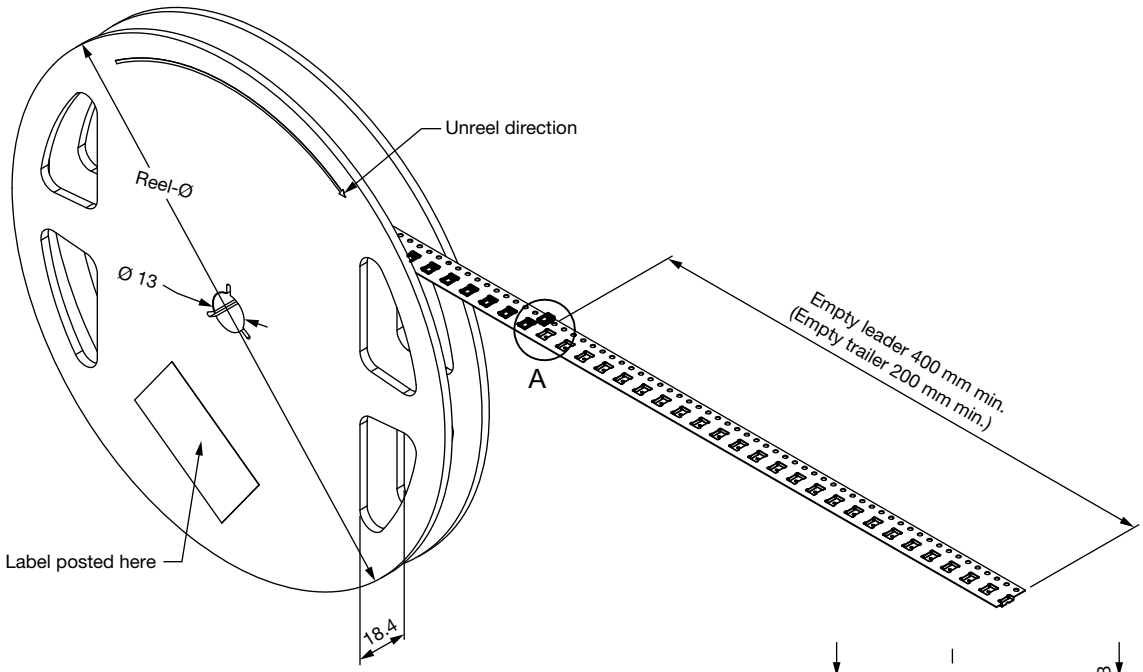

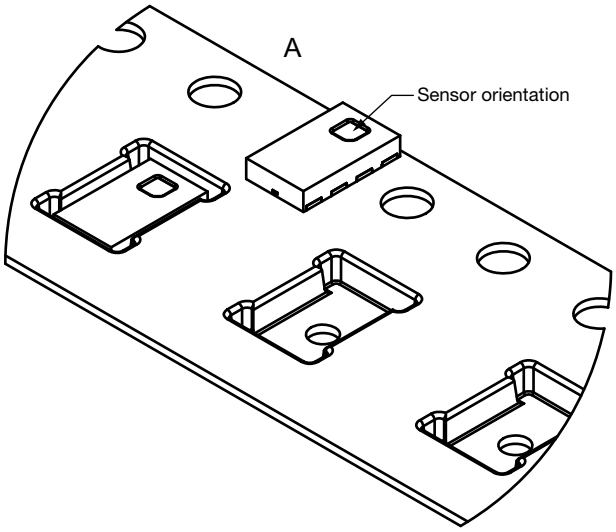

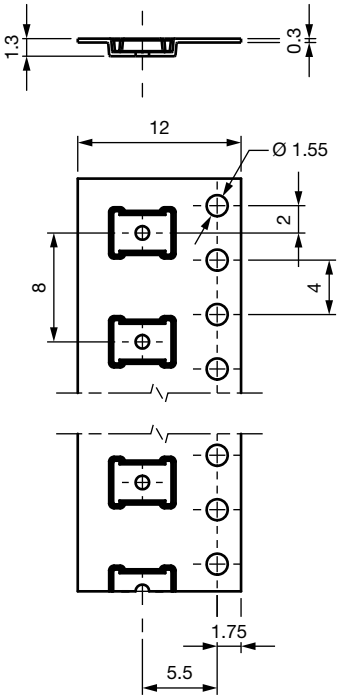

Drawing No.: 9.800-5128.02-4
Issue: 1; 21.02.2017

For technical questions, contact: sensorstechsupport@vishay.com
THIS DOCUMENT IS SUBJECT TO CHANGE WITHOUT NOTICE. THE PRODUCTS DESCRIBED HEREIN AND THIS DOCUMENT ARE SUBJECT TO SPECIFIC DISCLAIMERS, SET FORTH AT www.vishay.com/doc?91000

SOLDER PROFILE

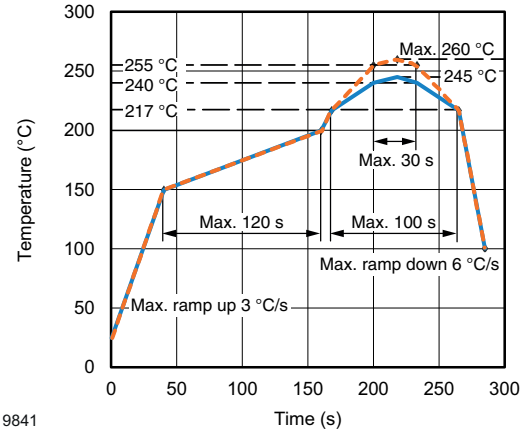

Fig. 14 - Lead (Pb)-free Reflow Solder Profile according to J-STD-020

DRYPACK

Devices are packed in moisture barrier bags (MBB) to prevent the products from moisture absorption during transportation and storage. Each bag contains a desiccant.

FLOOR LIFE

Floor life (time between soldering and removing from MBB) must not exceed the time indicated on MBB label:

Floor life: 168 h

Conditions: T_{amb} < 30 °C, RH < 60 %

Moisture sensitivity level 3, according to J-STD-020.

DRYING

In case of moisture absorption devices should be baked before soldering. Conditions see J-STD-020 or label. Devices taped on reel dry using recommended conditions 192 h at 40 °C (+ 5 °C), RH < 5 %.

For technical questions, contact: sensorstechsupport@vishay.com
THIS DOCUMENT IS SUBJECT TO CHANGE WITHOUT NOTICE. THE PRODUCTS DESCRIBED HEREIN AND THIS DOCUMENT ARE SUBJECT TO SPECIFIC DISCLAIMERS, SET FORTH AT www.vishay.com/doc?91000

Disclaimer

ALL PRODUCT, PRODUCT SPECIFICATIONS AND DATA ARE SUBJECT TO CHANGE WITHOUT NOTICE TO IMPROVE RELIABILITY, FUNCTION OR DESIGN OR OTHERWISE.

Vishay Intertechnology, Inc., its affiliates, agents, and employees, and all persons acting on its or their behalf (collectively, “Vishay”), disclaim any and all liability for any errors, inaccuracies or incompleteness contained in any datasheet or in any other disclosure relating to any product.

Vishay makes no warranty, representation or guarantee regarding the suitability of the products for any particular purpose or the continuing production of any product. To the maximum extent permitted by applicable law, Vishay disclaims (i) any and all liability arising out of the application or use of any product, (ii) any and all liability, including without limitation special, consequential or incidental damages, and (iii) any and all implied warranties, including warranties of fitness for particular purpose, non-infringement and merchantability.

Statements regarding the suitability of products for certain types of applications are based on Vishay's knowledge of typical requirements that are often placed on Vishay products in generic applications. Such statements are not binding statements about the suitability of products for a particular application. It is the customer's responsibility to validate that a particular product with the properties described in the product specification is suitable for use in a particular application. Parameters provided in datasheets and / or specifications may vary in different applications and performance may vary over time. All operating parameters, including typical parameters, must be validated for each customer application by the customer's technical experts. Product specifications do not expand or otherwise modify Vishay's terms and conditions of purchase, including but not limited to the warranty expressed therein.

Hyperlinks included in this datasheet may direct users to third-party websites. These links are provided as a convenience and for informational purposes only. Inclusion of these hyperlinks does not constitute an endorsement or an approval by Vishay of any of the products, services or opinions of the corporation, organization or individual associated with the third-party website. Vishay disclaims any and all liability and bears no responsibility for the accuracy, legality or content of the third-party website or for that of subsequent links.

Except as expressly indicated in writing, Vishay products are not designed for use in medical, life-saving, or life-sustaining applications or for any other application in which the failure of the Vishay product could result in personal injury or death. Customers using or selling Vishay products not expressly indicated for use in such applications do so at their own risk. Please contact authorized Vishay personnel to obtain written terms and conditions regarding products designed for such applications.

No license, express or implied, by estoppel or otherwise, to any intellectual property rights is granted by this document or by any conduct of Vishay. Product names and markings noted herein may be trademarks of their respective owners.

© 2024 VISHAY INTERTECHNOLOGY, INC. ALL RIGHTS RESERVED