Phase Control Thyristors (Stud Version), 110 A

TO-94 (TO-209AC)

FEATURES

- High current and high surge ratings
- Hermetic ceramic housing
- Designed and qualified for industrial level
- Material categorization: for definitions of compliance please see www.vishay.com/doc?99912

RoHS COMPLIANT

TYPICAL APPLICATIONS

- DC motor controls
- Controlled DC power supplies
- AC controllers

PRIMARY CHARACTERISTICS	
$I_{T(AV)}$	110 A
V_{DRM}/V_{RRM}	400 V, 800 V, 1200 V
V_{TM}	1.57 V
I_{GT}	80 mA
T_J	-40 °C to +140 °C
Package	TO-94 (TO-209AC)
Circuit configuration	Single SCR

MAJOR RATINGS AND CHARACTERISTICS			
PARAMETER	TEST CONDITIONS	VALUES	UNITS
$I_{T(AV)}$		110	A
	T_C	90	°C
$I_{T(RMS)}$		172	A
I_{TSM}	50 Hz	2080	A
	60 Hz	2180	A
I^2t	50 Hz	21.7	kA^2s
	60 Hz	19.8	kA^2s
V_{DRM}/V_{RRM}		400 to 1200	V
t_q	Typical	110	µs
T_J		-40 to +140	°C

ELECTRICAL SPECIFICATIONS

VOLTAGE RATINGS				
TYPE NUMBER	VOLTAGE CODE	V_{DRM}/V_{RRM}, MAXIMUM REPETITIVE PEAK AND OFF-STATE VOLTAGE V	V_{RSM}, MAXIMUM NON-REPETITIVE PEAK VOLTAGE V	I_{DRM}/I_{RRM} MAXIMUM AT $T_J = T_J$ MAXIMUM mA
VS-110RKI VS-111RKI	40	400	500	20
	80	800	900	
	120	1200	1300	

For technical questions within your region: DiodesAmericas@vishay.com, DiodesAsia@vishay.com, DiodesEurope@vishay.com
THIS DOCUMENT IS SUBJECT TO CHANGE WITHOUT NOTICE. THE PRODUCTS DESCRIBED HEREIN AND THIS DOCUMENT ARE SUBJECT TO SPECIFIC DISCLAIMERS, SET FORTH AT www.vishay.com/doc?91000

ABSOLUTE MAXIMUM RATINGS						
PARAMETER	SYMBOL	TEST CONDITIONS			VALUES	UNITS
Maximum average on-state current at case temperature	$I_{T(AV)}$	180° conduction, half sine wave			110	A
					90	°C
Maximum RMS on-state current	$I_{T(RMS)}$	DC at 83 °C case temperature			172	A
Maximum peak, one-cycle non-repetitive surge current	I_{TSM}	t = 10 ms	No voltage reapplied	Sinusoidal half wave, initial $T_J = T_J$ maximum	2080	
		t = 8.3 ms			2180	
		t = 10 ms	100 % V_{RRM} reapplied		1750	
		t = 8.3 ms			1830	
Maximum I^2t for fusing	I^2t	t = 10 ms	No voltage reapplied		21.7	kA^2s
		t = 8.3 ms			19.8	
		t = 10 ms	100 % V_{RRM} reapplied		15.3	
		t = 8.3 ms			14.0	
Maximum $I^2\sqrt{t}$ for fusing	$I^2\sqrt{t}$	t = 0.1 ms to 10 ms, no voltage reapplied			217	$kA^2\sqrt{s}$
Low level value of threshold voltage	$V_{T(TO)1}$	(16.7 % x π x $I_{T(AV)}$ < I < π x $I_{T(AV)}$), $T_J = T_J$ maximum			0.82	V
High level value of threshold voltage	$V_{T(TO)2}$	(I > π x $I_{T(AV)}$), $T_J = T_J$ maximum			1.02	
Low level value of on-state slope resistance	r_{t1}	(16.7 % x π x $I_{T(AV)}$ < I < π x $I_{T(AV)}$), $T_J = T_J$ maximum			2.16	mΩ
High level value of on-state slope resistance	r_{t2}	(I > π x $I_{T(AV)}$), $T_J = T_J$ maximum			1.70	
Maximum on-state voltage	V_{TM}	I_{pk} = 350 A, $T_J = T_J$ maximum, t_p = 10 ms sine pulse			1.57	V
Maximum holding current	I_H	T_J = 25 °C, anode supply 6 V resistive load			200	mA
Typical latching current	I_L				400	

SWITCHING				
PARAMETER	SYMBOL	TEST CONDITIONS	VALUES	UNITS
Maximum non-repetitive rate of rise of turned-on current	dI/dt	Gate drive 20 V, 20 Ω, $t_r \leq 1$ µs $T_J = T_J$ maximum, anode voltage ≤ 80 % V_{DRM}	300	A/µs
Typical delay time	t_d	Gate current 1 A, dI_g/dt = 1 A/µs V_d = 0.67 % V_{DRM}, T_J = 25 °C	1	µs
Typical turn-off time	t_q	I_{TM} = 50 A, $T_J = T_J$ maximum, dI/dt = - 5 A/µs V_R = 50 V, dV/dt = 20 V/µs, gate 0 V 25 Ω	110	

BLOCKING				
PARAMETER	SYMBOL	TEST CONDITIONS	VALUES	UNITS
Maximum critical rate of rise of off-state voltage	dV/dt	$T_J = T_J$ maximum linear to 80 % rated V_{DRM}	500	V/µs
Maximum peak reverse and off-state leakage current	I_{RRM}, I_{DRM}	$T_J = T_J$ maximum rated V_{DRM}/V_{RRM} applied	20	mA

For technical questions within your region: DiodesAmericas@vishay.com, DiodesAsia@vishay.com, DiodesEurope@vishay.com
THIS DOCUMENT IS SUBJECT TO CHANGE WITHOUT NOTICE. THE PRODUCTS DESCRIBED HEREIN AND THIS DOCUMENT ARE SUBJECT TO SPECIFIC DISCLAIMERS, SET FORTH AT www.vishay.com/doc?91000

TRIGGERING						
PARAMETER	SYMBOL	TEST CONDITIONS		VALUES		UNITS
				TYP.	MAX.	
Maximum peak gate power	P_{GM}	$T_J = T_J$ maximum, $t_p \leq 5$ ms		12		W
Maximum average gate power	$P_{G(AV)}$	$T_J = T_J$ maximum, f = 50 Hz, d% = 50		3.0		
Maximum peak positive gate current	I_{GM}	$T_J = T_J$ maximum, $t_p \leq 5$ ms		3.0		A
Maximum peak positive gate voltage	$+ V_{GM}$			20		V
Maximum peak negative gate voltage	$- V_{GM}$			10		
DC gate current required to trigger	I_{GT}	$T_J = -40$ °C	Maximum required gate trigger/current/voltage are the lowest value which will trigger all units 12 V anode to cathode applied	180	-	mA
		$T_J = 25$ °C		80	120	
		$T_J = 140$ °C		40	-	
DC gate voltage required to trigger	V_{GT}	$T_J = -40$ °C		2.5	-	V
		$T_J = 25$ °C		1.6	2	
		$T_J = 140$ °C		1	-	
DC gate current not to trigger	I_{GD}	$T_J = T_J$ maximum	Maximum gate current/ voltage not to trigger is the maximum value which will not trigger any unit with rated V_{DRM} anode to cathode applied	6.0		mA
DC gate voltage not to trigger	V_{GD}			0.25		V

THERMAL AND MECHANICAL SPECIFICATIONS				
PARAMETER	SYMBOL	TEST CONDITIONS	VALUES	UNITS
Maximum operating junction temperature range	T_J		-40 to +140	°C
Maximum storage temperature range	T_{Stg}		-40 to +150	
Maximum thermal resistance, junction to case	R_{thJC}	DC operation	0.27	K/W
Maximum thermal resistance, case to heatsink	R_{thCS}	Mounting surface, smooth, flat and greased	0.1	
Mounting torque, ± 10 %		Non-lubricated threads	15.5 (137)	N · m (lbf · in)
		Lubricated threads	14 (120)	
Approximate weight			130	g
Case style		See dimensions - link at the end of datasheet	TO-94 (TO-209AC)	

ΔR_{thJC} CONDUCTION				
CONDUCTION ANGLE	SINUSOIDAL CONDUCTION	RECTANGULAR CONDUCTION	TEST CONDITIONS	UNITS
180°	0.043	0.031	$T_J = T_J$ maximum	K/W
120°	0.052	0.053		
90°	0.066	0.071		
60°	0.096	0.101		
30°	0.167	0.169		

Note

- The table above shows the increment of thermal resistance R_{thJC} when devices operate at different conduction angles than DC

For technical questions within your region: DiodesAmericas@vishay.com, DiodesAsia@vishay.com, DiodesEurope@vishay.com
THIS DOCUMENT IS SUBJECT TO CHANGE WITHOUT NOTICE. THE PRODUCTS DESCRIBED HEREIN AND THIS DOCUMENT ARE SUBJECT TO SPECIFIC DISCLAIMERS, SET FORTH AT www.vishay.com/doc?91000

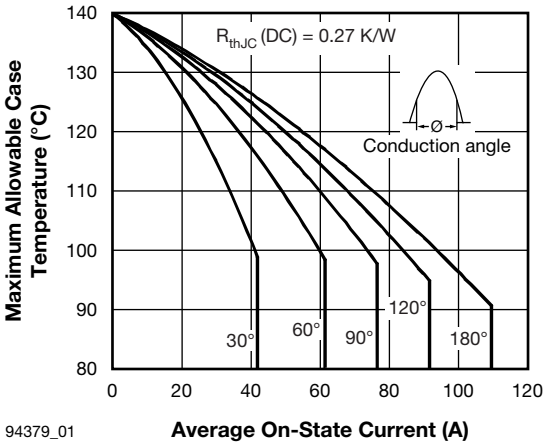

Fig. 1 - Current Ratings Characteristics

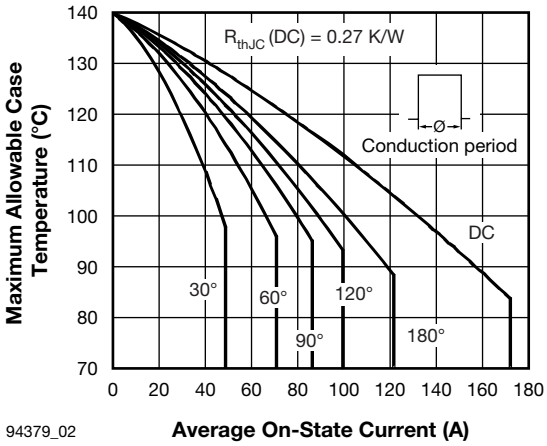

Fig. 2 - Current Ratings Characteristics

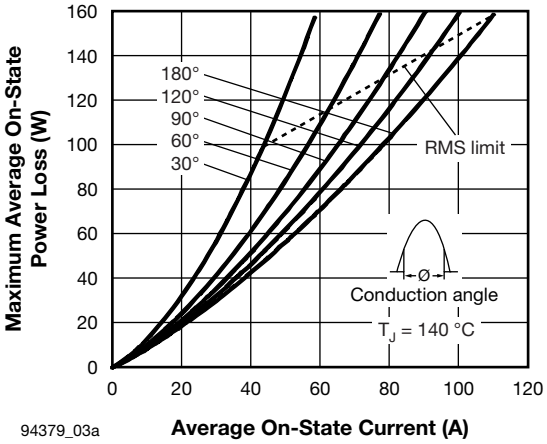

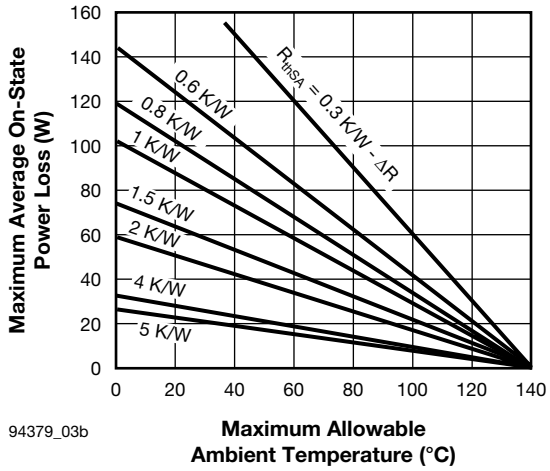

Fig. 3 - On-State Power Loss Characteristics

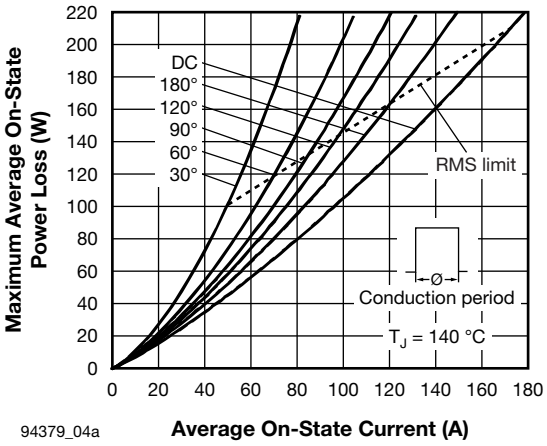

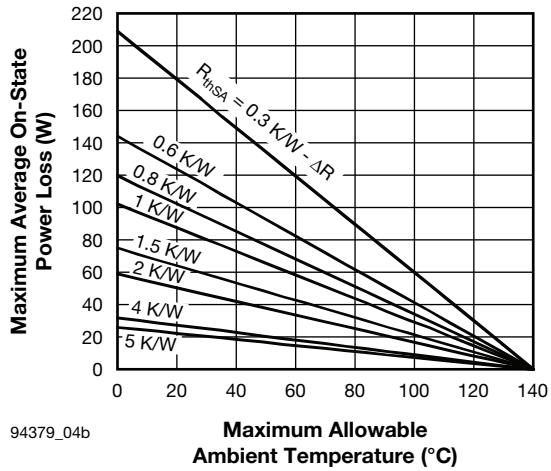

Fig. 4 - On-State Power Loss Characteristics

For technical questions within your region: DiodesAmericas@vishay.com, DiodesAsia@vishay.com, DiodesEurope@vishay.com
THIS DOCUMENT IS SUBJECT TO CHANGE WITHOUT NOTICE. THE PRODUCTS DESCRIBED HEREIN AND THIS DOCUMENT ARE SUBJECT TO SPECIFIC DISCLAIMERS, SET FORTH AT www.vishay.com/doc?91000

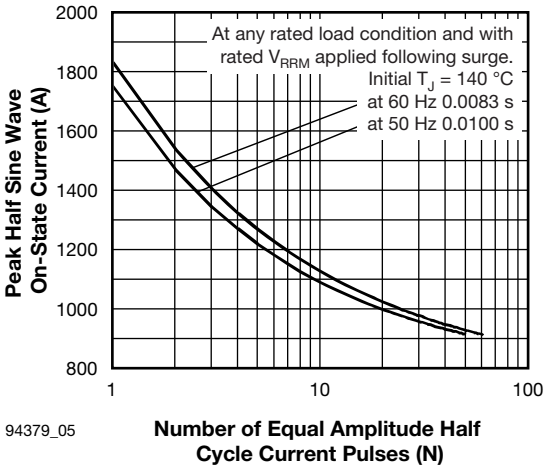

Fig. 5 - Maximum Non-Repetitive Surge Current

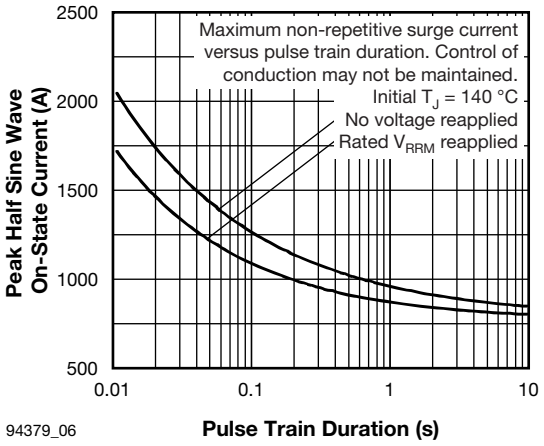

Fig. 6 - Maximum Non-Repetitive Surge Current

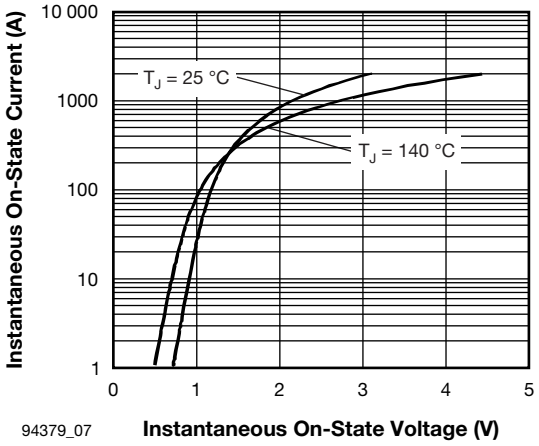

Fig. 7 - On-State Voltage Drop Characteristics

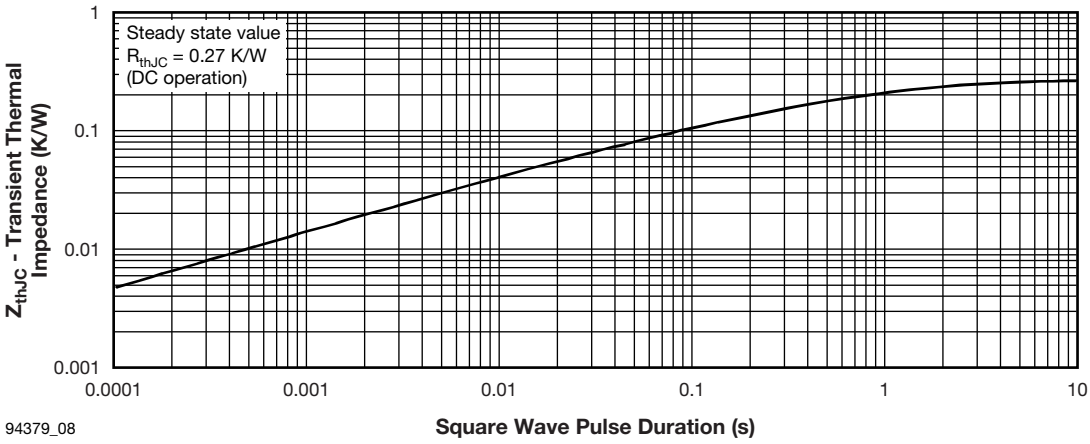

Fig. 8 - Thermal Impedance Z_{thJC} Characteristic

For technical questions within your region: DiodesAmericas@vishay.com, DiodesAsia@vishay.com, DiodesEurope@vishay.com
THIS DOCUMENT IS SUBJECT TO CHANGE WITHOUT NOTICE. THE PRODUCTS DESCRIBED HEREIN AND THIS DOCUMENT ARE SUBJECT TO SPECIFIC DISCLAIMERS, SET FORTH AT www.vishay.com/doc?91000

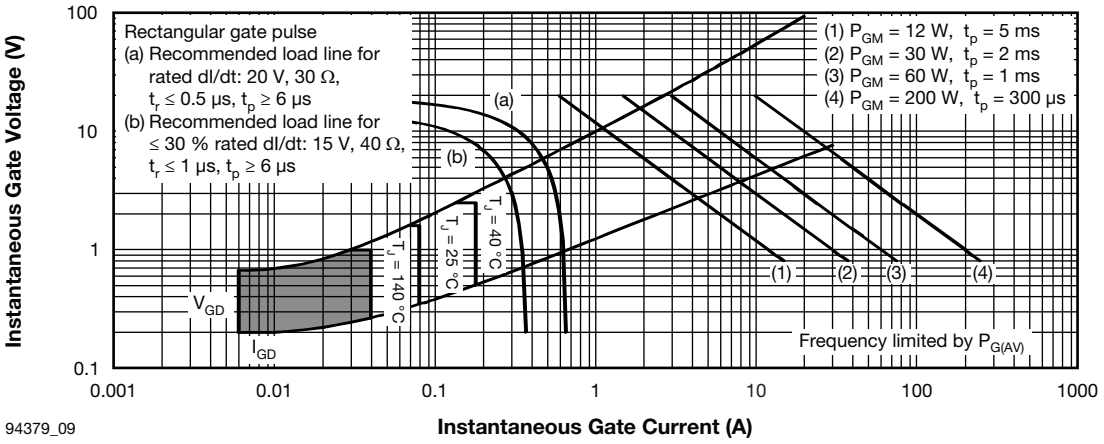

Fig. 9 - Gate Characteristics

ORDERING INFORMATION TABLE

Device code

VS-	11	0	RKI	120	M	PbF
1	2	3	4	5	6	7

1 - Vishay Semiconductors product

2 - $I_{T(AV)}$ rated average output current (rounded/10)

3 -
- 0 = eyelet terminals (gate and auxiliary cathode leads)
- 1 = fast-on terminals (gate and auxiliary cathode leads)

4 - Thyristor

5 - Voltage code x 10 = V_{RRM} (see Voltage Ratings table)

6 -
- None = stud base1/2"-20UNF-2A threads
- M = stud base metric threads M12 x 1.75 E 6

7 -
- None = standard production
- PbF = lead (Pb)-free

LINKS TO RELATED DOCUMENTS	
Dimensions	www.vishay.com/doc?95003

For technical questions within your region: DiodesAmericas@vishay.com, DiodesAsia@vishay.com, DiodesEurope@vishay.com
THIS DOCUMENT IS SUBJECT TO CHANGE WITHOUT NOTICE. THE PRODUCTS DESCRIBED HEREIN AND THIS DOCUMENT ARE SUBJECT TO SPECIFIC DISCLAIMERS, SET FORTH AT www.vishay.com/doc?91000

TO-209AC (TO-94) for 110RKI and 111RKI Series

DIMENSIONS in millimeters (inches)

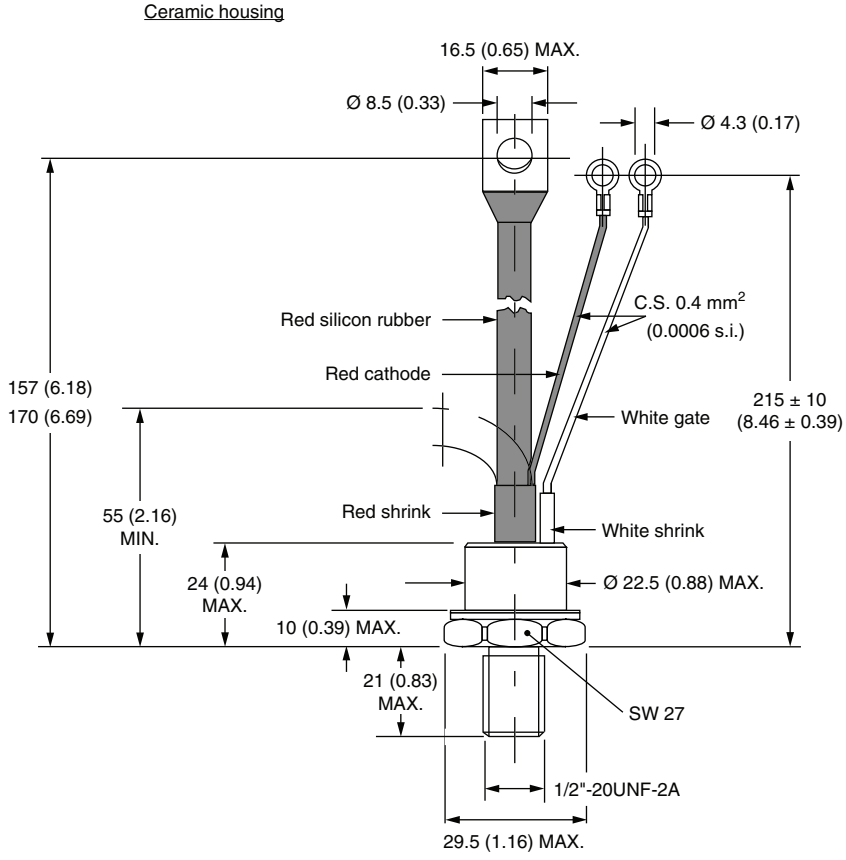

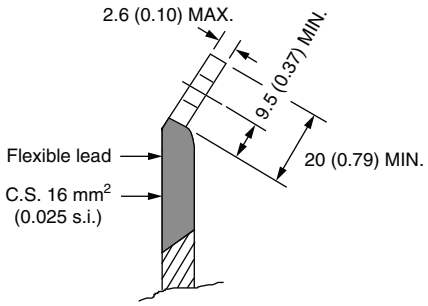

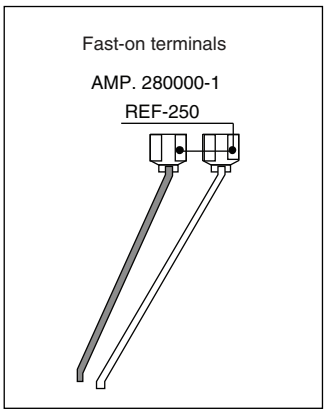

Note

- For metric device: M12 x 1.75 contact factory

Disclaimer

ALL PRODUCT, PRODUCT SPECIFICATIONS AND DATA ARE SUBJECT TO CHANGE WITHOUT NOTICE TO IMPROVE RELIABILITY, FUNCTION OR DESIGN OR OTHERWISE.

Vishay Intertechnology, Inc., its affiliates, agents, and employees, and all persons acting on its or their behalf (collectively, “Vishay”), disclaim any and all liability for any errors, inaccuracies or incompleteness contained in any datasheet or in any other disclosure relating to any product.

Vishay makes no warranty, representation or guarantee regarding the suitability of the products for any particular purpose or the continuing production of any product. To the maximum extent permitted by applicable law, Vishay disclaims (i) any and all liability arising out of the application or use of any product, (ii) any and all liability, including without limitation special, consequential or incidental damages, and (iii) any and all implied warranties, including warranties of fitness for particular purpose, non-infringement and merchantability.

Statements regarding the suitability of products for certain types of applications are based on Vishay's knowledge of typical requirements that are often placed on Vishay products in generic applications. Such statements are not binding statements about the suitability of products for a particular application. It is the customer's responsibility to validate that a particular product with the properties described in the product specification is suitable for use in a particular application. Parameters provided in datasheets and / or specifications may vary in different applications and performance may vary over time. All operating parameters, including typical parameters, must be validated for each customer application by the customer's technical experts. Product specifications do not expand or otherwise modify Vishay's terms and conditions of purchase, including but not limited to the warranty expressed therein.

Hyperlinks included in this datasheet may direct users to third-party websites. These links are provided as a convenience and for informational purposes only. Inclusion of these hyperlinks does not constitute an endorsement or an approval by Vishay of any of the products, services or opinions of the corporation, organization or individual associated with the third-party website. Vishay disclaims any and all liability and bears no responsibility for the accuracy, legality or content of the third-party website or for that of subsequent links.

Except as expressly indicated in writing, Vishay products are not designed for use in medical, life-saving, or life-sustaining applications or for any other application in which the failure of the Vishay product could result in personal injury or death. Customers using or selling Vishay products not expressly indicated for use in such applications do so at their own risk. Please contact authorized Vishay personnel to obtain written terms and conditions regarding products designed for such applications.

No license, express or implied, by estoppel or otherwise, to any intellectual property rights is granted by this document or by any conduct of Vishay. Product names and markings noted herein may be trademarks of their respective owners.

© 2024 VISHAY INTERTECHNOLOGY, INC. ALL RIGHTS RESERVED