DC Power Electronic Capacitors (PEC) - Rectangular in Plastic Casing

FEATURES

- High impulse current rating
- Low inductance
- High reliability and lifetime expectation
- Resistance to heavy-duty shock vibration
- Non-polar dielectric
- Dry resin filled
- Weight reducing flame retardant plastic case (UL 94 V-0)
- Made for busbar connection

APPLICATIONS

- DC link capacitors
- Static converters for transportation
  - Heavy-haul locomotives
  - Light local trains
  - Trolley buses
  - Trams / streetcars
- Industrial converters
- DC supply equipment
- High voltage testing systems
- Impulse discharge energy
- Harmonic filtering

LINKS TO ADDITIONAL RESOURCES

3D Models

Infographics

QUICK REFERENCE DATA	
DESCRIPTION	**VALUE**
Rated DC voltage min.	450 V_{DC}
Rated DC voltage max.	3800 V_{DC}
Capacitance min.	110 µF
Capacitance max.	8000 µF
Capacitance tolerance	± 10 %
Technology	Metallized polypropylene film, self-healing
Dielectric dissipation factor	< 2 x 10^{-4}
Operating temperature min.	-40 °C
Operating temperature max.	+85 °C (hotspot)
Inductance	Up to < 25 nH
Lifetime expectancy	> 100 000 h at U_N and < 70 °C hotspot
Reliability	< 200 FIT
Test voltage	U_{tt} = 1.5 x U_N/10 s; U_{tc} = 2 x U_i + 1000 V_{AC}/10 s
Casing	Plastic case UL 94 V-0
Filling	Dry resin
Standard	IEC 61071, IEC 61881-1
Maximum torque	M8 = 10 Nm M6 = 6 Nm
Product description	LNK xxx/yyy/za/w xxx = voltage; till 999 V in Volt, from 1000 V in kV yyy = C-value; till 999 µF in µF, from 1000 µ in mF z = case form a = terminals; B = bolt, I = female thread, F = busbar w = special version

For technical questions, contact: esta@vishay.com

THIS DOCUMENT IS SUBJECT TO CHANGE WITHOUT NOTICE. THE PRODUCTS DESCRIBED HEREIN AND THIS DOCUMENT ARE SUBJECT TO SPECIFIC DISCLAIMERS, SET FORTH AT www.vishay.com/doc?91000

TYPE DESCRIPTION														
TYPE	C (µF)	U (V_{DC})	L_S (nH)	R_S (mΩ)	R_{th} (K/W)	$I_{max.}$ (A) AT 1 kHz	Î (kA)	$Î_S$ (kA)	L (mm)	W [mm]	H [mm]	MOQ / PU	DRAWING NO.	ORDER CODE
LNK xxx/yyy/9B/w														
LNK 800/3.0/9B	3000	800	40	0.89	1.29	150	6.7	20.2	225	130	168	4 / 4	9	101164
LNK 1.0/1.59/9B	1590	1000	40	0.78	1.19	150	4.9	14.7	225	130	168	4 / 4	9	101165
LNK 1.1/1.33/9B	1330	1100	40	0.81	1.26	150	4.5	13.4	225	130	168	4 / 4	9	101166
LNK 1.2/1.14/9B	1140	1200	40	0.85	1.28	150	4.1	12.4	225	130	168	4 / 4	9	101167
LNK 1.4/850/9B	850	1400	40	0.93	1.34	140	3.6	10.7	225	130	168	4 / 4	9	101168
LNK 1.6/600/9B	600	1600	40	1.03	1.41	135	3.0	9.1	225	130	168	4 / 4	9	101169
LNK 1.8/480/9B	480	1800	40	1.12	1.42	125	2.7	8.1	225	130	168	4 / 4	9	101170
LNK 2.0/400/9B	400	2000	40	1.20	1.44	120	2.4	7.3	225	130	168	4 / 4	9	101171
LNK 2.2/330/9B	330	2200	40	1.22	1.54	125	2.2	6.7	225	130	168	4 / 4	9	101172
LNK 2.4/260/9B	260	2400	40	0.85	1.36	150	4.1	12.2	225	130	168	4 / 4	9	101173
LNK 2.7/195/9B	195	2700	40	0.88	1.42	150	3.6	10.8	225	130	168	4 / 4	9	101174
LNK 2.8/195/9B	195	2800	40	0.88	1.42	150	3.6	10.8	225	130	168	4 / 4	9	101175
LNK 3.2/135/9B	135	3200	40	1.05	1.42	130	3.0	9.0	225	130	168	4 / 4	9	101176
LNK 3.5/110/9B	110	3500	40	1.09	1.53	120	2.7	8.1	225	130	168	4 / 4	9	101177
LNK xxx/yyy/7I/w														
LNK 450/2.0/7I	2000	450	25	0.65	1.41	150	7.1	21.3	165	75	170	8 / 8	7	101178
LNK 600/1.45/7I	1450	600	25	0.69	1.38	150	6.1	18.2	165	75	170	8 / 8	7	101179
LNK 800/1.2/7I	1200	800	25	0.74	1.49	145	5.3	15.9	165	75	170	8 / 8	7	101180
LNK 1.1/775/7I	775	1100	25	0.84	1.54	130	4.3	12.8	165	75	170	8 / 8	7	101181
LNK 1.3/535/7I	535	1300	25	0.94	1.57	140	3.5	10.6	165	75	170	8 / 8	7	101182
LNK 1.65/330/7I	330	1650	25	1.09	1.64	110	2.8	8.5	165	75	170	8 / 8	7	101183
LNK 1.85/255/7I	255	1850	25	1.2	1.66	100	2.5	7.5	165	75	170	8 / 8	7	101184
LNK 2.0/220/7I	220	2000	25	1.24	1.63	100	2.4	7.1	165	75	170	8 / 8	7	101185
LNK 2.2/180/7I	180	2200	25	1.33	1.65	95	2.1	6.4	165	75	170	8 / 8	7	101186
LNK xxx/yyy/5F/w														
LNK 700/8.0/5F/w	8000	700	55	0.42	0.66	300	15.8	47.3	380	150	235	4 / 4	5	101459
LNK 900/5.0/5F/w	5000	900	55	0.49	0.76	300	12.1	36.4	380	150	235	4 / 4	5	101460
LNK 1.0/4.2/5F/w	4200	1000	55	0.53	0.75	250	11.3	33.9	380	150	235	4 / 4	5	101461
LNK 1.1/3.5/5F/w	3500	1100	55	0.45	0.75	250	12.0	35.9	380	150	235	4 / 4	5	101462
LNK 1.2/3.6/5F/w	3600	1200	55	0.56	0.74	230	10.7	32.0	380	150	235	4 / 4	5	101463
LNK 1.35/2.65/5F/w	2650	1350	55	0.65	0.79	220	8.5	25.5	380	150	235	4 / 4	5	101465
LNK 1.6/2.0/5F/w	2000	1600	55	0.68	0.75	200	8.2	24.7	380	150	235	4 / 4	5	101468
LNK 1.8/1.6/5F/w	1600	1800	55	0.75	0.76	200	7.2	21.7	380	150	235	4 / 4	5	101470
LNK 2.1/1.0/5F/w	1000	2100	55	0.68	0.80	200	6.6	19.9	380	150	235	4 / 4	5	101472
LNK 2.2/850/5F/w	850	2200	55	0.73	0.84	200	5.9	17.8	380	150	235	4 / 4	5	101473
LNK 2.7/650/5F/w	650	2700	55	0.59	0.74	220	9.7	29.2	380	150	235	4 / 4	5	101475
LNK 2.9/500/5F/w	500	2900	55	0.66	0.80	200	8.2	24.6	380	150	235	4 / 4	5	101476
LNK 3.2/500/5F/w	500	3200	55	0.66	0.75	200	8.4	25.3	380	150	235	4 / 4	5	101477
LNK 3.6/300/5F/w	300	3600	55	0.86	0.87	150	6.0	18.1	380	150	235	4 / 4	5	101479
LNK 3.8/300/5F/w	300	3800	55	0.82	0.82	160	6.4	19.2	380	150	235	4 / 4	5	101480

For technical questions, contact: esta@vishay.com
THIS DOCUMENT IS SUBJECT TO CHANGE WITHOUT NOTICE. THE PRODUCTS DESCRIBED HEREIN AND THIS DOCUMENT ARE SUBJECT TO SPECIFIC DISCLAIMERS, SET FORTH AT www.vishay.com/doc?91000

DIMENSIONS in millimeters

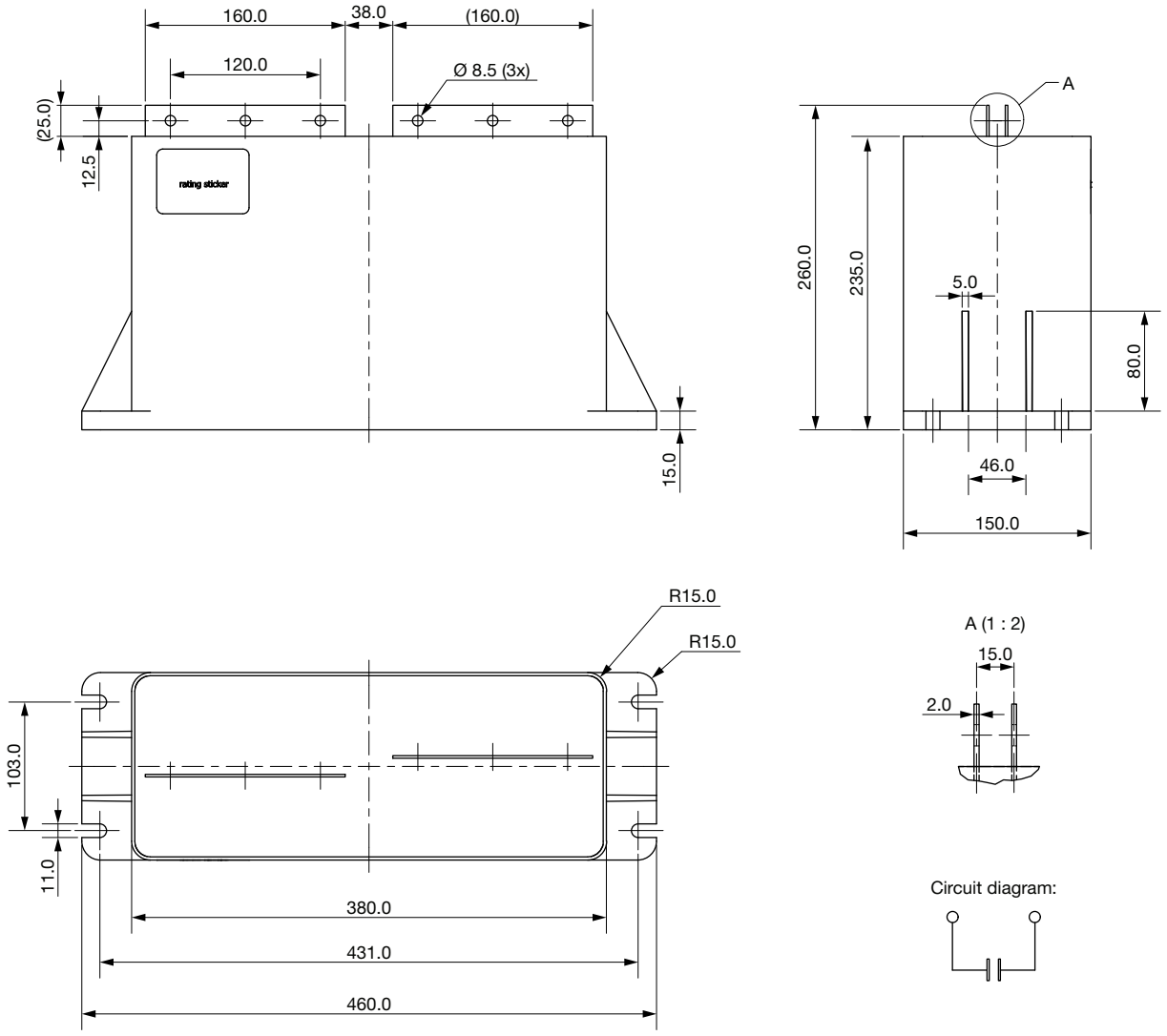

Drawing 5

For technical questions, contact: esta@vishay.com

THIS DOCUMENT IS SUBJECT TO CHANGE WITHOUT NOTICE. THE PRODUCTS DESCRIBED HEREIN AND THIS DOCUMENT ARE SUBJECT TO SPECIFIC DISCLAIMERS, SET FORTH AT www.vishay.com/doc?91000

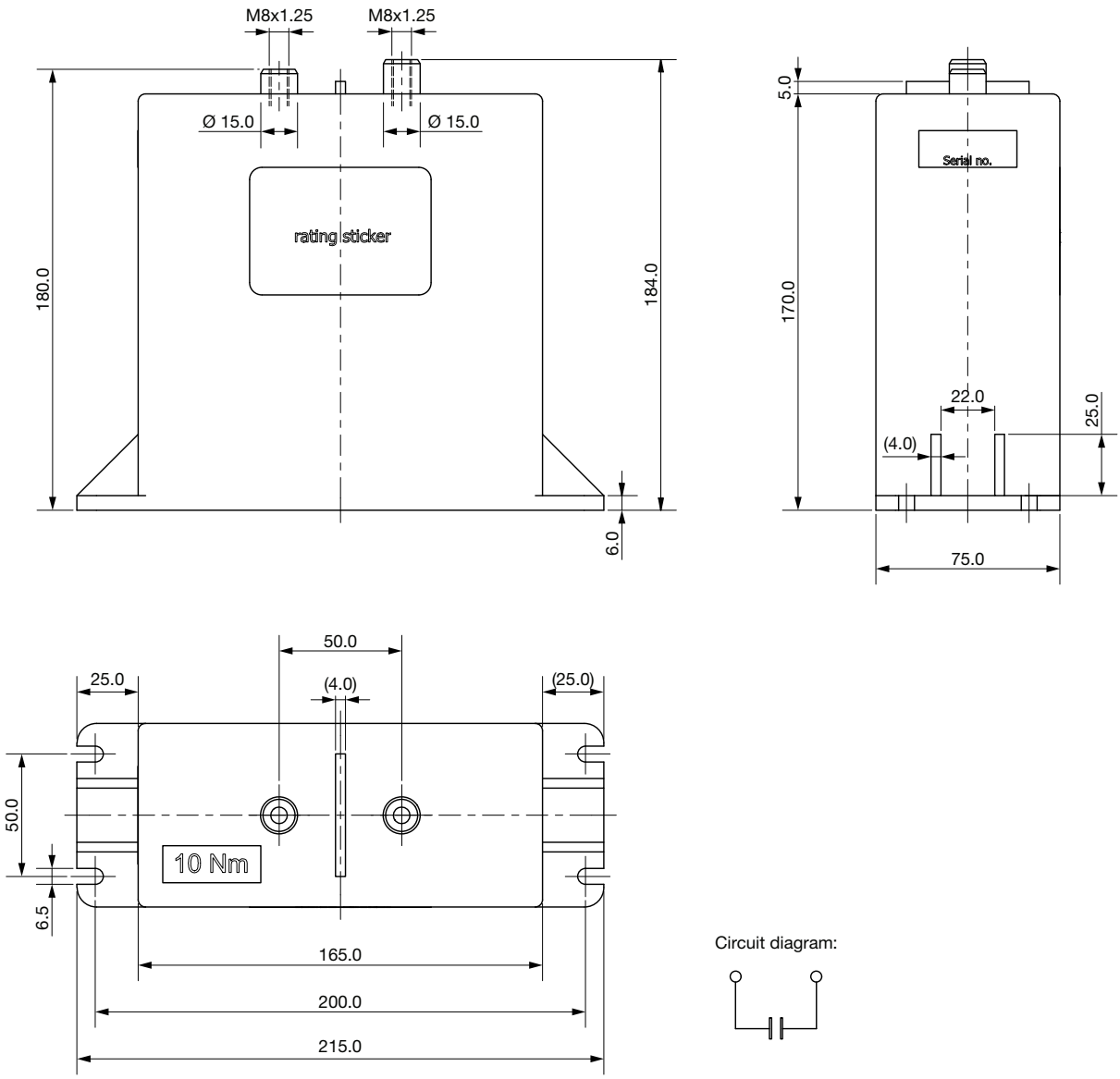

Drawing 7

For technical questions, contact: esta@vishay.com
THIS DOCUMENT IS SUBJECT TO CHANGE WITHOUT NOTICE. THE PRODUCTS DESCRIBED HEREIN AND THIS DOCUMENT ARE SUBJECT TO SPECIFIC DISCLAIMERS, SET FORTH AT www.vishay.com/doc?91000

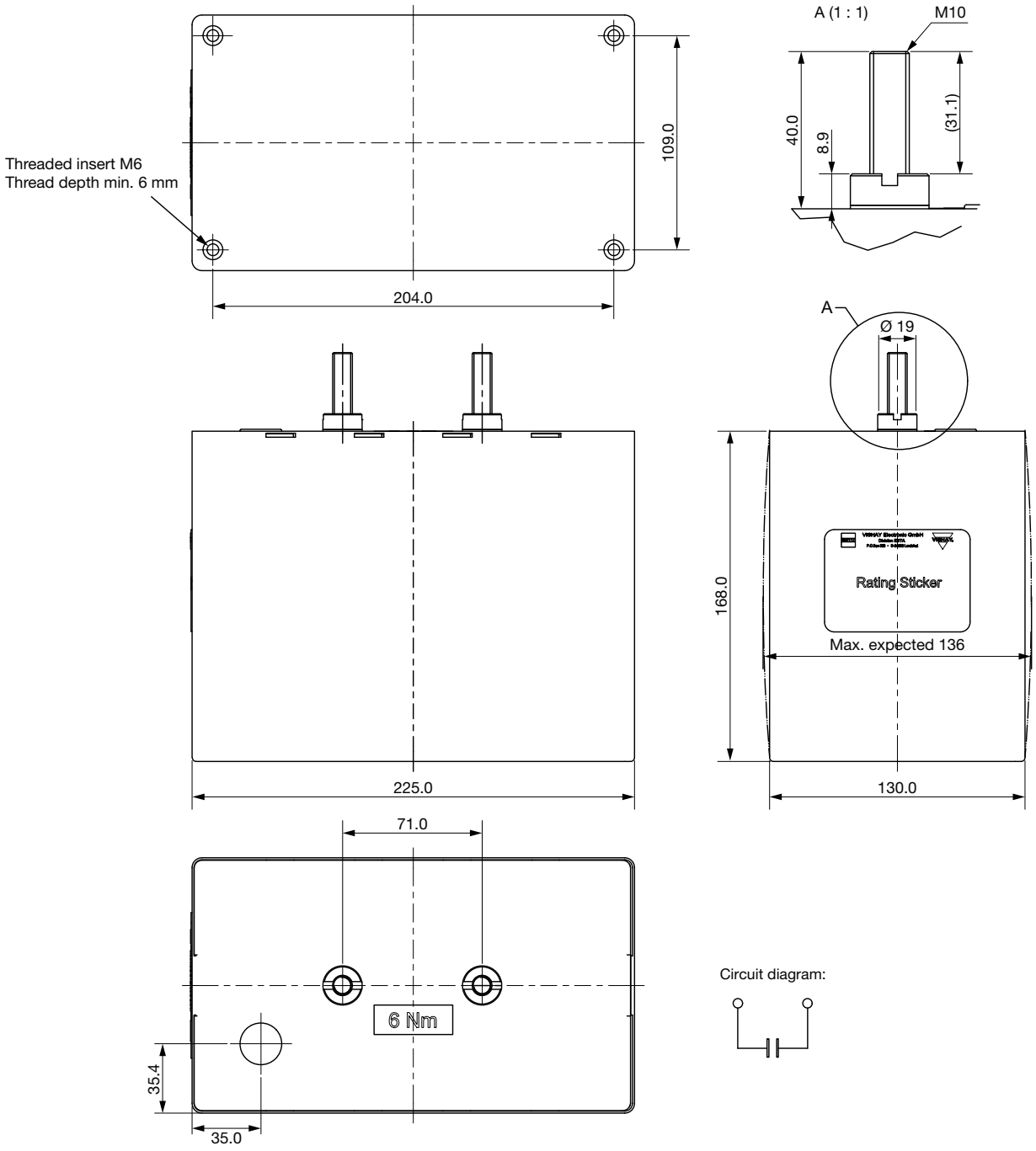

Drawing 9

Contact Us

Other voltage, current, and capacitance values are available on request without additional cost and lead time for the individual design.

THIS DOCUMENT IS SUBJECT TO CHANGE WITHOUT NOTICE. THE PRODUCTS DESCRIBED HEREIN AND THIS DOCUMENT ARE SUBJECT TO SPECIFIC DISCLAIMERS, SET FORTH AT www.vishay.com/doc?91000

Disclaimer

ALL PRODUCT, PRODUCT SPECIFICATIONS AND DATA ARE SUBJECT TO CHANGE WITHOUT NOTICE TO IMPROVE RELIABILITY, FUNCTION OR DESIGN OR OTHERWISE.

Vishay Intertechnology, Inc., its affiliates, agents, and employees, and all persons acting on its or their behalf (collectively, “Vishay”), disclaim any and all liability for any errors, inaccuracies or incompleteness contained in any datasheet or in any other disclosure relating to any product.

Vishay makes no warranty, representation or guarantee regarding the suitability of the products for any particular purpose or the continuing production of any product. To the maximum extent permitted by applicable law, Vishay disclaims (i) any and all liability arising out of the application or use of any product, (ii) any and all liability, including without limitation special, consequential or incidental damages, and (iii) any and all implied warranties, including warranties of fitness for particular purpose, non-infringement and merchantability.

Statements regarding the suitability of products for certain types of applications are based on Vishay's knowledge of typical requirements that are often placed on Vishay products in generic applications. Such statements are not binding statements about the suitability of products for a particular application. It is the customer's responsibility to validate that a particular product with the properties described in the product specification is suitable for use in a particular application. Parameters provided in datasheets and / or specifications may vary in different applications and performance may vary over time. All operating parameters, including typical parameters, must be validated for each customer application by the customer's technical experts. Product specifications do not expand or otherwise modify Vishay's terms and conditions of purchase, including but not limited to the warranty expressed therein.

Hyperlinks included in this datasheet may direct users to third-party websites. These links are provided as a convenience and for informational purposes only. Inclusion of these hyperlinks does not constitute an endorsement or an approval by Vishay of any of the products, services or opinions of the corporation, organization or individual associated with the third-party website. Vishay disclaims any and all liability and bears no responsibility for the accuracy, legality or content of the third-party website or for that of subsequent links.

Vishay products are not designed for use in life-saving or life-sustaining applications or any application in which the failure of the Vishay product could result in personal injury or death unless specifically qualified in writing by Vishay. Customers using or selling Vishay products not expressly indicated for use in such applications do so at their own risk. Please contact authorized Vishay personnel to obtain written terms and conditions regarding products designed for such applications.

No license, express or implied, by estoppel or otherwise, to any intellectual property rights is granted by this document or by any conduct of Vishay. Product names and markings noted herein may be trademarks of their respective owners.

© 2024 VISHAY INTERTECHNOLOGY, INC. ALL RIGHTS RESERVED

THIS DOCUMENT IS SUBJECT TO CHANGE WITHOUT NOTICE. THE PRODUCTS DESCRIBED HEREIN AND THIS DOCUMENT ARE SUBJECT TO SPECIFIC DISCLAIMERS, SET FORTH AT www.vishay.com/doc?91000