Single-Turn Continuous Rotation Analog Displacement Sensors

FEATURES

- Conductive plastic potentiometer technology, infinite resolution
- Servo mount anodized light alloy housing
- Precious metal contacts
- Stainless steel shaft and bearings
- Applicable standards: NFC 93255, MIL R39023

LINKS TO ADDITIONAL RESOURCES

3D Models

QUICK REFERENCE DATA	
Sensor type	ROTATIONAL, conductive plastic
Output type	Output by turrets
Market appliance	Industrial, avionics
Dimensions	1/2" (12.7 mm) to 1 5/16" (33.3 mm)

ELECTRICAL SPECIFICATIONS

PARAMETER	POTH12	POTH19	POTH22	POTH27	POHR27	POTH33
Theoretical and useful electrical travel	330° ± 3°	340° ± 3°	340° ± 3°	345° ± 3° (1)	345° ± 3°	350° ± 3°
Theoretical electrical travel (on request)	See table “Electrical Travel”					
Useful electrical travel (on request)	See table “Electrical Travel”					
Standard linearity (≤)	± 1 %	± 1 %	± 0.5 %	± 0.5 %	± 0.5 %	± 1 %
Optional linearity (≤)	± 0.5 %	± 0.5 %, ± 0.4 %, ± 0.25 %, ± 0.1 %	± 0.25 %	± 1 %, ± 0.75 %, ± 0.25 %, ±0.2 %, ± 0.1 %	± 1 %, ± 0.25 %, ± 0.1 %	± 0.5 %, ± 0.25 %, ± 0.1 %
Total resistance range (E3)	4.7 kΩ	4.7 kΩ or 10 kΩ	4.7 kΩ or 10 kΩ	4.7 kΩ or 10 kΩ	4.7 kΩ or 10 kΩ	4.7 kΩ or 10 kΩ
Total resistance (on request)	-	2 kΩ	2.2 kΩ	500 Ω, 2 kΩ, 5 kΩ, 6.4 kΩ, 22 kΩ (1)	1 kΩ, 2.2 kΩ, 5 kΩ	1 kΩ, 2 kΩ
Tolerance on R_n	± 10 %, ± 5 % optional, ± 20 % optional					
Output smoothness	< 0.1 % (0.025 % on request)					
Power rating at 70 °C	0.5 W	0.8 W	1 W	1 W	1.25 W	1.5 W
Temperature coefficient	-300 ± 300 ppm/°C					
Wiper current	< 1 mA					
Recommended load impedance	≥ 100 R_n for a linearity = 1 %, ≥ 1000 R_n for a linearity ≤ 0.05 %					
Insulation resistance	≥ 10 GΩ at 500 V_{DC}					
Dielectric strength	500 V_{RMS}, 50 Hz, 1 min	750 V_{RMS}, 50 Hz, 1 min	750 V_{RMS}, 50 Hz, 1 min	750 V_{RMS}, 50 Hz, 1 min	750 V_{RMS}, 50 Hz, 1 min	1000 V_{RMS}, 50 Hz, 1 min

Note

(1) POTH27, POTH22 on request

ELECTRICAL TRAVEL (on request)

PARAMETER	POTH12	POTH19			POTH22	POTH27													POHR27			POTH33
Theoretical	-	73°	340°	337° 35’	-	60°	90°	90°	100°	100°	120°	140° 10’	150°	180°	180°	210° (1)	337° 13’	350°	79° 29’	100°	120°	141° 10’
Useful	-	70°	190°	337° 35’	-	60°	70°	87°	85°	90°	118°	120°	130°	120°	140°	140° (1)	330°	348°	65° 30’	90°	100°	120°

Note

(1) POTH27, POTH22 on request

For technical questions, contact: mcbprecisionpot@vishay.com
THIS DOCUMENT IS SUBJECT TO CHANGE WITHOUT NOTICE. THE PRODUCTS DESCRIBED HEREIN AND THIS DOCUMENT ARE SUBJECT TO SPECIFIC DISCLAIMERS, SET FORTH AT www.vishay.com/doc?91000

MECHANICAL SPECIFICATIONS

PARAMETER		POTH12	POTH19	POTH22	POTH27	POHR27	POTH33
Size		05	08	09	11	11	13
Running and starting torque (c N cm)	first stage	6	8 (7 on request)	10	12 (5 on request)	12	30 (15 on request)
	additional stage	-	7	9	10	10	-
Moment of inertia ($g\ cm^2$)	first stage	≤ 0.2	≤ 1	≤ 0.8	≤ 1	≤ 0.4	≤ 5
	additional stage	-	≤ 0.5	≤ 0.4	≤ 0.4	≤ 0.2	–
Weight (g)	first stage	6	17	18	23	12	< 40
	additional stage	-	7	8	11	5	-
Protection class		IP 50					

PERFORMANCE

PARAMETER	POTH12	POTH19	POTH22	POTH27	POHR27	POTH33
Operating temperature range	-55 °C to +125 °C					
Life	25M cycles, exception: H12 = 10M cycles					10M cycles (25M on request)
Rotation speed (max.)	600 rpm					

Note

- Nothing stated herein shall be construed as a guarantee of quality or durability.

SAP PART NUMBERING GUIDELINES

MODEL	SIZE (mm)	GANG	VALUE	LINEARITY	ANGLE	PACKAGING
POTH	12 19 22 27	1 2 3 4 5 6 (max. number of stages: see "Dimensions")	472 = 4K7 103 = 10K	A = 1 % B = 0.5 % C = 0.25 % D = 0.1 % (see "Electrical Specifications")	330 (POTH12) 340 (POTH19 and POTH22) 345 (POTH27 and POHR27)	B = box
POHR	27					
POTH	33	1			350	

DIMENSIONS in millimeters

POTH12

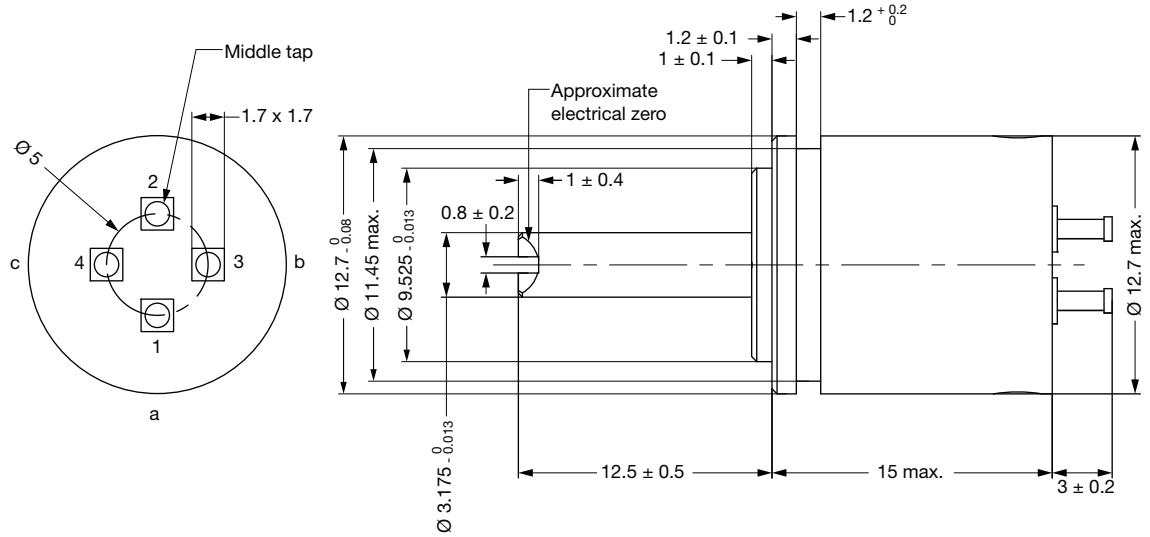

For technical questions, contact: mcbprecisionpot@vishay.com
THIS DOCUMENT IS SUBJECT TO CHANGE WITHOUT NOTICE. THE PRODUCTS DESCRIBED HEREIN AND THIS DOCUMENT ARE SUBJECT TO SPECIFIC DISCLAIMERS, SET FORTH AT www.vishay.com/doc?91000

DIMENSIONS in millimeters

DESIGN ON REQUEST FOR POTH12: SHAFT DESIGN

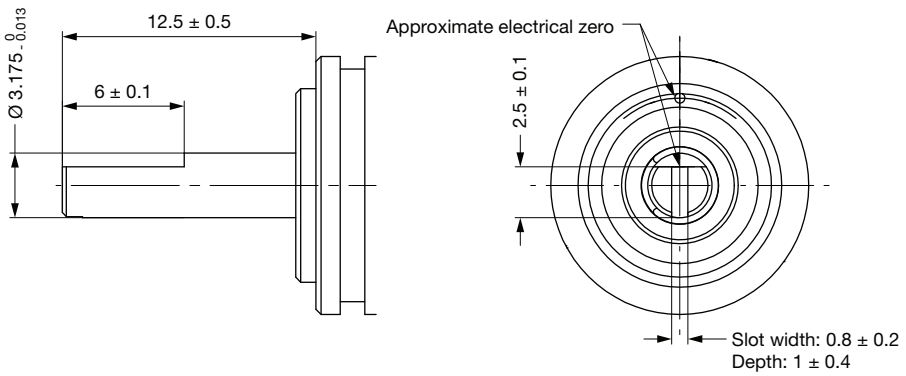

POTH19

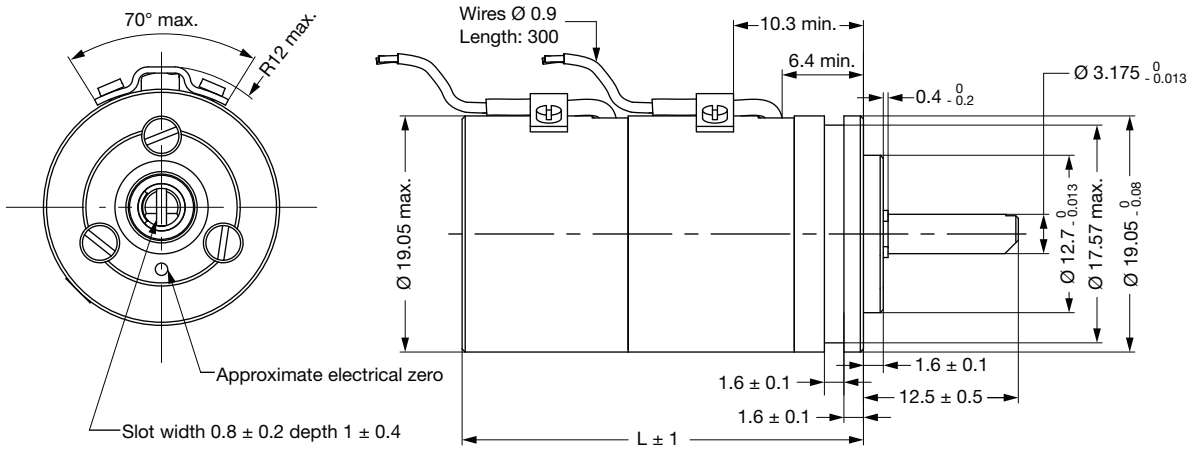

Number of cups	1	2	3	4
L	19	32.4	45.8	59.2

DESIGNS ON REQUEST FOR POTH19

OPTION 1: WITH THROUGH SHAFT

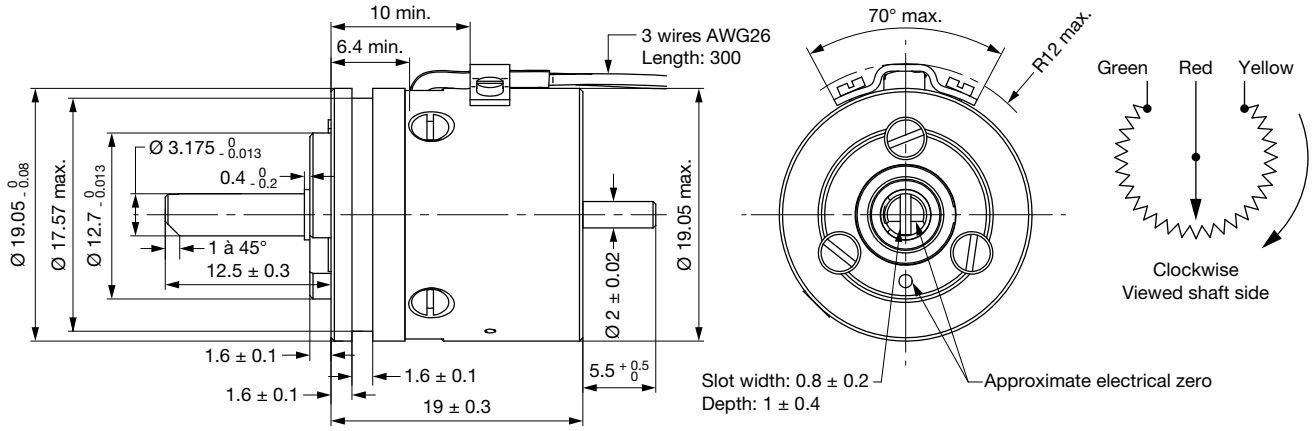

For technical questions, contact: mcbprecisionpot@vishay.com
THIS DOCUMENT IS SUBJECT TO CHANGE WITHOUT NOTICE. THE PRODUCTS DESCRIBED HEREIN AND THIS DOCUMENT ARE SUBJECT TO SPECIFIC DISCLAIMERS, SET FORTH AT www.vishay.com/doc?91000

DIMENSIONS in millimeters

OPTION 2: WITH MIDDLE TAP

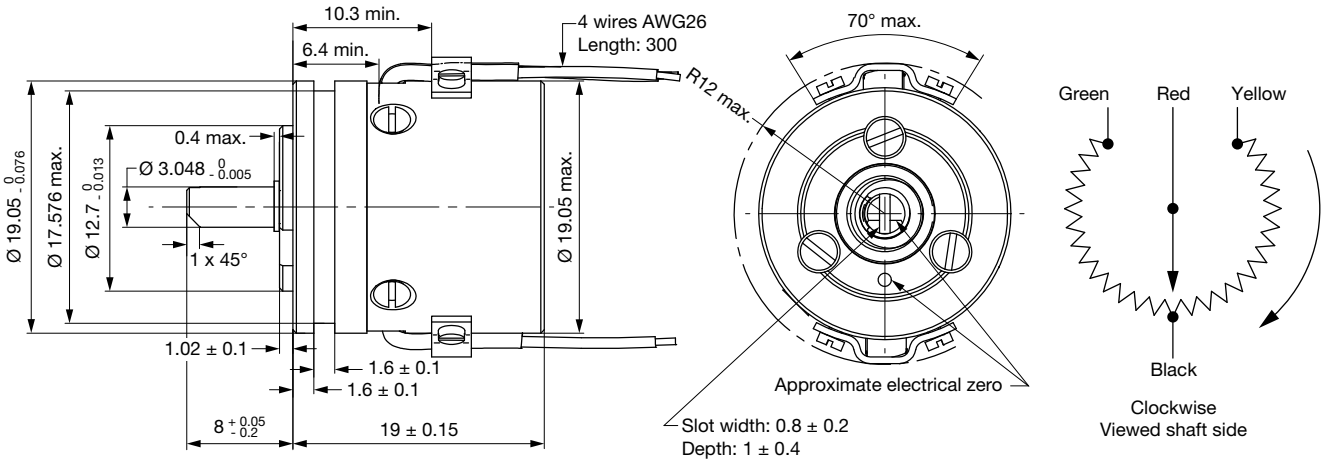

POTH22

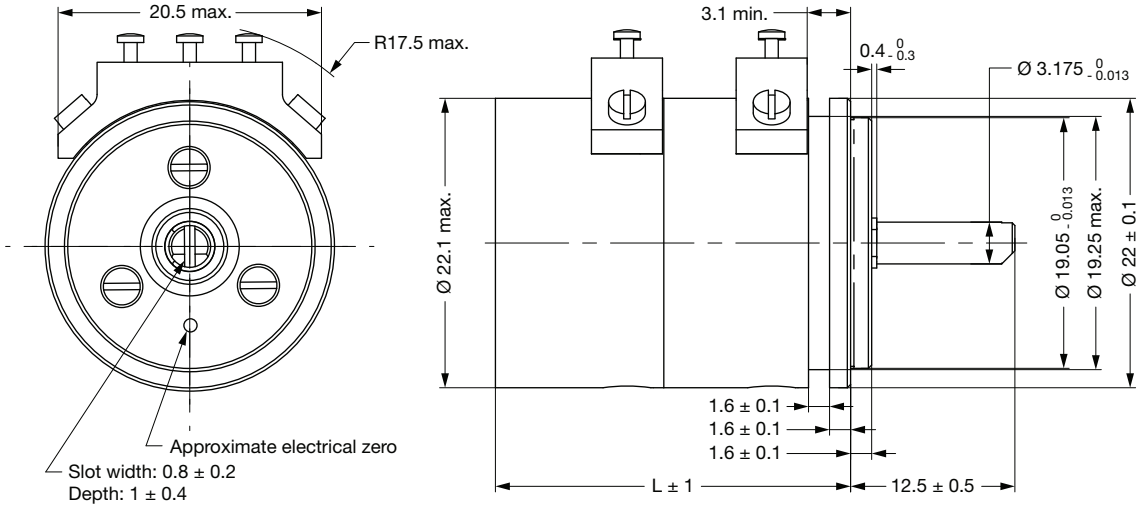

Number of cups	1	2	3	4
L	16	27	38	49

DESIGNS ON REQUEST FOR POTH22

OPTION 1

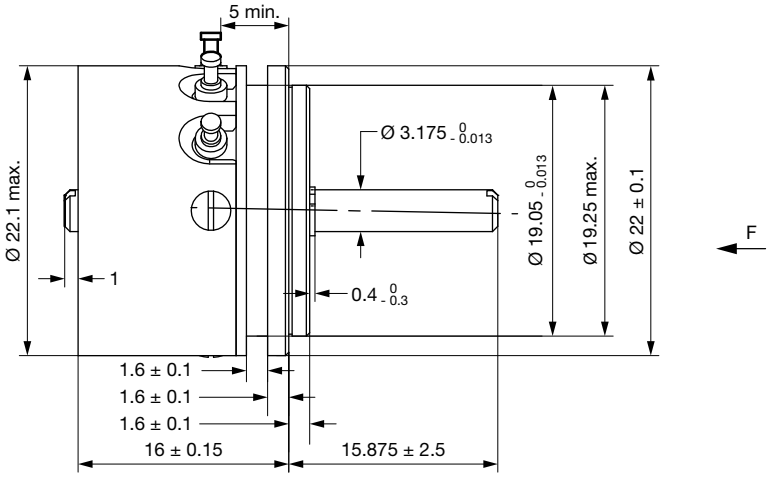

For technical questions, contact: mcbprecisionpot@vishay.com
THIS DOCUMENT IS SUBJECT TO CHANGE WITHOUT NOTICE. THE PRODUCTS DESCRIBED HEREIN AND THIS DOCUMENT ARE SUBJECT TO SPECIFIC DISCLAIMERS, SET FORTH AT www.vishay.com/doc?91000

DIMENSIONS in millimeters

OPTION 2

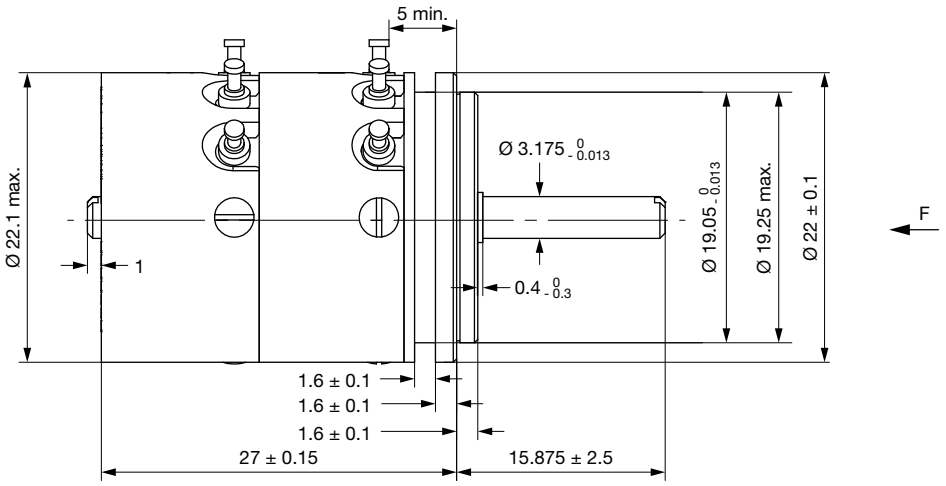

OPTION 1 AND OPTION 2 - VIEW "F"

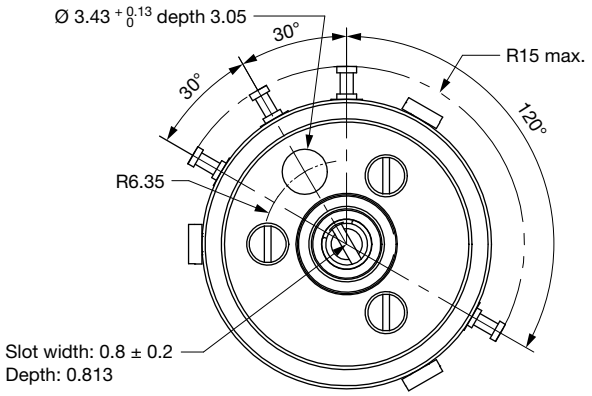

OPTION 3

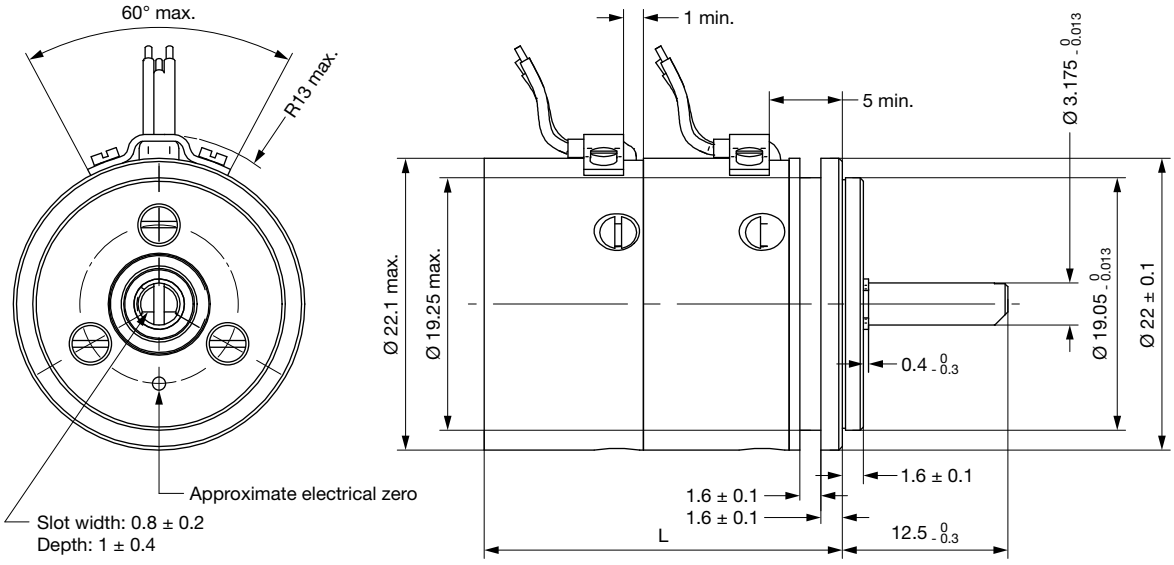

Number of cups	2	3	4	5
L	27	38	49	60

For technical questions, contact: mcbprecisionpot@vishay.com
THIS DOCUMENT IS SUBJECT TO CHANGE WITHOUT NOTICE. THE PRODUCTS DESCRIBED HEREIN AND THIS DOCUMENT ARE SUBJECT TO SPECIFIC DISCLAIMERS, SET FORTH AT www.vishay.com/doc?91000

DIMENSIONS in millimeters

POTH27

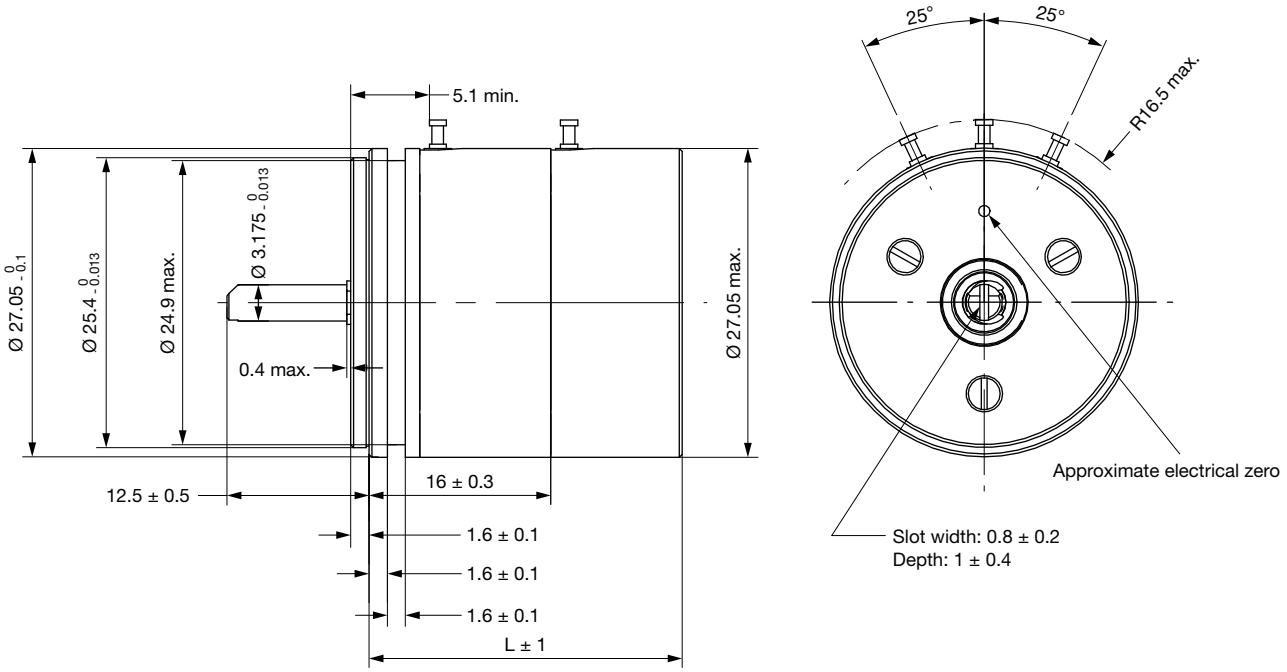

Number of cups	1	2	3	4
L	16	27	38	49

DESIGNS ON REQUEST FOR POTH27

OPTION 1: BIG AND THROUGH SHAFT

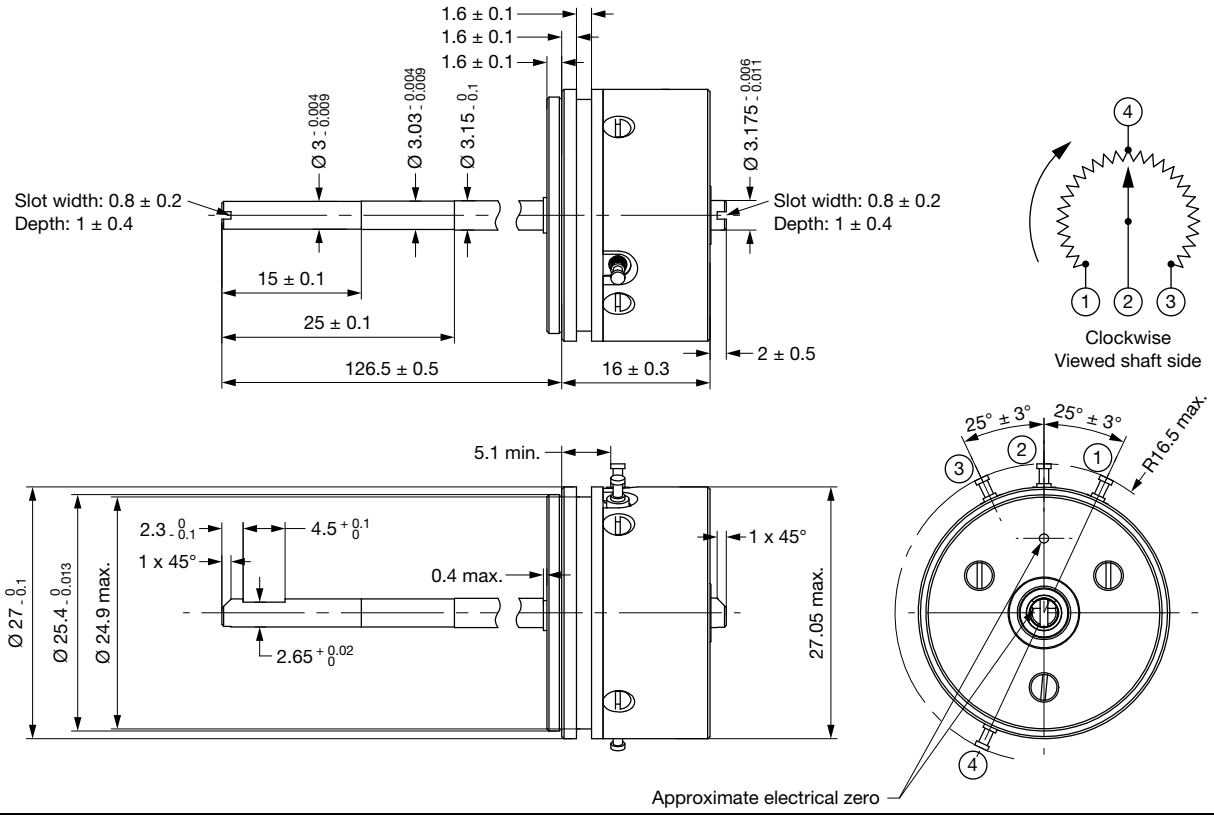

For technical questions, contact: mcbprecisionpot@vishay.com
THIS DOCUMENT IS SUBJECT TO CHANGE WITHOUT NOTICE. THE PRODUCTS DESCRIBED HEREIN AND THIS DOCUMENT ARE SUBJECT TO SPECIFIC DISCLAIMERS, SET FORTH AT www.vishay.com/doc?91000

DIMENSIONS in millimeters

OPTION 2

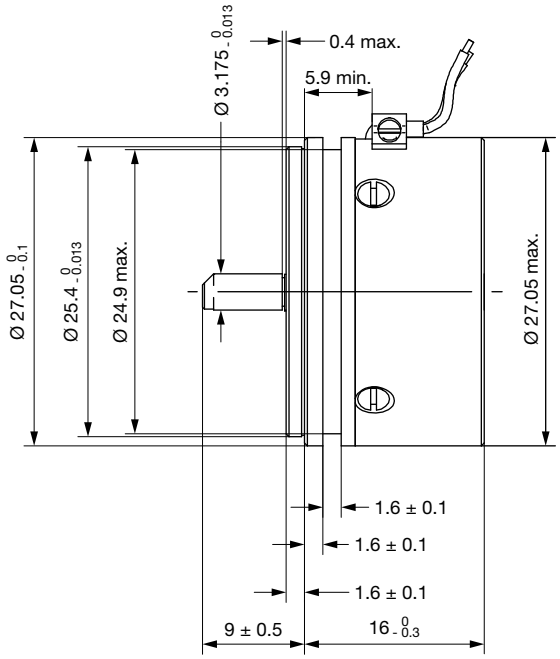

OPTION 3

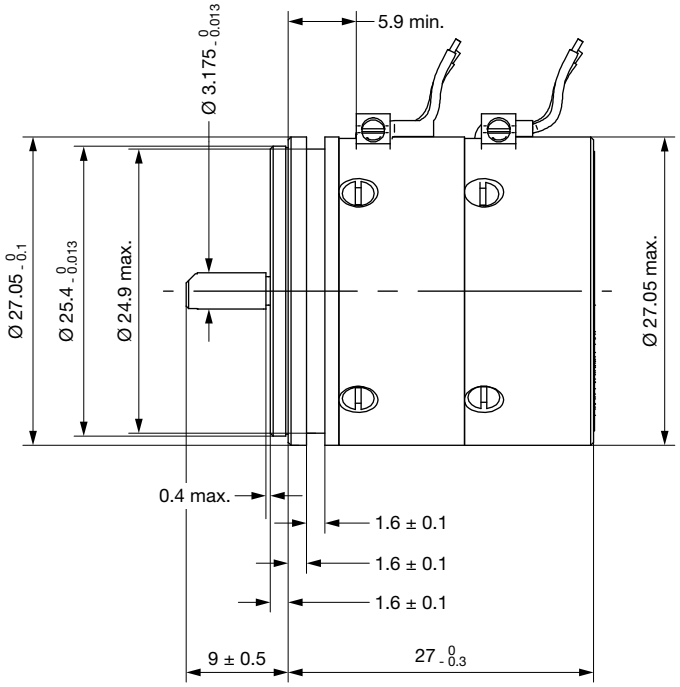

For technical questions, contact: mcbprecisionpot@vishay.com
THIS DOCUMENT IS SUBJECT TO CHANGE WITHOUT NOTICE. THE PRODUCTS DESCRIBED HEREIN AND THIS DOCUMENT ARE SUBJECT TO SPECIFIC DISCLAIMERS, SET FORTH AT www.vishay.com/doc?91000

DIMENSIONS in millimeters

OPTION 4

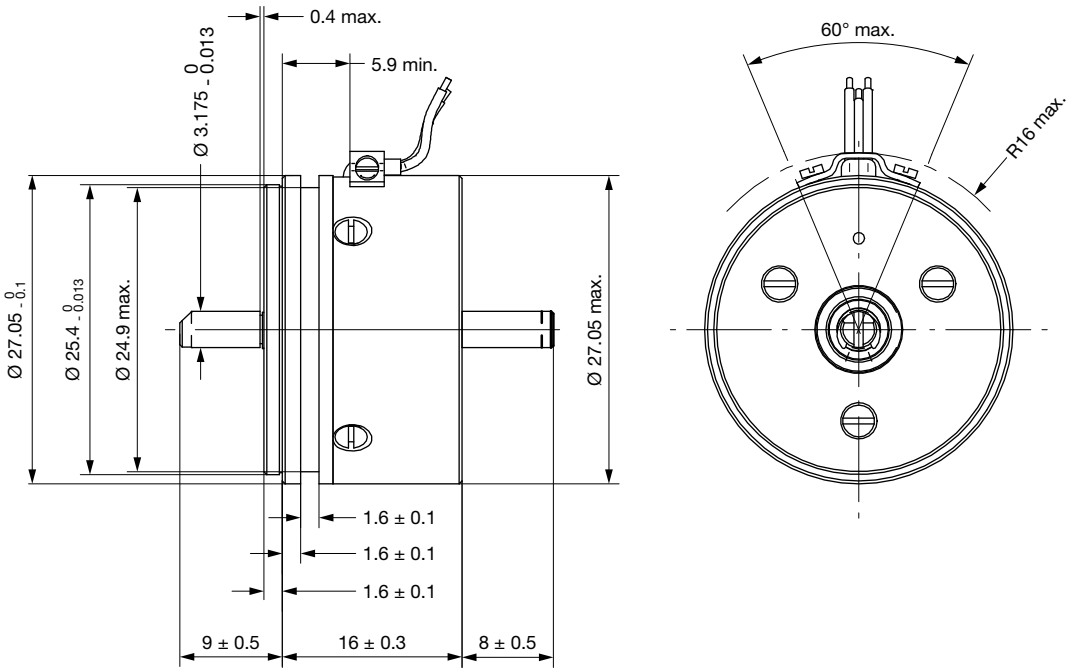

OPTION 5: WITH CONNECTOR

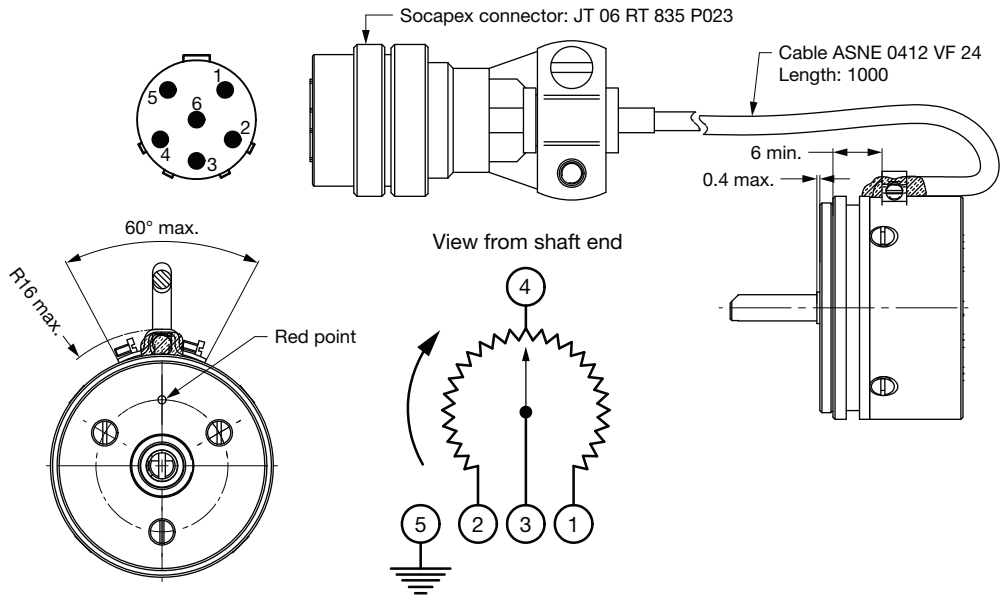

For technical questions, contact: mcbprecisionpot@vishay.com
THIS DOCUMENT IS SUBJECT TO CHANGE WITHOUT NOTICE. THE PRODUCTS DESCRIBED HEREIN AND THIS DOCUMENT ARE SUBJECT TO SPECIFIC DISCLAIMERS, SET FORTH AT www.vishay.com/doc?91000

DIMENSIONS in millimeters

POHR27

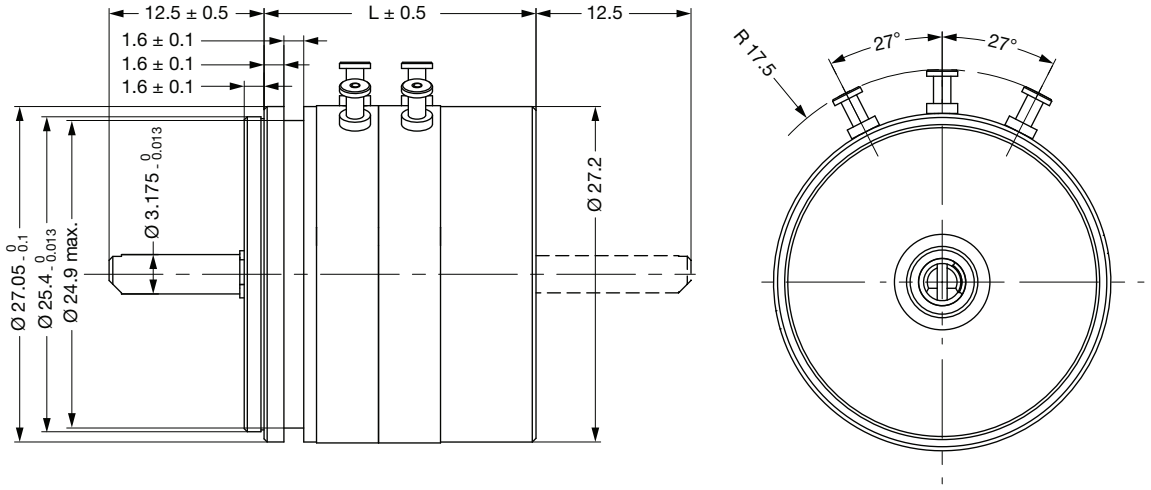

Number of cups	1	2	3	4	5	6
L	17	22	27	32	37	42

DESIGNS ON REQUEST FOR POHR27

OPTION 1

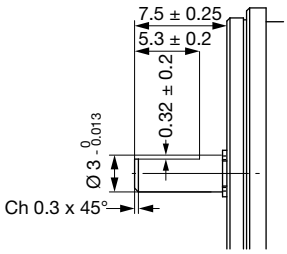

OPTION 2: 4 CUPS WITH INTERMEDIATE HOUSING

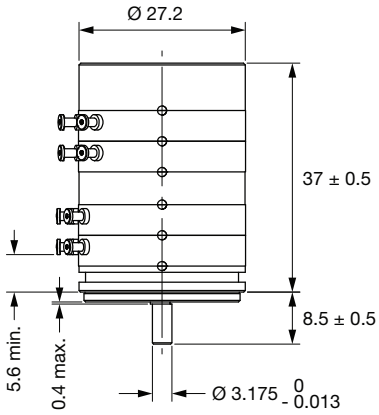

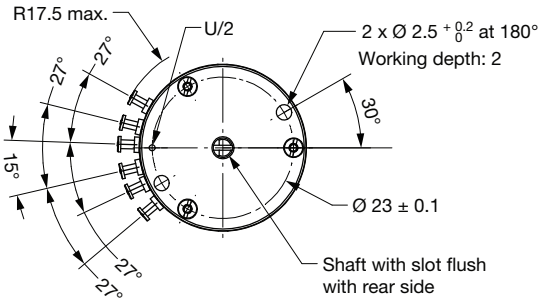

For technical questions, contact: mcbprecisionpot@vishay.com
THIS DOCUMENT IS SUBJECT TO CHANGE WITHOUT NOTICE. THE PRODUCTS DESCRIBED HEREIN AND THIS DOCUMENT ARE SUBJECT TO SPECIFIC DISCLAIMERS, SET FORTH AT www.vishay.com/doc?91000

DIMENSIONS in millimeters

OPTION 3: FLANGES WITH THREADED HOLES

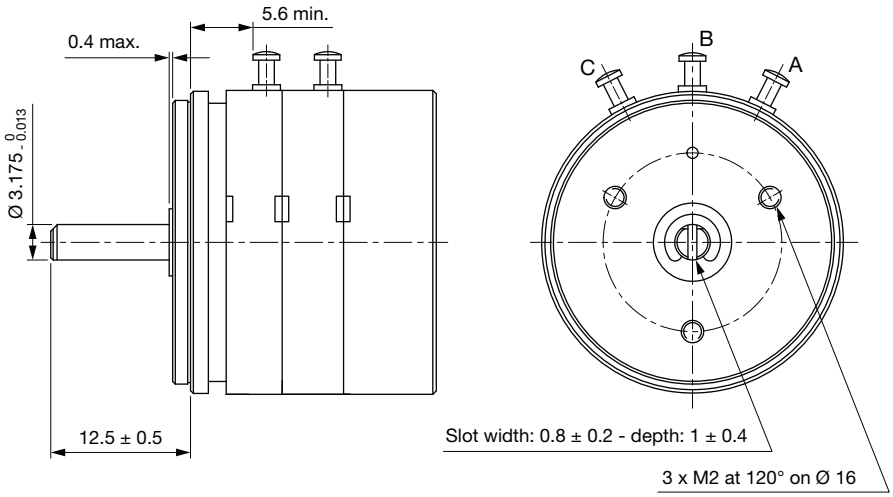

POTH33

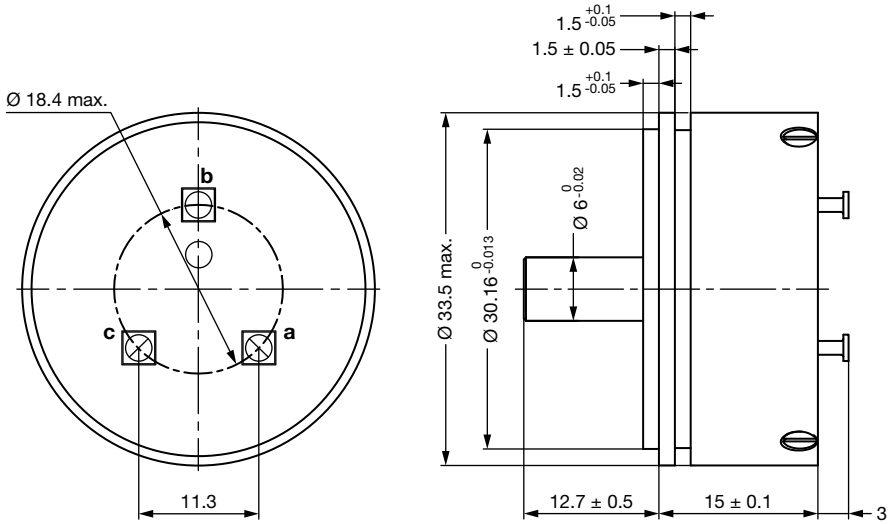

ELECTRICAL DIAGRAM

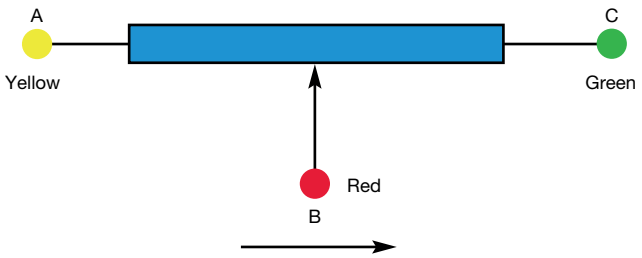

Clockwise direction viewed from control shaft side

POWER RATING CHART

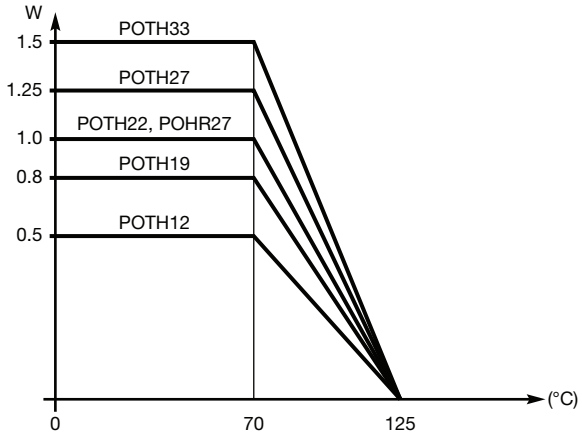

For technical questions, contact: mcbprecisionpot@vishay.com
THIS DOCUMENT IS SUBJECT TO CHANGE WITHOUT NOTICE. THE PRODUCTS DESCRIBED HEREIN AND THIS DOCUMENT ARE SUBJECT TO SPECIFIC DISCLAIMERS, SET FORTH AT www.vishay.com/doc?91000

OPTIONS (on request)

- Other total resistance
- Other tolerances on R_n (see “Electrical Specifications” table or other)
- Other linearities (see “Electrical Specifications” table or other)
- Other theoretical and useful electrical travel: 35° 30’ (POTH22)
- Connectors (center tap)
- Electrical reference: 0.5 U ± 0.1 % U or 0.5 U ± 0.05 % U (POTH27); 0.5 U ± 0.4 % U or 0.5 U ± 0.2 % (POTH19); 0.22 U ± 0.67 % U (POHR27)
- Wire outputs (except H12): length 300 mm or 350 mm, gauge 26 (POTH27)
- Other length of shaft: 9 mm in place of 12.5 mm (POTH27), 6.8 mm in place of 12.55 mm (POHR27)
- Through shaft (except H12): length 0 mm or 12.5 mm (as shown in “Dimensions” POTH27)
- Other mechanical interfaces (shaft, flange, housing)
- Wiper type:
  - 5 strands
  - 3 lamellas (max. intensity is service = 1 mA, max. intensity accidental = 5 mA)
  - 10 strands (max. intensity in service = 5 mA, max. intensity accidental = 6 mA)
- One example of other dimensions
  - POTH33 (performances: see POTH27)
  - POTH27(22) (performances: see POTH27)

OPTION FOR THE DIMENSIONS in millimeters (design on request)

POTH33

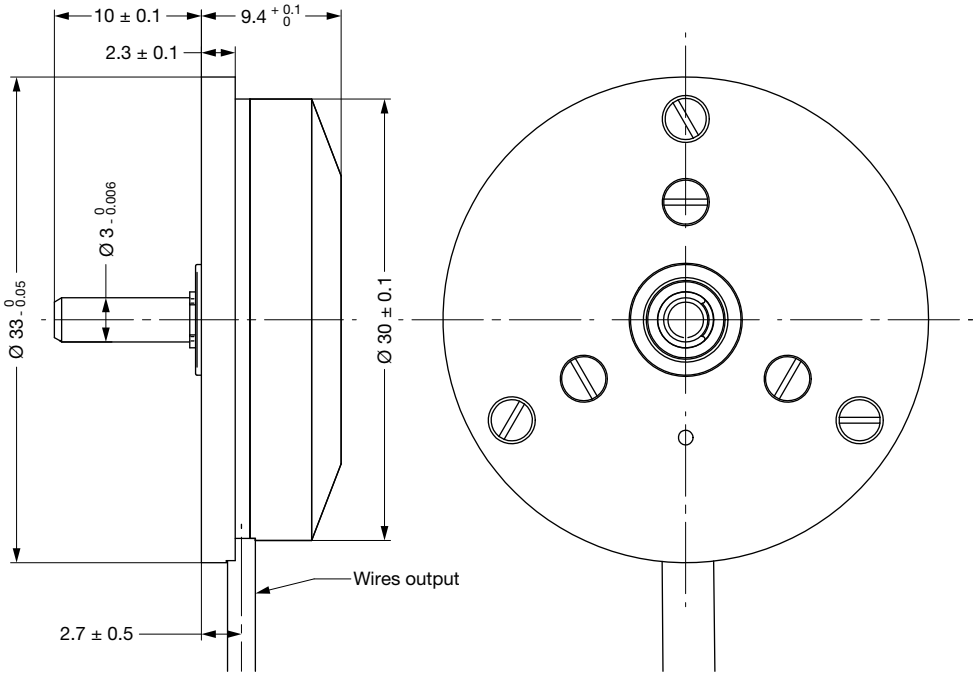

For technical questions, contact: mcbprecisionpot@vishay.com
THIS DOCUMENT IS SUBJECT TO CHANGE WITHOUT NOTICE. THE PRODUCTS DESCRIBED HEREIN AND THIS DOCUMENT ARE SUBJECT TO SPECIFIC DISCLAIMERS, SET FORTH AT www.vishay.com/doc?91000

OPTION FOR THE DIMENSIONS in millimeters (design on request)

POTH27(22)

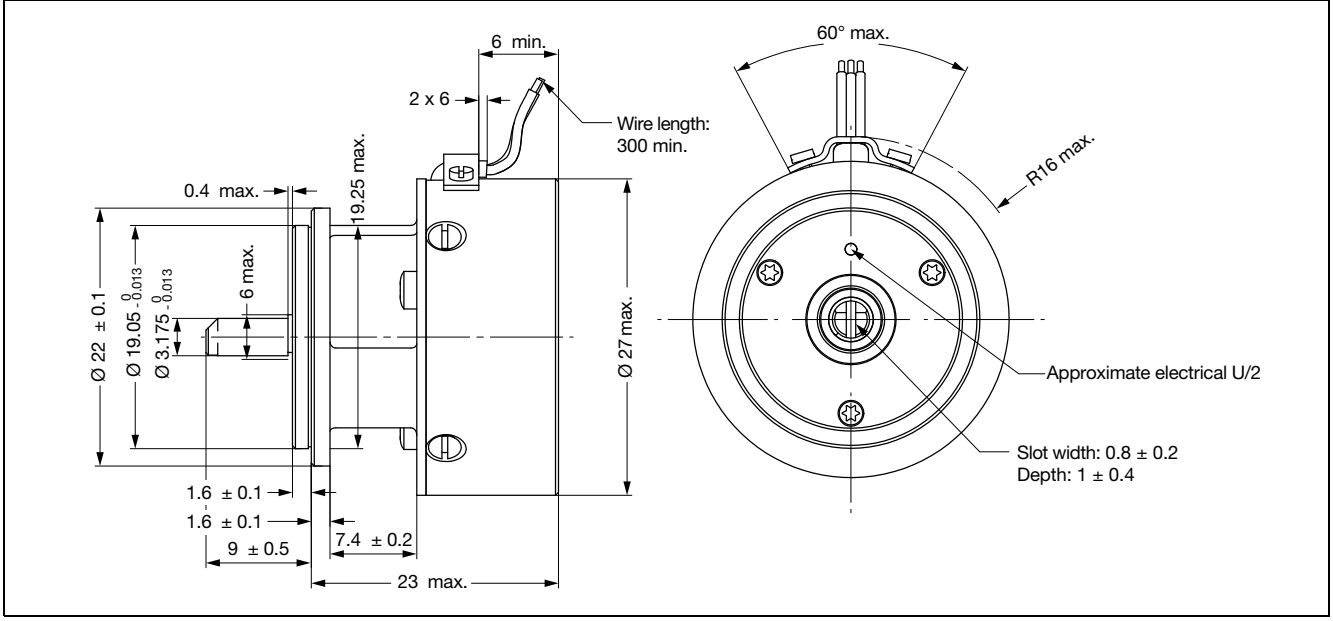

Note

- Other shaft design for POHR27: see “Dimensions” POHR27

- Middle tap: POTH22; POTH27
- Additional output: plug at 90° and 180° (POTH19)
- Protection resistor: 3300 Ω ± 5 % 1/8 W on POTH27
- Specific connector: plug Socapex JT 06 RT 835 P023 (or equivalent) with cable length 1 m
- Specific design to support high temperature +200 °C (during short time tbd)
- Low torque: ≤ 5 cNcm (POTH27); ≤ 10 cNcm (POHR27x4)
- Specific function:
  for POTH22 1 or 2 gangs

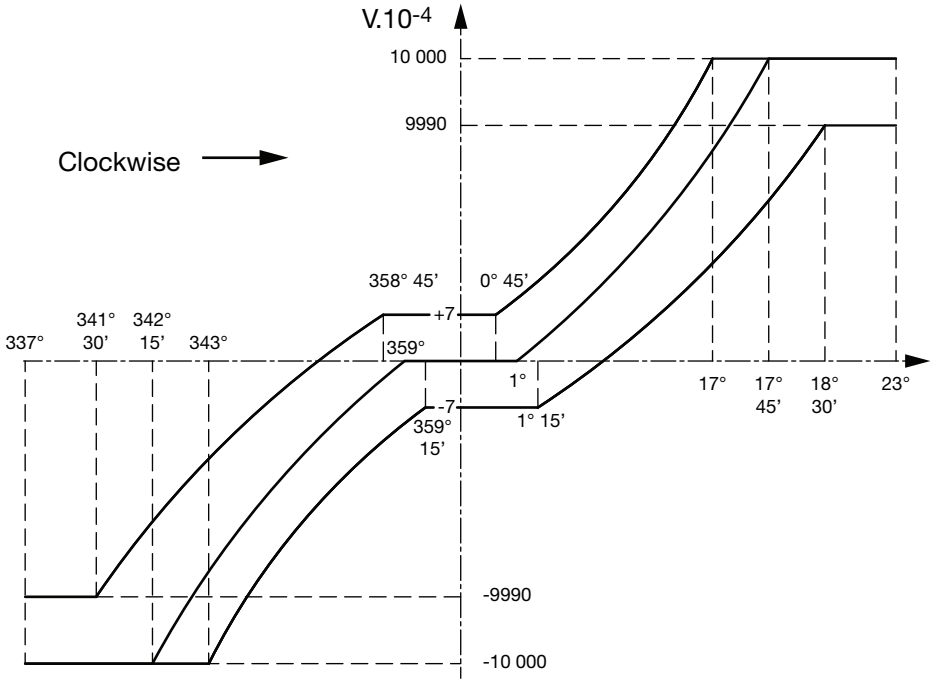

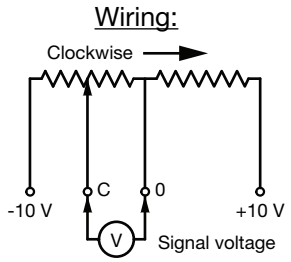

For technical questions, contact: mcbprecisionpot@vishay.com
THIS DOCUMENT IS SUBJECT TO CHANGE WITHOUT NOTICE. THE PRODUCTS DESCRIBED HEREIN AND THIS DOCUMENT ARE SUBJECT TO SPECIFIC DISCLAIMERS, SET FORTH AT www.vishay.com/doc?91000

for POTH27 1 or 2 gangs

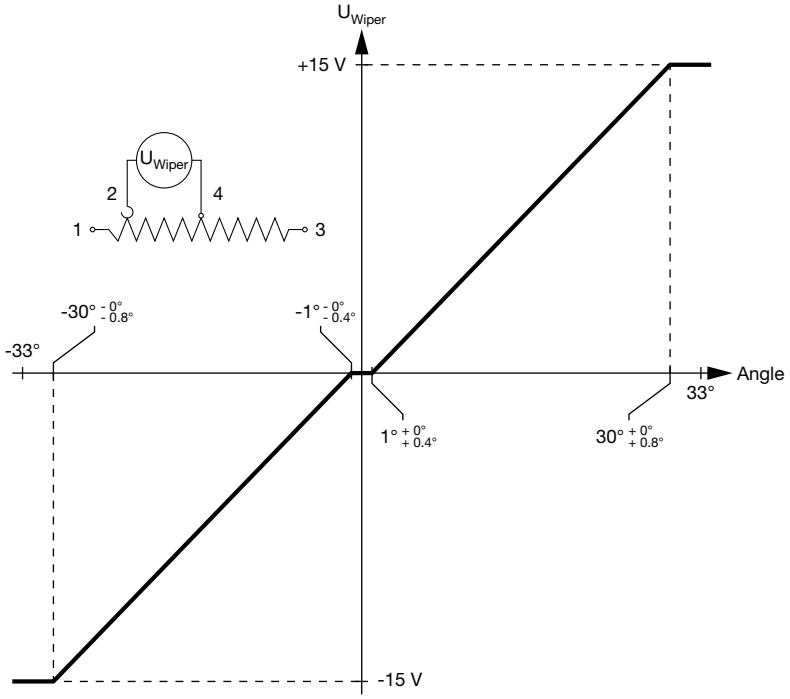

- Electrical phasing (inter cups): ± 0.03 %
- Temperature coefficient: -200 ppm/°C ± 200 ppm/°C in function of ohmic value

THIS DOCUMENT IS SUBJECT TO CHANGE WITHOUT NOTICE. THE PRODUCTS DESCRIBED HEREIN AND THIS DOCUMENT ARE SUBJECT TO SPECIFIC DISCLAIMERS, SET FORTH AT www.vishay.com/doc?91000

Disclaimer

ALL PRODUCT, PRODUCT SPECIFICATIONS AND DATA ARE SUBJECT TO CHANGE WITHOUT NOTICE TO IMPROVE RELIABILITY, FUNCTION OR DESIGN OR OTHERWISE.

Vishay Intertechnology, Inc., its affiliates, agents, and employees, and all persons acting on its or their behalf (collectively, “Vishay”), disclaim any and all liability for any errors, inaccuracies or incompleteness contained in any datasheet or in any other disclosure relating to any product.

Vishay makes no warranty, representation or guarantee regarding the suitability of the products for any particular purpose or the continuing production of any product. To the maximum extent permitted by applicable law, Vishay disclaims (i) any and all liability arising out of the application or use of any product, (ii) any and all liability, including without limitation special, consequential or incidental damages, and (iii) any and all implied warranties, including warranties of fitness for particular purpose, non-infringement and merchantability.

Statements regarding the suitability of products for certain types of applications are based on Vishay's knowledge of typical requirements that are often placed on Vishay products in generic applications. Such statements are not binding statements about the suitability of products for a particular application. It is the customer's responsibility to validate that a particular product with the properties described in the product specification is suitable for use in a particular application. Parameters provided in datasheets and / or specifications may vary in different applications and performance may vary over time. All operating parameters, including typical parameters, must be validated for each customer application by the customer's technical experts. Product specifications do not expand or otherwise modify Vishay's terms and conditions of purchase, including but not limited to the warranty expressed therein.

Hyperlinks included in this datasheet may direct users to third-party websites. These links are provided as a convenience and for informational purposes only. Inclusion of these hyperlinks does not constitute an endorsement or an approval by Vishay of any of the products, services or opinions of the corporation, organization or individual associated with the third-party website. Vishay disclaims any and all liability and bears no responsibility for the accuracy, legality or content of the third-party website or for that of subsequent links.

Except as expressly indicated in writing, Vishay products are not designed for use in medical, life-saving, or life-sustaining applications or for any other application in which the failure of the Vishay product could result in personal injury or death. Customers using or selling Vishay products not expressly indicated for use in such applications do so at their own risk. Please contact authorized Vishay personnel to obtain written terms and conditions regarding products designed for such applications.

No license, express or implied, by estoppel or otherwise, to any intellectual property rights is granted by this document or by any conduct of Vishay. Product names and markings noted herein may be trademarks of their respective owners.

© 2024 VISHAY INTERTECHNOLOGY, INC. ALL RIGHTS RESERVED