Automotive Power Inductor, High Isolation Voltage 1.5 kV, SMD, High Temperature 180 °C

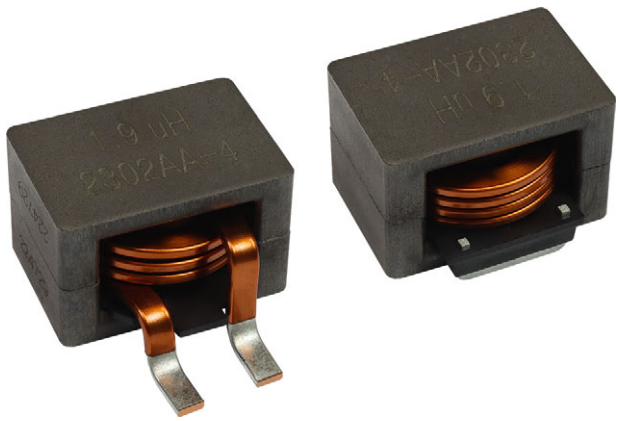

FEATURES

- Size: 20.0 mm x 14.0 mm x 14.0 mm
- High isolation voltage 1.5 kV_{DC}
- High impedance for differential filtering applications (1 kΩ at 80 MHz peak frequency)
- Soft saturation provides stable inductance with transient current handling 5 x the heat rating current
- Third header pin for added mechanical mounting stability when soldered
- AEC-Q200 qualified
- High temperature continuous operation up to 180 °C
- Material categorization: for definitions of compliance please see www.vishay.com/doc?99912

AUTOMOTIVE GRADE

Pb-free

RoHS COMPLIANT

HALOGEN FREE

GREEN (5-2008)

LINKS TO ADDITIONAL RESOURCES

Product Page

Calculators

MATERIAL SPECIFICATIONS

- Core: powdered iron alloy
- Wire: 200 °C polyamide insulated copper
- Plating: terminals solder dipped in tin alloy (Sn99.3Cu0.7), mounting pin electroplated with 100 % matte tin
- Weight: 19.2 g

APPLICATIONS

- Automotive on-board chargers (OBC)
- High voltage inverters and systems
- Power factor correction (PFC)
- High voltage DC battery filter

STANDARD ELECTRICAL SPECIFICATIONS

PART NUMBER	L_0 INDUCTANCE ± 20 % AT 0.25 V, 100 kHz, 0 A (μH)	DCR AT 25 °C (mΩ)	DCR AT 25 °C (mΩ)	HEAT RATING CURRENT DC (A) (1)	SATURATION CURRENT DC TYP. (A) (2)		SRF TYP. (MHz)
		TYP.	MAX.	TYP.	20 % DROP	30 % DROP	
IHDV0808ACFS1R9M3A	1.9	1.3	1.5	30.0	80.0	110.0	83

Notes

- All test data is referenced to 25 °C ambient
- Operating temperature range -40 °C to +180 °C
- The part temperature (ambient + temperature rise) should not exceed the maximum rating under worst case operating conditions. Circuit design, component placement, PCB trace size and thickness, airflow and other cooling provisions all affect the part temperature. Part temperature should be verified in the end application
- Isolation voltage (coil to core or coil to mounting pin) = 1.5 kV_{DC}, 5 mA, 5 s

(1) DC current (A) that will cause an approximate ΔT of 40 °C

(2) DC current (A) that will cause L_0 to drop approximately 20 % and 30 %, respectively

For technical questions, contact: magnetics@vishay.com

THIS DOCUMENT IS SUBJECT TO CHANGE WITHOUT NOTICE. THE PRODUCTS DESCRIBED HEREIN AND THIS DOCUMENT ARE SUBJECT TO SPECIFIC DISCLAIMERS, SET FORTH AT www.vishay.com/doc?91000

DIMENSIONS in inches [millimeters]

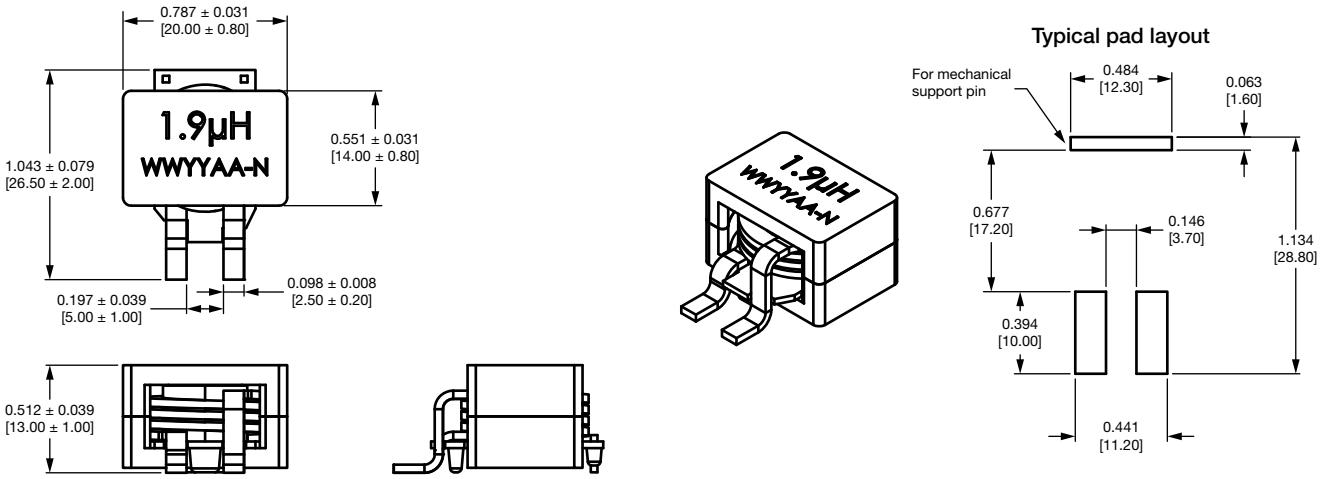

SCHEMATIC

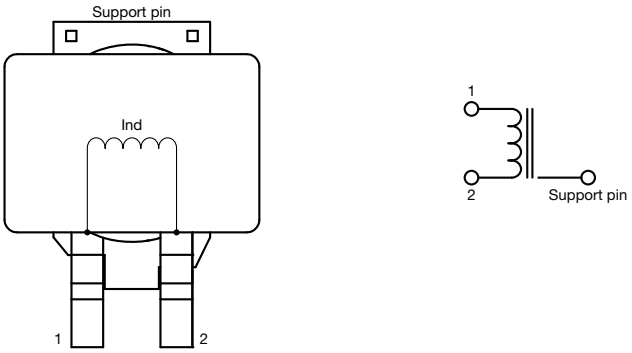

DESCRIPTION

IHDV-0808AC-3A	1.9 µH	± 20 %	FS	e2
MODEL	INDUCTANCE VALUE	INDUCTANCE TOLERANCE	PACKAGE CODE	JEDEC® LEAD (Pb)-FREE STANDARD

GLOBAL PART NUMBER

I H D V	0 8 0 8 A C	F	S	1 R 9	M	3 A
PRODUCT FAMILY	SIZE	PACKAGE CODE	MOUNTING STYLE	INDUCTANCE VALUE	INDUCTANCE TOLERANCE	SERIES
		F = tape (100 pcs/reel) **E** = tray pack (150 pcs/box)	**S** = SMD	**1R9** = 1.9 µH	**M** = ± 20 %	

Note

- For additional packaging details see: https://www.vishay.com/doc?34150

For technical questions, contact: magnetics@vishay.com

THIS DOCUMENT IS SUBJECT TO CHANGE WITHOUT NOTICE. THE PRODUCTS DESCRIBED HEREIN AND THIS DOCUMENT ARE SUBJECT TO SPECIFIC DISCLAIMERS, SET FORTH AT www.vishay.com/doc?91000

PERFORMANCE GRAPHS

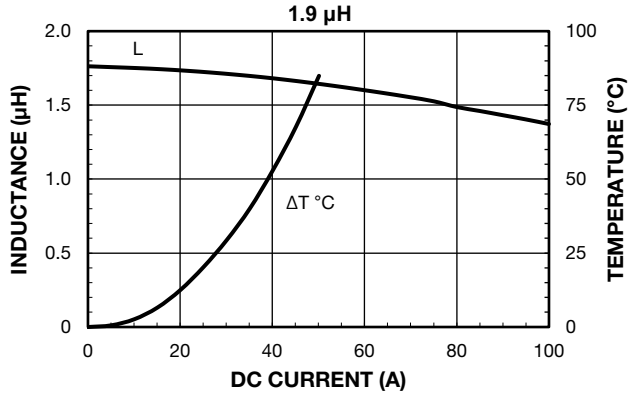

PERFORMANCE GRAPHS: INDUCTANCE AND Q VS. FREQUENCY

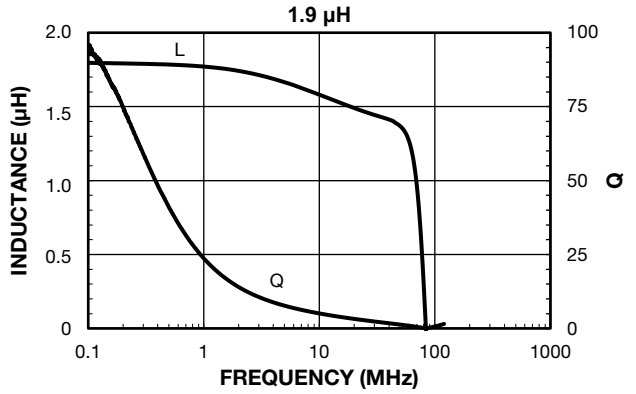

PERFORMANCE GRAPHS: IMPEDANCE VS. FREQUENCY

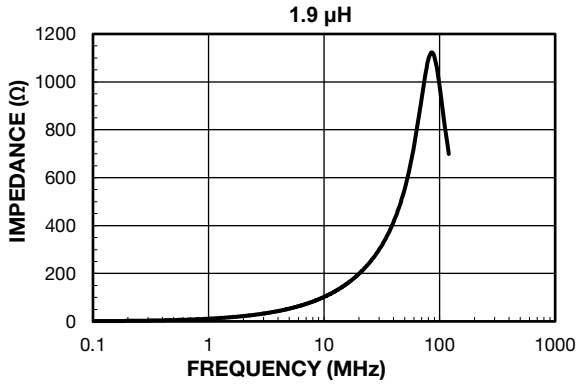

For technical questions, contact: magnetics@vishay.com
THIS DOCUMENT IS SUBJECT TO CHANGE WITHOUT NOTICE. THE PRODUCTS DESCRIBED HEREIN AND THIS DOCUMENT ARE SUBJECT TO SPECIFIC DISCLAIMERS, SET FORTH AT www.vishay.com/doc?91000

Disclaimer

ALL PRODUCT, PRODUCT SPECIFICATIONS AND DATA ARE SUBJECT TO CHANGE WITHOUT NOTICE TO IMPROVE RELIABILITY, FUNCTION OR DESIGN OR OTHERWISE.

Vishay Intertechnology, Inc., its affiliates, agents, and employees, and all persons acting on its or their behalf (collectively, “Vishay”), disclaim any and all liability for any errors, inaccuracies or incompleteness contained in any datasheet or in any other disclosure relating to any product.

Vishay makes no warranty, representation or guarantee regarding the suitability of the products for any particular purpose or the continuing production of any product. To the maximum extent permitted by applicable law, Vishay disclaims (i) any and all liability arising out of the application or use of any product, (ii) any and all liability, including without limitation special, consequential or incidental damages, and (iii) any and all implied warranties, including warranties of fitness for particular purpose, non-infringement and merchantability.

Statements regarding the suitability of products for certain types of applications are based on Vishay's knowledge of typical requirements that are often placed on Vishay products in generic applications. Such statements are not binding statements about the suitability of products for a particular application. It is the customer's responsibility to validate that a particular product with the properties described in the product specification is suitable for use in a particular application. Parameters provided in datasheets and / or specifications may vary in different applications and performance may vary over time. All operating parameters, including typical parameters, must be validated for each customer application by the customer's technical experts. Product specifications do not expand or otherwise modify Vishay's terms and conditions of purchase, including but not limited to the warranty expressed therein.

Hyperlinks included in this datasheet may direct users to third-party websites. These links are provided as a convenience and for informational purposes only. Inclusion of these hyperlinks does not constitute an endorsement or an approval by Vishay of any of the products, services or opinions of the corporation, organization or individual associated with the third-party website. Vishay disclaims any and all liability and bears no responsibility for the accuracy, legality or content of the third-party website or for that of subsequent links.

Vishay products are not designed for use in life-saving or life-sustaining applications or any application in which the failure of the Vishay product could result in personal injury or death unless specifically qualified in writing by Vishay. Customers using or selling Vishay products not expressly indicated for use in such applications do so at their own risk. Please contact authorized Vishay personnel to obtain written terms and conditions regarding products designed for such applications.

No license, express or implied, by estoppel or otherwise, to any intellectual property rights is granted by this document or by any conduct of Vishay. Product names and markings noted herein may be trademarks of their respective owners.

© 2026 VISHAY INTERTECHNOLOGY, INC. ALL RIGHTS RESERVED

THIS DOCUMENT IS SUBJECT TO CHANGE WITHOUT NOTICE. THE PRODUCTS DESCRIBED HEREIN AND THIS DOCUMENT ARE SUBJECT TO SPECIFIC DISCLAIMERS, SET FORTH AT www.vishay.com/doc?91000