128 x 64 Graphic LCD

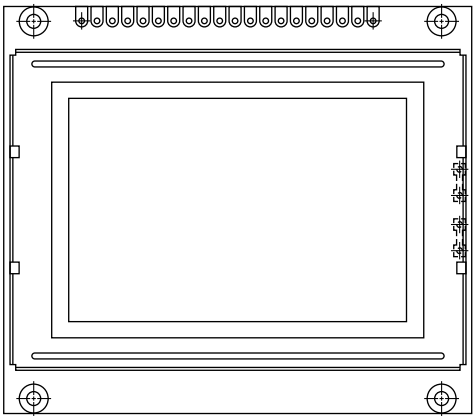

FEATURES

- Type: Graphic
- Display format: 128 x 64 dots
- Built-in controller: RA6963
- Duty cycle: 1/64
- +5 V power supply
- N.V. built-in
- Material categorization: For definitions of compliance please see www.vishay.com/doc?99912

Pb-free
RoHS COMPLIANT

MECHANICAL DATA

ITEM	STANDARD VALUE	UNIT
Module Dimension	78.0 x 70.0 x 14.3	mm
Viewing Area	62.0 x 44.0	
Dot Size	0.42 x 0.58	
Dot Pitch	0.44 x 0.60	
Mounting Hole	68.0 x 64.92	
Character Size	n/a	

ABSOLUTE MAXIMUM RATINGS

ITEM	SYMBOL	STANDARD VALUE			UNIT
		MIN.	TYP.	MAX.	
Power Supply	V_{DD} to V_{SS}	4.5	5.0	5.5	V
Input Voltage	V_I	-0.3	-	V_{DD}	

Note

- V_{SS} = 0 V, V_{DD} = 5.0 V

ELECTRICAL CHARACTERISTICS

ITEM	SYMBOL	CONDITION	STANDARD VALUE			UNIT
			MIN.	TYP.	MAX.	
Input Voltage	V_{DD}	L level	0.7 V_{DD}	-	V_{DD}	V
	V_{IO}	H level	0	-	0.3 V_{DD}	
Supply Current	I_{DD}	V_{DD} = +5 V	-	11.2	11.8	mA
Recommended LC Driving Voltage for Normal Temperature Version Module	V_{DD} to V_0	-20 °C	9.6	10.1	10.6	V
		0 °C	9.4	9.9	10.4	
		25 °C	9.4	9.6	10.4	
		50 °C	8.7	9.2	9.7	
		70 °C	8.5	9.0	9.5	
LED Forward Voltage	V_F	25 °C	-	4.2	-	V
LED Forward Current - Array Hight	I_F	25 °C	-	480	960	mA
LED Forward Current - Array Low			-	350	700	
EL Power Supply Current	I_{EL}	V_{EL} = 110 V_{AC}, 400 Hz	-	-	5.0	mA

OPTIONS

PROCESS COLOR						BACKLIGHT			
TN	STN Gray	STN Yellow	STN Blue	FSTN B&W	STN Color	None	LED	EL	CCFL
	x	x	x	x		x	x	x	

For detailed information, please see the “Product Numbering System” document.

For technical questions, contact: displays@vishay.com
THIS DOCUMENT IS SUBJECT TO CHANGE WITHOUT NOTICE. THE PRODUCTS DESCRIBED HEREIN AND THIS DOCUMENT ARE SUBJECT TO SPECIFIC DISCLAIMERS, SET FORTH AT www.vishay.com/doc?91000

INTERFACE PIN FUNCTION

PIN NO.	SYMBOL	FUNCTION
1	FG/V_{EE}	Frame ground/N/V
2	V_{SS}	Power supply (0 V)
3	V_{DD}	Power supply (+5 V)
4	V_0	Power supply for LCD driver
5	$\overline{WR}$	Data write
6	$\overline{RD}$	Data read
7	$\overline{CE}$	Chip enable
8	$\overline{CD}$	Command/data read/write
9	$\overline{RST}$	Controller reset
10	DB0	Data bus line
11	DB1	Data bus line
12	DB2	Data bus line
13	DB3	Data bus line
14	DB4	Data bus line
15	DB5	Data bus line
16	DB6	Data bus line
17	DB7	Data bus line
18	FS	Font select
19	K	Power supply for LED B/L (0 V)
20	A	Power supply for LED (+4.2 V), $R_A = 0\ \Omega$

DIMENSIONS in millimeters

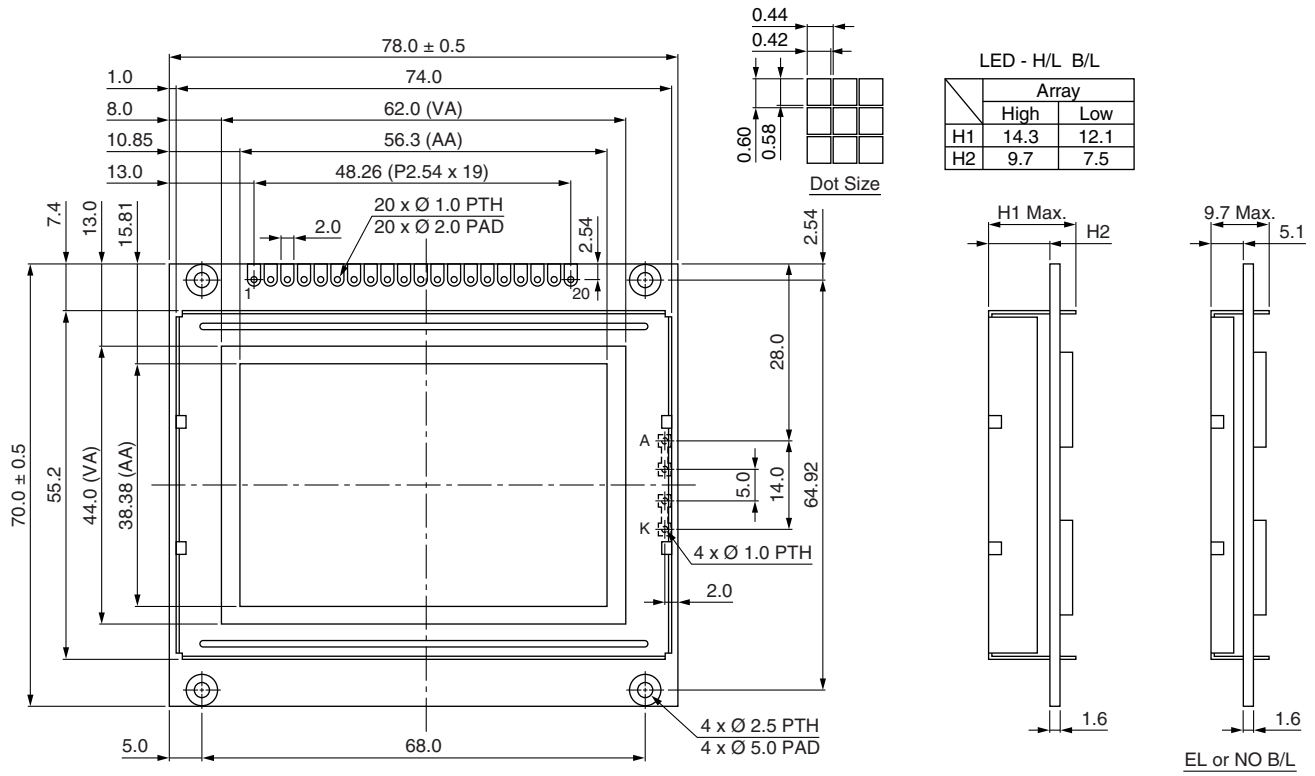

For technical questions, contact: displays@vishay.com

THIS DOCUMENT IS SUBJECT TO CHANGE WITHOUT NOTICE. THE PRODUCTS DESCRIBED HEREIN AND THIS DOCUMENT ARE SUBJECT TO SPECIFIC DISCLAIMERS, SET FORTH AT www.vishay.com/doc?91000

Disclaimer

ALL PRODUCT, PRODUCT SPECIFICATIONS AND DATA ARE SUBJECT TO CHANGE WITHOUT NOTICE TO IMPROVE RELIABILITY, FUNCTION OR DESIGN OR OTHERWISE.

Vishay Intertechnology, Inc., its affiliates, agents, and employees, and all persons acting on its or their behalf (collectively, “Vishay”), disclaim any and all liability for any errors, inaccuracies or incompleteness contained in any datasheet or in any other disclosure relating to any product.

Vishay makes no warranty, representation or guarantee regarding the suitability of the products for any particular purpose or the continuing production of any product. To the maximum extent permitted by applicable law, Vishay disclaims (i) any and all liability arising out of the application or use of any product, (ii) any and all liability, including without limitation special, consequential or incidental damages, and (iii) any and all implied warranties, including warranties of fitness for particular purpose, non-infringement and merchantability.

Statements regarding the suitability of products for certain types of applications are based on Vishay's knowledge of typical requirements that are often placed on Vishay products in generic applications. Such statements are not binding statements about the suitability of products for a particular application. It is the customer's responsibility to validate that a particular product with the properties described in the product specification is suitable for use in a particular application. Parameters provided in datasheets and / or specifications may vary in different applications and performance may vary over time. All operating parameters, including typical parameters, must be validated for each customer application by the customer's technical experts. Product specifications do not expand or otherwise modify Vishay's terms and conditions of purchase, including but not limited to the warranty expressed therein.

Hyperlinks included in this datasheet may direct users to third-party websites. These links are provided as a convenience and for informational purposes only. Inclusion of these hyperlinks does not constitute an endorsement or an approval by Vishay of any of the products, services or opinions of the corporation, organization or individual associated with the third-party website. Vishay disclaims any and all liability and bears no responsibility for the accuracy, legality or content of the third-party website or for that of subsequent links.

Except as expressly indicated in writing, Vishay products are not designed for use in medical, life-saving, or life-sustaining applications or for any other application in which the failure of the Vishay product could result in personal injury or death. Customers using or selling Vishay products not expressly indicated for use in such applications do so at their own risk. Please contact authorized Vishay personnel to obtain written terms and conditions regarding products designed for such applications.

No license, express or implied, by estoppel or otherwise, to any intellectual property rights is granted by this document or by any conduct of Vishay. Product names and markings noted herein may be trademarks of their respective owners.

© 2024 VISHAY INTERTECHNOLOGY, INC. ALL RIGHTS RESERVED