PowerPAK® 8 x 8 Carrier Tape

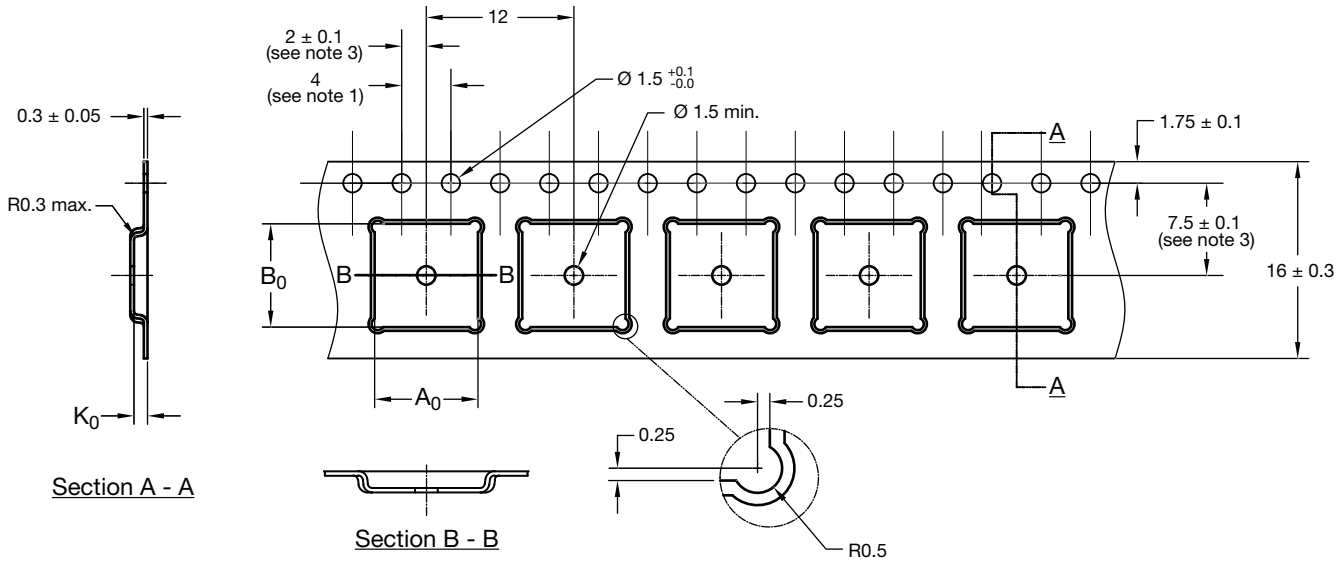

Version	A_0	B_0	K_0	Reel Dia	Length	Comment
- 1	8.4	8.4	1.4	-	-	

Notes

1. 10 sprocket hole pitch cumulative tolerance ± 0.2 mm.
2. Camber in compliance with EIA 481.
3. Pocket position relative to sprocket hole measured as true position of pocket, not pocket hole.
4. All sizes in mm unless specified.
5. Material: PS and C, surface resistivity $<10^{12} \geq 10^{5}$ Ω/square.
6. Tolerance - unless noted 1PL ± 0.2 mm, 2PL ± 0.1 mm

QUANTITY PER REEL	
T1	3000

ECN: T15-0578-Rev. B, 12-Oct-15
DWG: 93-5334-X

For technical questions, contact: powerictechsupport@vishay.com
THIS DOCUMENT IS SUBJECT TO CHANGE WITHOUT NOTICE. THE PRODUCTS DESCRIBED HEREIN AND THIS DOCUMENT ARE SUBJECT TO SPECIFIC DISCLAIMERS, SET FORTH AT www.vishay.com/doc?91000