Low Voltage, Dual Supply, Low R_{ON}, Quad SPST Analog Switches

DESCRIPTION

The DG9424, DG9425, DG9426 are low voltage precision monolithic quad single-pole-single-throw analog switches.

Using BiCMOS wafer fabrication technology allows the DG9424, DG9425, DG9426 to operate on single and dual supplies. Single supply voltage ranges from 3 V to 12 V while dual supply operation is recommended with ± 3 V to ± 6 V.

Combining high speed (t_{ON}: 42 ns), flat $R_{DS(on)}$ over the analog signal range (Ω), minimal insertion lose (-3 dB at 190 MHz), and excellent crosstalk and off-isolation performance, the DG9424, DG9425, DG9426 are ideally suited for audio and video signal switching.

The DG9424 and DG9425 respond to opposite control logic as shown in the truth table. The DG9426 has two normally open and two normally closed switches.

FEATURES

- 2.7 V thru 12 V single supply or ± 3 thru ± 6 dual supply
- On-resistance - $R_{DS(on)}$: 1.7 Ω
- Fast switching - t_{ON}: 42 ns
  - t_{OFF}: 28 ns
- TTL, CMOS compatible
- Low leakage: 0.2 nA
- 2000 V ESD protection

BENEFITS

- Widest dynamic range
- Low signal errors and distortion
- Break-before-make switching action
- Simple interfacing

APPLICATIONS

- Automatic test equipment
- Data acquisition systems
- Communication systems
- ADC systems
- xDSL and PBX / PABX
- Audio signal routing

FUNCTIONAL BLOCK DIAGRAM AND PIN CONFIGURATION

DG9424/DG9425

TSSOP

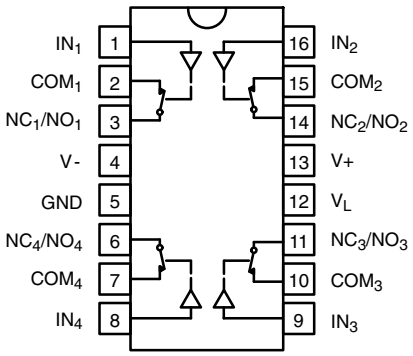

Top View

TRUTH TABLE		
LOGIC	DG9424	DG9425
0	OFF	ON
1	ON	OFF

For technical questions, contact: analogswitchtechsupport@vishay.com

THIS DOCUMENT IS SUBJECT TO CHANGE WITHOUT NOTICE. THE PRODUCTS DESCRIBED HEREIN AND THIS DOCUMENT ARE SUBJECT TO SPECIFIC DISCLAIMERS, SET FORTH AT www.vishay.com/doc?91000

FUNCTIONAL BLOCK DIAGRAM AND PIN CONFIGURATION

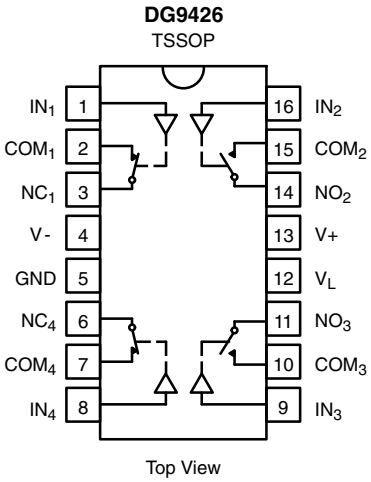

TRUTH TABLE		
LOGIC	SW_1, SW_4	SW_2, SW_3
0	ON	OFF
1	OFF	ON

ORDERING INFORMATION		
TEMP. RANGE	PACKAGE	PART NUMBER
-40 °C to +85 °C	16-Pin TSSOP	DG9424DQ-T1-E3
		DG9425DQ-T1-E3
		DG9426DQ-T1-E3

ABSOLUTE MAXIMUM RATINGS			
PARAMETER		LIMIT	UNIT
V+ to V-		-0.3 to +13	V
GND to V-		7	
V_L		(GND - 0.3) to (V+) + 0.3	
IN, COM, NC, NO [a]		(V-) - 0.3 to (V+) + 0.3	
Continuous Current (NO, NC, COM Pins)		100	mA
Peak Current, S or D (Pulsed 1 ms, 10 % Duty Cycle)		200	
Storage Temperature		-65 to +150	°C
Power Dissipation (Package) [b]	16-Pin TSSOP [c]	450	mW
Thermal Resistance [b]		178	°C/W

Notes

a. Signals on NC, NO, COM or IN exceeding V+ or V- will be clamped by internal diodes. Limit forward diode current to maximum current ratings.
b. All leads welded or soldered to PC board.
c. Derate 7 mW/°C above 25 °C.

THIS DOCUMENT IS SUBJECT TO CHANGE WITHOUT NOTICE. THE PRODUCTS DESCRIBED HEREIN AND THIS DOCUMENT ARE SUBJECT TO SPECIFIC DISCLAIMERS, SET FORTH AT www.vishay.com/doc?91000

SPECIFICATIONS [a] Single Supply 12 V							
PARAMETER	**SYMBOL**	**TEST CONDITIONS UNLESS OTHERWISE SPECIFIED V+ = 12 V, V- = 0 V V_L = 5 V, V_{IN} = 2.4 V, 0.8 V [f]**	**TEMP. [b]**	**LIMITS -40 °C to +85 °C**			**UNIT**
				MIN. [d]	**TYP. [c]**	**MAX. [d]**	
Analog Switch							
Analog Signal Range [e]	V_{ANALOG}		Full	0	-	12	V
On-Resistance	R_{ON}	V+ = 10.8 V, V- = 0 V I_{NO}, I_{NC} = 50 mA, V_{COM} = 2 V / 9 V	Room	-	1.8	3	Ω
			Full	-	-	4	
Digital Control							
Input Current	I_{INL} or I_{INH}		Full	-1	0.01	1	µA
Dynamic Characteristics							
Turn-On Time [e]	t_{ON}	R_L = 300 Ω, C_L = 35 pF V_{NO}, V_{NC} = 5 V, see fig. 2	Room	-	42	57	ns
			Full	-	-	65	
Turn-Off Time [e]	t_{OFF}		Room	-	28	42	
			Full	-	-	44	
Break-Before-Make Time Delay [e]	t_D	DG9426 only, V_{NO}, V_{NC} = 5 V R_L = 300 Ω, C_L = 35 pF	Room	2	-	-	
Charge Injection [e]	Q_{INJ}	V_g = 0 V, R_g = 0 Ω, C_L = 1 nF	Room	-	38	-	pC
Off-Isolation [e]	OIRR	R_L = 50 Ω, C_L = 5 pF f = 1 MHz	Room	-	-56	-	dB
Channel-to-Channel Crosstalk [e]	X_{TALK}		Room	-	-77	-	
NO, NC Off Capacitance [e]	$C_{NO(off)}$	f = 1 MHz	Room	-	49	-	pF
	$C_{NC(off)}$						
COM Off Capacitance [e]	$C_{COM(off)}$		Room	-	37	-	
Channel On Capacitance [e]	$C_{COM(on)}$		Room	-	89	-	
Power Supplies							
Positive Supply Current	I+	V_{IN} = 0 or V_L	Room	-	0.02	1	µA
			Full	-	-	5	
Negative Supply Current	I-		Room	-1	-0.002	-	
			Full	-5	-	-	
Logic Supply Current	I_L		Room	-	0.002	1	
			Full	-	-	5	
Ground Current	I_{GND}		Room	-1	-0.002	-	
			Full	-5	-	-	

For technical questions, contact: analogswitchtechsupport@vishay.com
THIS DOCUMENT IS SUBJECT TO CHANGE WITHOUT NOTICE. THE PRODUCTS DESCRIBED HEREIN AND THIS DOCUMENT ARE SUBJECT TO SPECIFIC DISCLAIMERS, SET FORTH AT www.vishay.com/doc?91000

SPECIFICATIONS [a] Dual Supply ± 5 V							
PARAMETER	**SYMBOL**	**TEST CONDITIONS UNLESS OTHERWISE SPECIFIED V+ = 5 V, V- = 5 V V_L = 5 V, V_{IN} = 2.4 V, 0.8 V** [f]	**TEMP.**[b]	**LIMITS -40 °C to +85 °C**			**UNIT**
				MIN. [d]	**TYP.** [c]	**MAX.** [d]	
Analog Switch							
Analog Signal Range [e]	V_{ANALOG}		Full	-5		5	V
On-Resistance	R_{ON}	V+ = 4.5 V, V- = -4.5 V I_{NO}, I_{NC} = 50 mA, V_{NO}, V_{COM} = ± 3.5 V	Room	-	2	3.3	Ω
			Full	-	-	4.3	
Switch Off Leakage Current	$I_{NO(off)}$ $I_{NC(off)}$	V+ = 5.5 V, V- = -5.5 V V_{COM} = ± 4.5 V, V_{NO}, V_{NC} = ± 4.5 V	Room	-1	-	1	nA
			Full	-10	-	10	
	$I_{COM(off)}$		Room	-1	-	1	
			Full	-10	-	10	
Channel On Leakage Current	$I_{COM(on)}$	V+ = 5.5 V, V- = -5.5 V, V_{NO}, V_{NC} = V_{COM} = ± 4.5 V	Room	-1	-	1	
			Full	-10	-	10	
Digital Control							
Input Current [a]	I_{INL} or I_{INH}		Full	-1	0.05	1	µA
Dynamic Characteristics							
Turn-On Time [e]	t_{ON}	R_L = 300 Ω, C_L = 35 pF V_{NO}, V_{NC} = ± 3.5 V, see fig. 2	Room	-	48	67	ns
			Full	-	-	81	
Turn-Off Time [e]	t_{OFF}		Room	-	34	57	
			Full	-	-	67	
Break-Before-Make Time Delay [e]	t_D	DG9426 only, V_{NO}, V_{NC} = 3.5 V R_L = 300 Ω, C_L = 35 pF	Room	2	-	-	
Charge Injection [e]	Q_{INJ}	V_g = 0 V, R_g = 0 Ω, C_L = 1 nF	Room	-	112	-	pC
Off Isolation [e]	OIRR	R_L = 50 Ω, C_L = 5 pF, f = 1 MHz	Room	-	-56	-	dB
Channel-to-Channel Crosstalk [e]	X_{TALK}		Room	-	-82	-	
Source Off Capacitance [e]	$C_{NO(off)}$ $C_{NC(off)}$	f = 1 MHz	Room	-	38	-	pF
Drain Off Capacitance [e]	$C_{COM(off)}$		Room	-	38	-	
Channel On Capacitance [e]	$C_{COM(on)}$		Room	-	89	-	
Power Supplies							
Positive Supply Current [e]	I+	V_{IN} = 0 or V_L	Room	-	0.03	1	µA
			Full	-	-	5	
Negative Supply Current [e]	I-		Room	-1	-0.002	-	
			Full	-5	-	-	
Logic Supply Current [e]	I_L		Room	-	0.002	1	
			Full	-	-	5	
Ground Current [e]	I_{GND}		Room	-1	-0.002	-	
			Full	-5	-	-	

THIS DOCUMENT IS SUBJECT TO CHANGE WITHOUT NOTICE. THE PRODUCTS DESCRIBED HEREIN AND THIS DOCUMENT ARE SUBJECT TO SPECIFIC DISCLAIMERS, SET FORTH AT www.vishay.com/doc?91000

SPECIFICATIONS [a] Single Supply 5 V							
PARAMETER	**SYMBOL**	**TEST CONDITIONS UNLESS OTHERWISE SPECIFIED V+ = 5 V, V- = 0 V V_L = 5 V, V_{IN} = 2.4 V, 0.8 V [f]**	**TEMP.** [b]	**LIMITS -40 °C to +85 °C**			**UNIT**
				MIN. [d]	**TYP.** [c]	**MAX.** [d]	
Analog Switch							
Analog Signal Range [e]	V_{ANALOG}		Full	-	-	5	V
On-Resistance [e]	R_{ON}	V+ = 4.5 V, I_{NO}, I_{NC} = 50 mA, VCOM = 1 V, 3.5 V	Room	-	3.4	4.8	Ω
			Full	-	-	5.8	
Dynamic Characteristics							
Turn-On Time [e]	t_{ON}	R_L = 300 Ω, C_L = 35 pF V_{NO}, V_{NC} = 3.5 V, see fig. 2	Room	-	71	86	ns
			Hot	-	-	106	
Turn-Off Time [e]	t_{OFF}		Room	-	37	51	
			Hot	-	-	56	
Break-Before-Make Time Delay [e]	t_D	DG9426 only, V_{NO}, V_{NC} = 3.5 V R_L = 300 Ω, C_L = 35 pF	Room	5	-	-	
Charge Injection [e]	Q_{INJ}	V_g = 0 V, R_g = 0 Ω, C_L = 1 nF	Room	-	10	-	pC
Power Supplies							
Positive Supply Current [e]	I+	V_{IN} = 0 or V_L	Room	-	0.02	1	µA
			Hot	-	-	5	
Negative Supply Current [e]	I-		Room	-1	-0.002	-	
			Hot	-5	-	-	
Logic Supply Current [e]	I_L		Room	-	0.002	1	
			Hot	-	-	5	
Ground Current [e]	I_{GND}		Room	-1	-0.002	-	
			Hot	-5	-	-	

For technical questions, contact: analogswitchtechsupport@vishay.com
THIS DOCUMENT IS SUBJECT TO CHANGE WITHOUT NOTICE. THE PRODUCTS DESCRIBED HEREIN AND THIS DOCUMENT ARE SUBJECT TO SPECIFIC DISCLAIMERS, SET FORTH AT www.vishay.com/doc?91000

SPECIFICATIONS [a] Single Supply 3 V							
PARAMETER	**SYMBOL**	**TEST CONDITIONS UNLESS OTHERWISE SPECIFIED V+ = 3 V, V- = 0 V V_L = 3 V, V_{IN} = 2.4 V, 0.4 V** [f]	**TEMP.** [b]	**LIMITS -40 °C to +85 °C**			**UNIT**
				MIN. [d]	**TYP.** [c]	**MAX.** [d]	
Analog Switch							
Analog Signal Range [e]	V_{ANALOG}		Full	0	-	3	V
On-Resistance	R_{ON}	V+ = 2.7 V, V- = 0 V I_{NO}, I_{NC} = 5 mA, V_{COM} = 0.5 V, 2.2 V	Room	-	8	13.8	Ω
			Full	-	-	15.1	
Switch Off Leakage Current [a]	$I_{NO(off)}$	V+ = 3.3 V, V- = 0 V V_{COM} = 0.3 V, 3 V, V_{NO}, V_{NC} = 3, 0.3 V	Room	-1	-	1	nA
	$I_{NC(off)}$		Full	-10	-	10	
	$I_{COM(off)}$		Room	-1	-	1	
			Full	-10	-	10	
Channel On Leakage Current [a]	$I_{COM(on)}$	V+ = 3.3 V, V- = 0 V, V_{NO}, V_{NC} = V_{COM} = 0.3 V, 3 V	Room	-1	-	1	
			Full	-10	-	10	
Digital Control [e]							
Input Current	I_{INL} or I_{INH}		Full	-1	0.005	1	µA
Dynamic Characteristics							
Turn-On Time	t_{ON}	R_L = 300 Ω, C_L = 35 pF V_{NO}, V_{NC} = 1.5 V, see fig. 2	Room	-	140	163	ns
			Full	-	-	193	
Turn-Off Time	t_{OFF}		Room	-	65	80	
			Full	-	-	89	
Break-Before-Make Time Delay	t_D	DG9426 only, V_{NO}, V_{NC} = 1.5 V R_L = 300 Ω, C_L = 35 pF	Room	5			
Charge Injection [e]	Q_{INJ}	V_g = 0 V, R_g = 0 Ω, C_L = 1 nF	Room	-	15	-	pC
Off Isolation [e]	OIRR	R_L = 50 Ω, C_L = 5 pF f = 1 MHz	Room	-	-56	-	dB
Channel-to-Channel Crosstalk [e]	X_{TALK}		Room	-	-80	-	
Source Off Capacitance [e]	$C_{NO(off)}$	f = 1 MHz	Room	-	53	-	pF
	$C_{NC(off)}$						
Drain Off Capacitance [e]	$C_{COM(off)}$		Room	-	42	-	
Channel On Capacitance [e]	$C_{COM(on)}$		Room	-	92	-	

Notes

a. Leakage parameters are guaranteed by worst case test conditions and not subject to production test.
b. Room = 25 °C, Full = As determined by the operating temperature suffix.
c. Typical values are for DESIGN AID ONLY, not guaranteed nor subject to production testing.
d. The algebraic convention whereby the most negative value is a minimum and the most positive a maximum, is used in this datasheet.
e. Guaranteed by design, not subject to production test.
f. V_{IN} = Input voltage to perform proper function.

Stresses beyond those listed under "Absolute Maximum Ratings" may cause permanent damage to the device. These are stress ratings only, and functional operation of the device at these or any other conditions beyond those indicated in the operational sections of the specifications is not implied. Exposure to absolute maximum rating conditions for extended periods may affect device reliability.

THIS DOCUMENT IS SUBJECT TO CHANGE WITHOUT NOTICE. THE PRODUCTS DESCRIBED HEREIN AND THIS DOCUMENT ARE SUBJECT TO SPECIFIC DISCLAIMERS, SET FORTH AT www.vishay.com/doc?91000

TYPICAL CHARACTERISTICS (25 °C, unless otherwise noted)

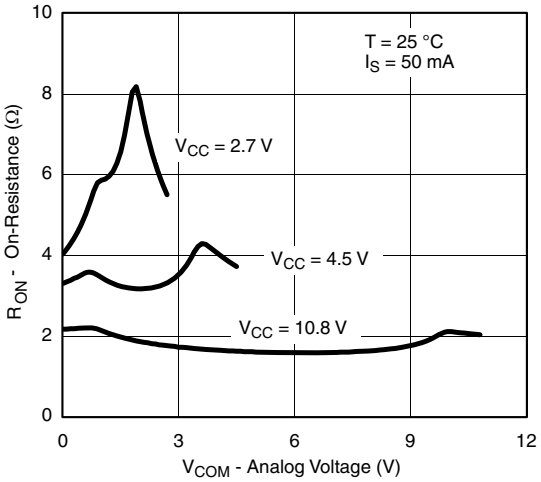

R_{ON} vs. V_{COM} and Supply Voltage

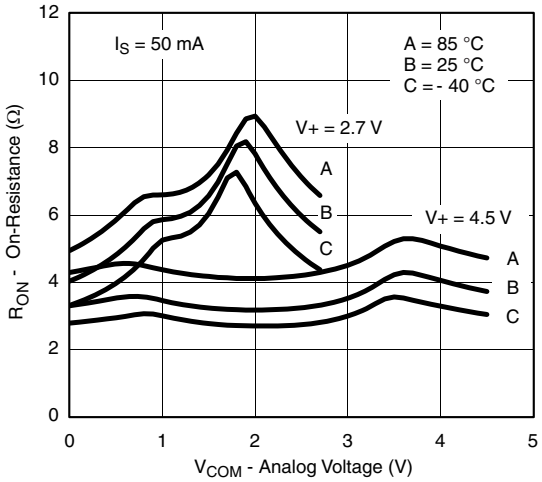

R_{ON} vs. Analog Voltage and Temperature

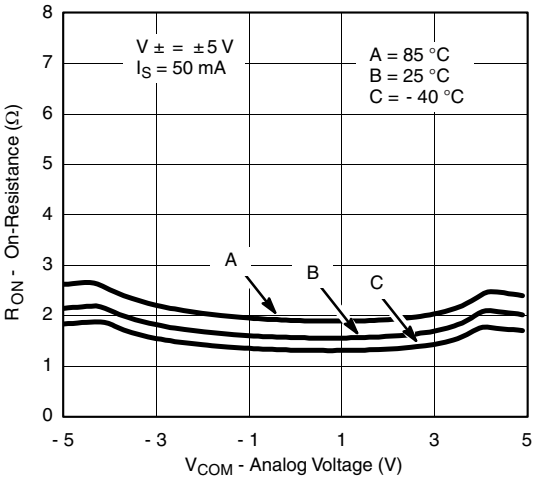

R_{ON} vs. Analog Voltage and Temperature

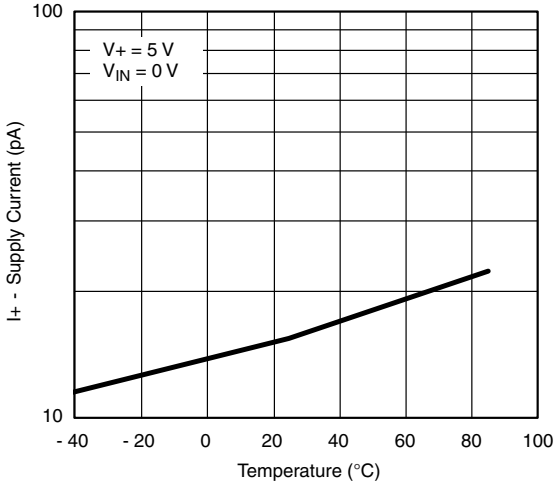

Supply Current vs. Temperature

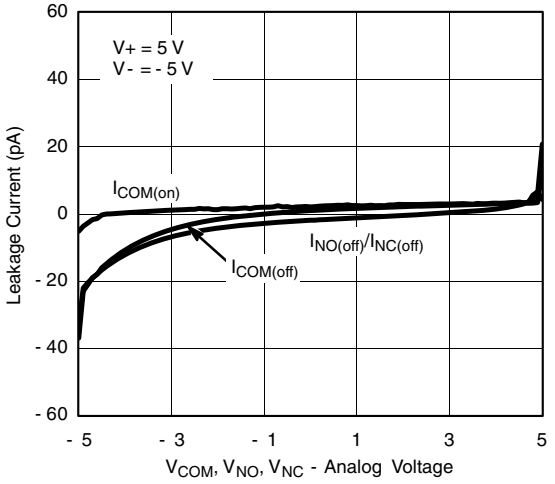

Leakage Current vs. Analog Voltage

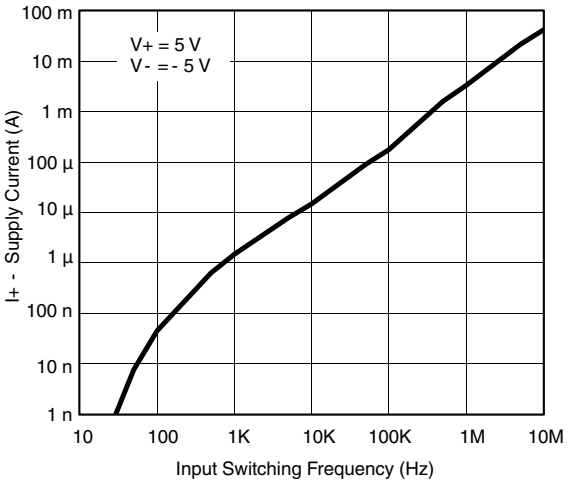

Switching Current vs. Input Switching Frequency

For technical questions, contact: analogswitchtechsupport@vishay.com
THIS DOCUMENT IS SUBJECT TO CHANGE WITHOUT NOTICE. THE PRODUCTS DESCRIBED HEREIN AND THIS DOCUMENT ARE SUBJECT TO SPECIFIC DISCLAIMERS, SET FORTH AT www.vishay.com/doc?91000

TYPICAL CHARACTERISTICS (25 °C, unless otherwise noted)

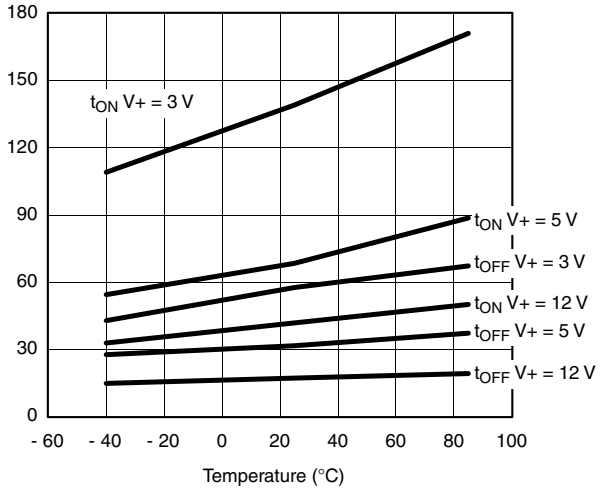

Switching Time vs. Temperature and Single Supply Voltage

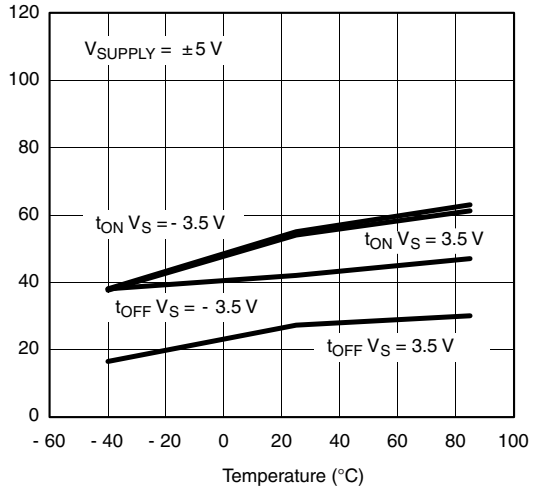

Switching Time vs. Temperature and Dual Supply Voltage

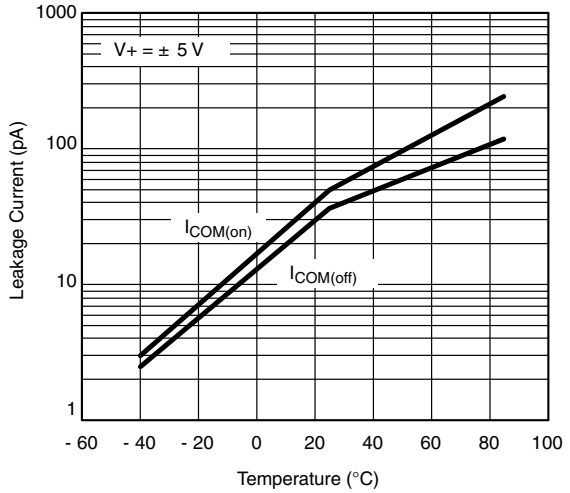

Leakage Current vs. Temperature

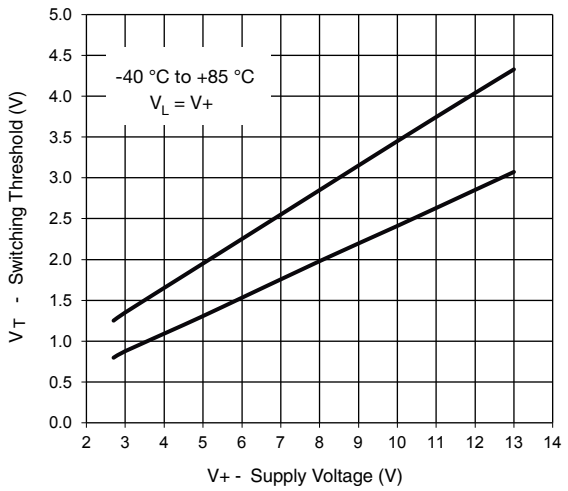

Switching Threshold vs. Supply Voltage

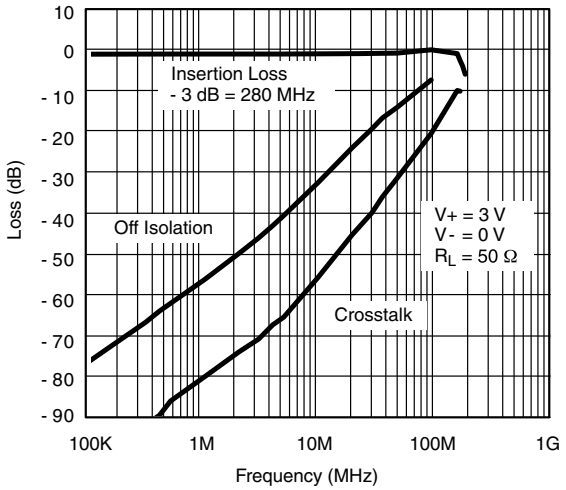

Insertion Loss, Off Isolation and Crosstalk vs. Frequency

For technical questions, contact: analogswitchtechsupport@vishay.com
THIS DOCUMENT IS SUBJECT TO CHANGE WITHOUT NOTICE. THE PRODUCTS DESCRIBED HEREIN AND THIS DOCUMENT ARE SUBJECT TO SPECIFIC DISCLAIMERS, SET FORTH AT www.vishay.com/doc?91000

SCHEMATIC DIAGRAM (typical channel)

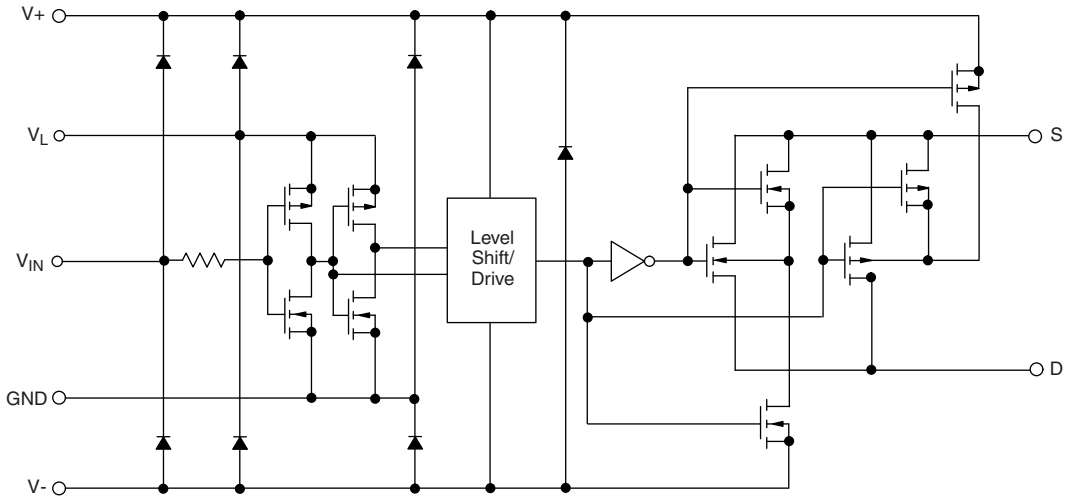

Fig. 1

TEST CIRCUITS

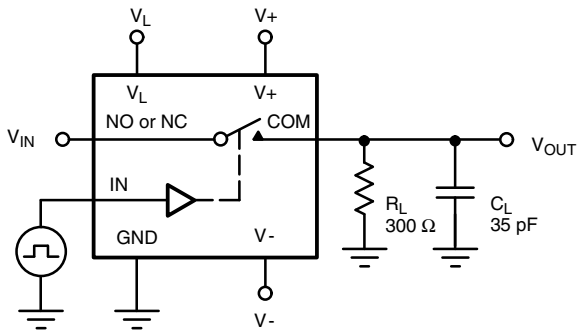

C_L (includes fixture and stray capacitance)

$$V_{OUT} = V_{IN} \frac{R_L}{R_L + r_{ON}}$$

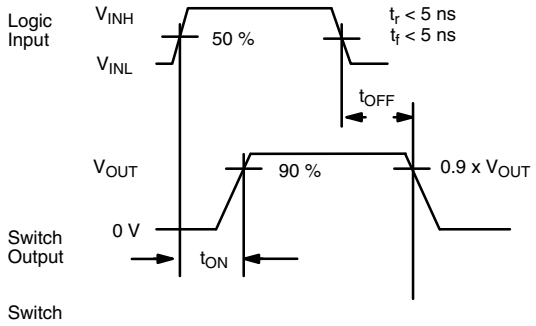

Note: Logic input waveform is inverted for switches that have the opposite logic sense control

Fig. 2 - Switching Time

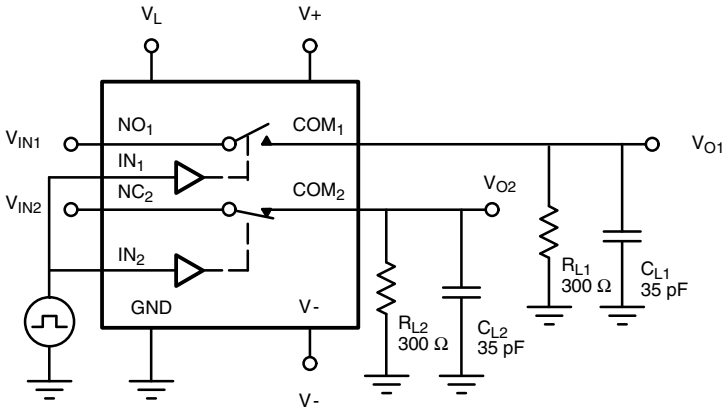

C_L (includes fixture and stray capacitance)

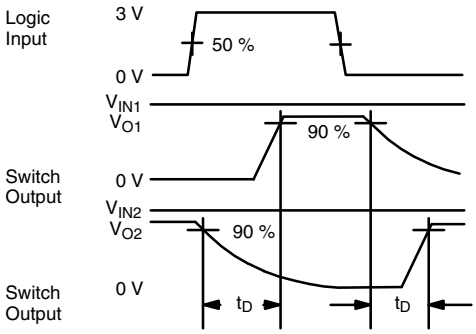

Fig. 3 - Break-Before-Make (DG9426)

For technical questions, contact: analogswitchtechsupport@vishay.com
THIS DOCUMENT IS SUBJECT TO CHANGE WITHOUT NOTICE. THE PRODUCTS DESCRIBED HEREIN AND THIS DOCUMENT ARE SUBJECT TO SPECIFIC DISCLAIMERS, SET FORTH AT www.vishay.com/doc?91000

TEST CIRCUITS

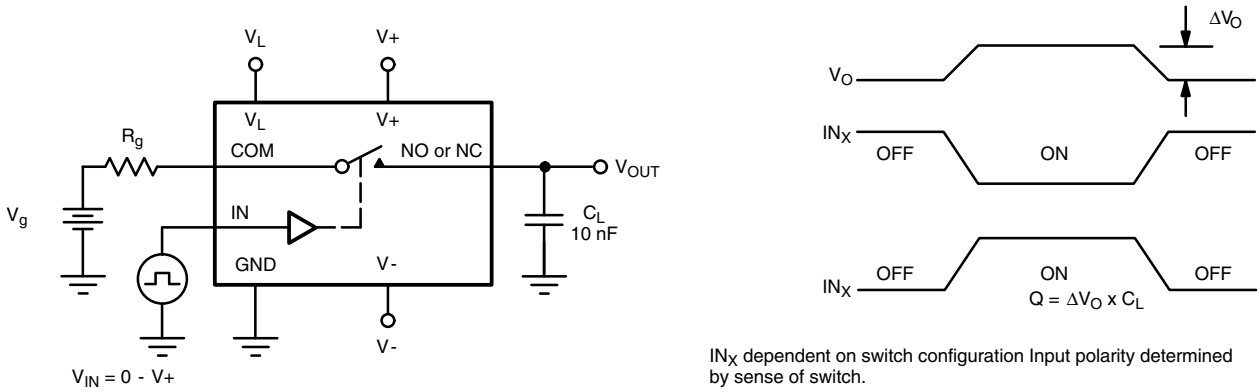

Fig. 4 - Charge Injection

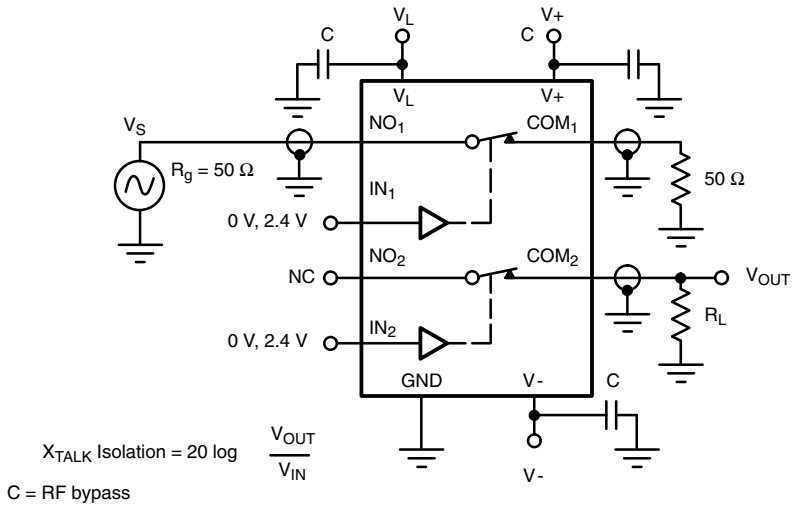

Fig. 5 - Crosstalk

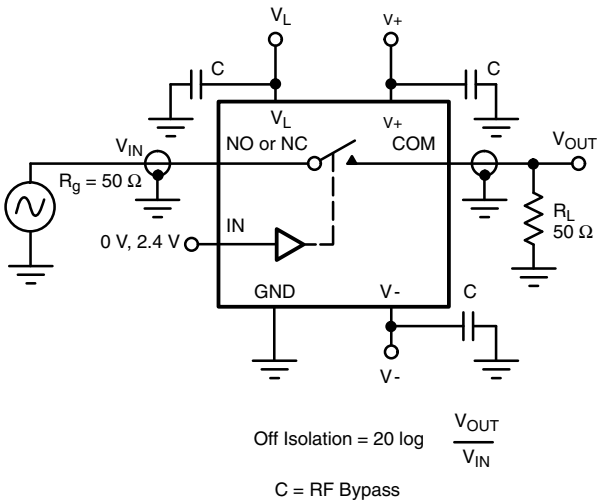

Fig. 6 - Off-Isolation

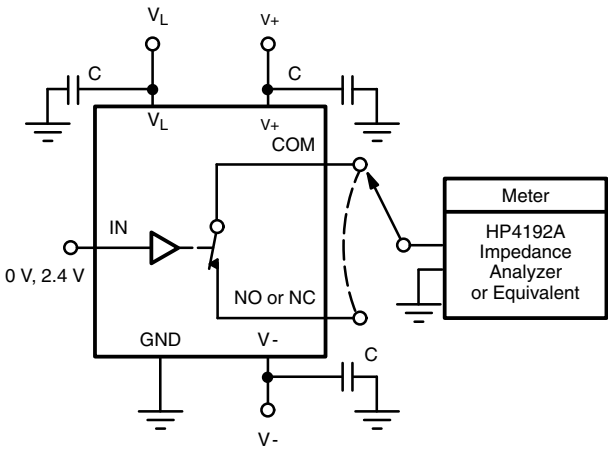

Fig. 7 - Source / Drain Capacitances

Vishay Siliconix maintains worldwide manufacturing capability. Products may be manufactured at one of several qualified locations. Reliability data for Silicon Technology and Package Reliability represent a composite of all qualified locations. For related documents such as package/tape drawings, part marking, and reliability data, see www.vishay.com/ppg?71807.

THIS DOCUMENT IS SUBJECT TO CHANGE WITHOUT NOTICE. THE PRODUCTS DESCRIBED HEREIN AND THIS DOCUMENT ARE SUBJECT TO SPECIFIC DISCLAIMERS, SET FORTH AT www.vishay.com/doc?91000

TSSOP: 16-LEAD

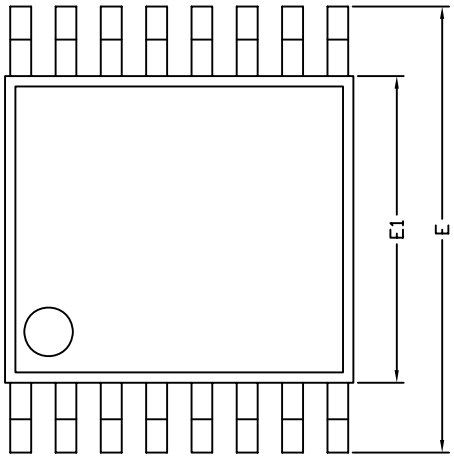

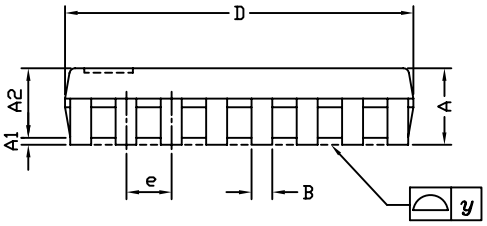

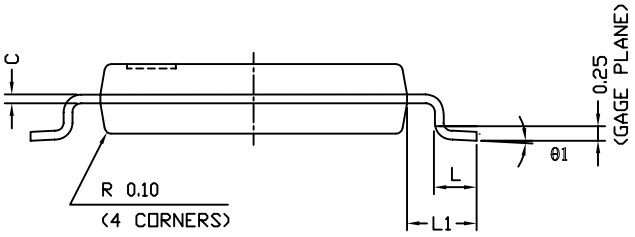

Symbols	DIMENSIONS IN MILLIMETERS		
	Min	Nom	Max
A	-	1.10	1.20
A1	0.05	0.10	0.15
A2	-	1.00	1.05
B	0.22	0.28	0.38
C	-	0.127	-
D	4.90	5.00	5.10
E	6.10	6.40	6.70
E1	4.30	4.40	4.50
e	-	0.65	-
L	0.50	0.60	0.70
L1	0.90	1.00	1.10
y	-	-	0.10
θ1	0°	3°	6°
ECN: S-61920-Rev. D, 23-Oct-06 DWG: 5624			

RECOMMENDED MINIMUM PAD FOR TSSOP-16

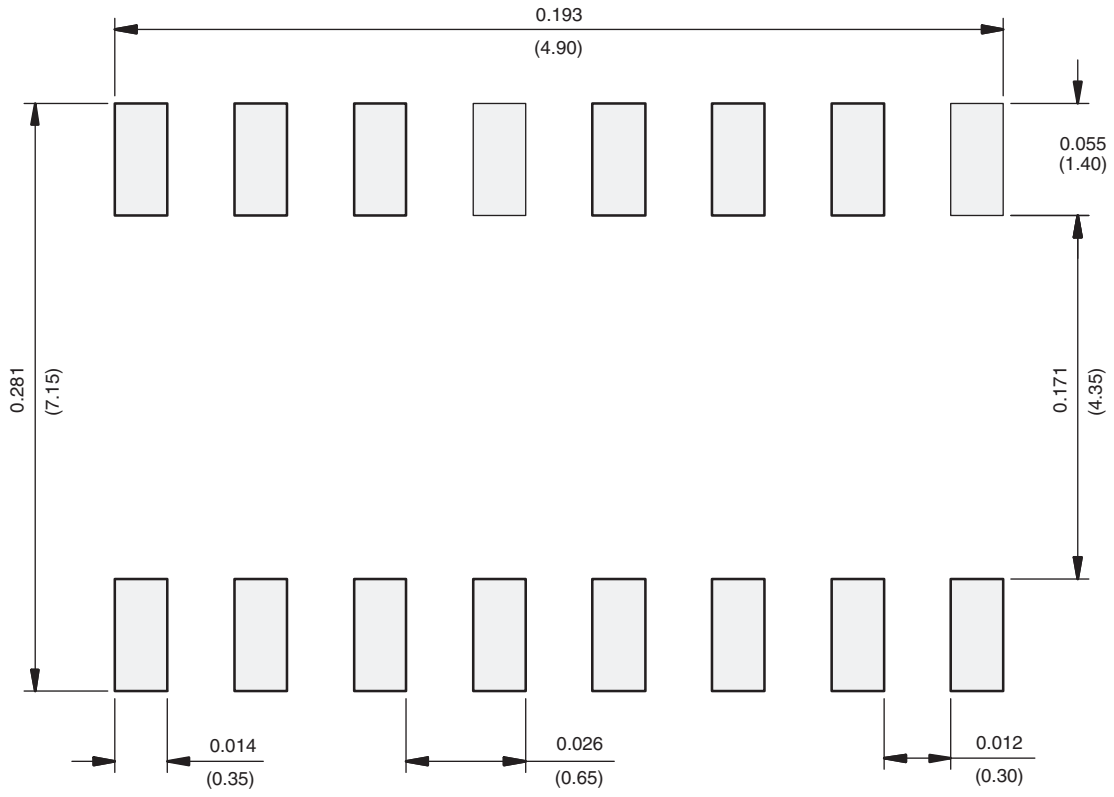

Recommended Minimum Pads
Dimensions in inches (mm)

THIS DOCUMENT IS SUBJECT TO CHANGE WITHOUT NOTICE. THE PRODUCTS DESCRIBED HEREIN AND THIS DOCUMENT ARE SUBJECT TO SPECIFIC DISCLAIMERS, SET FORTH AT www.vishay.com/doc?91000

Disclaimer

ALL PRODUCT, PRODUCT SPECIFICATIONS AND DATA ARE SUBJECT TO CHANGE WITHOUT NOTICE TO IMPROVE RELIABILITY, FUNCTION OR DESIGN OR OTHERWISE.

Vishay Intertechnology, Inc., its affiliates, agents, and employees, and all persons acting on its or their behalf (collectively, “Vishay”), disclaim any and all liability for any errors, inaccuracies or incompleteness contained in any datasheet or in any other disclosure relating to any product.

Vishay makes no warranty, representation or guarantee regarding the suitability of the products for any particular purpose or the continuing production of any product. To the maximum extent permitted by applicable law, Vishay disclaims (i) any and all liability arising out of the application or use of any product, (ii) any and all liability, including without limitation special, consequential or incidental damages, and (iii) any and all implied warranties, including warranties of fitness for particular purpose, non-infringement and merchantability.

Statements regarding the suitability of products for certain types of applications are based on Vishay's knowledge of typical requirements that are often placed on Vishay products in generic applications. Such statements are not binding statements about the suitability of products for a particular application. It is the customer's responsibility to validate that a particular product with the properties described in the product specification is suitable for use in a particular application. Parameters provided in datasheets and / or specifications may vary in different applications and performance may vary over time. All operating parameters, including typical parameters, must be validated for each customer application by the customer's technical experts. Product specifications do not expand or otherwise modify Vishay's terms and conditions of purchase, including but not limited to the warranty expressed therein.

Hyperlinks included in this datasheet may direct users to third-party websites. These links are provided as a convenience and for informational purposes only. Inclusion of these hyperlinks does not constitute an endorsement or an approval by Vishay of any of the products, services or opinions of the corporation, organization or individual associated with the third-party website. Vishay disclaims any and all liability and bears no responsibility for the accuracy, legality or content of the third-party website or for that of subsequent links.

Except as expressly indicated in writing, Vishay products are not designed for use in medical, life-saving, or life-sustaining applications or for any other application in which the failure of the Vishay product could result in personal injury or death. Customers using or selling Vishay products not expressly indicated for use in such applications do so at their own risk. Please contact authorized Vishay personnel to obtain written terms and conditions regarding products designed for such applications.

No license, express or implied, by estoppel or otherwise, to any intellectual property rights is granted by this document or by any conduct of Vishay. Product names and markings noted herein may be trademarks of their respective owners.

© 2024 VISHAY INTERTECHNOLOGY, INC. ALL RIGHTS RESERVED