A Small Package Proximity Sensor With a VCSEL, Low Idle Current, I²C Interface, and Smart Dual Slave Address

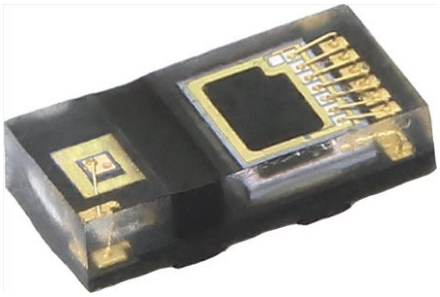

LINKS TO ADDITIONAL RESOURCES

3D Models
Application Notes

DESCRIPTION

The VCNL36828P is a fully integrated proximity sensor. It combines a vertical-cavity surface-emitting laser (VCSEL), photodiode, and application-specific integrated circuit (ASIC) within a single package. The VCNL36828P has been developed for proximity detection applications that require a dual slave address, low power consumption, small package size, small window size, and short range operation. In addition, given the typical rated supply voltage of 1.8 V to reduce power consumption, the sensor is intended for battery-powered applications.

FEATURES

- Package type: surface-mount
- Dimensions (L x W x H in mm): 2.0 x 1.0 x 0.5
- Integrated modules: vertical-cavity surface-emitting laser (VCSEL), photodiode, and application-specific integrated circuit (ASIC)
- 1.8 V rated power supply and I²C bus
- Low power consumption with 5 μA idle current
- A small package allows a design with a small window size
- Smart dual I²C slave address in one package
- Immunity to red glow (940 nm VCSEL)
- Programmable I_{VCSEL} sink current
- Intelligent cancellation to reduce cross talk phenomenon
- Smart persistence scheme to reduce measurement response time
- Interrupt functionality
- Material categorization: for definitions of compliance please see www.vishay.com/doc?99912

Pb-free
e4
RoHS COMPLIANT
HALOGEN FREE
GREEN (5-2008)

APPLICATIONS

- Smartphones and true wireless stereo (TWS) earbuds
- VR / AR headsets and smart glasses
- Smartwatches
- Touchless button / dispensing

PRODUCT SUMMARY

PART NUMBER	OPERATING RANGE (mm)	OPERATING VOLTAGE RANGE (V)	I²C BUS VOLTAGE RANGE (V)	MAX. VCSEL DRIVING CURRENT (mA)	OUTPUT CODE	ADC RESOLUTION PROXIMITY / AMBIENT LIGHT
VCNL36828P	200	1.65 to 2.00	1.2 to 3.6	20	12 bit / 16 bit, I²C	16 bit / -

ORDERING INFORMATION

ORDERING CODE	PACKAGING	VOLUME [1]	REMARKS
VCNL36828P	Tape and reel	MOQ: 5000 pcs, 5000 pcs/reel	2.0 mm x 1.0 mm x 0.5 mm

Note

[1] MOQ: minimum order quantity

For technical questions, contact: sensorstechsupport@vishay.com
THIS DOCUMENT IS SUBJECT TO CHANGE WITHOUT NOTICE. THE PRODUCTS DESCRIBED HEREIN AND THIS DOCUMENT ARE SUBJECT TO SPECIFIC DISCLAIMERS, SET FORTH AT www.vishay.com/doc?91000

PIN DEFINITION

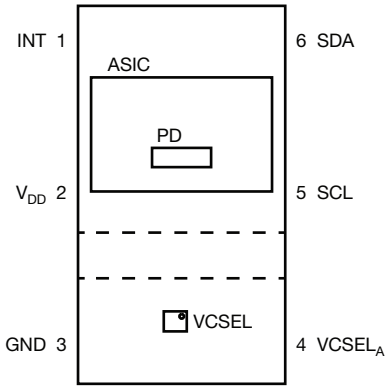

PIN DESCRIPTION			
PIN NUMBER	**PIN NAME**	**TYPE**	**DESCRIPTION**
1	INT	O (open drain)	Interrupt
2	V_{DD}	I	Supply voltage
3	GND	I	Ground
4	$VCSEL_A$	I	VCSEL anode
5	SCL [(1)]	I / O (open drain)	I^2C serial clock
6	SDA [(1)]	I / O (open drain)	I^2C serial data

Note

(1) Pin 5 (SCL) and pin 6 (SDA) can be swapped to change the slave address from 0x60 to 0x51; please refer to Table 1

ABSOLUTE MAXIMUM RATINGS (T_{amb} = 25 °C, unless otherwise specified)					
PARAMETER	**TEST CONDITION**	**SYMBOL**	**MIN.**	**MAX.**	**UNIT**
Supply voltage		V_{DD}	0	2	V
Ambient temperature range		T_{amb}	-40	+85	°C
Storage temperature range		T_{stg}	-40	+100	°C

For technical questions, contact: sensorstechsupport@vishay.com
THIS DOCUMENT IS SUBJECT TO CHANGE WITHOUT NOTICE. THE PRODUCTS DESCRIBED HEREIN AND THIS DOCUMENT ARE SUBJECT TO SPECIFIC DISCLAIMERS, SET FORTH AT www.vishay.com/doc?91000

BASIC CHARACTERISTICS (T_{amb} = 25 °C, unless otherwise specified)						
PARAMETER	**TEST CONDITION**	**SYMBOL**	**MIN.**	**TYP.**	**MAX.**	**UNIT**
ASIC						
Supply voltage		V_{DD}	1.65	1.80	2.00	V
Supply current [1]	Shutdown state; light condition = dark; V_{DD} = 1.8 V	I_{DD}	-	1	-	µA
	Idle state [2]; V_{DD} = 1.8 V		-	5	-	
	Active state [2]; V_{DD} = 1.8 V		-	330	-	
I^2C supply voltage		$V_{PULL\ UP}$	1.2	1.8	3.6	V
I^2C signal input, logic high	V_{DD} = 1.8 V	V_{IH}	1	-	-	V
I^2C signal input, logic low	V_{DD} = 1.8 V	V_{IL}	-	-	0.5	V
VCSEL						
Supply voltage of the VCSEL [3]		V_{VCSEL}	2.62	-	3.60	V
Forward voltage	I_F = 9 mA	V_F	-	1.92	-	V
Forward current		I_F	7	-	20	mA
Angle of half intensity		φ	-	± 4.5	-	°
Peak wavelength	I_F = 9 mA	λ_p	-	940	-	nm
Spectral bandwidth	I_F = 9 mA	Δλ	-	3	-	nm
PHOTODIODE						
Angle of half sensitivity	X-axis [4]	φ	-	± 60	-	°
	Y-axis [4]		-	± 45	-	
Peak sensitivity wavelength		λ_p	-	850	-	nm

Notes

(1) Actual current consumption depends on the register settings. Please refer to the application note on the current consumption

(2) Excluding VCSEL driving current

(3) V_{VCSEL} should at least match the minimum required supply voltage for the VCSEL $V_{VCSEL,\ min}$. Please refer to the $V_{VCSEL,\ min}$ table

(4) Cross section of the package

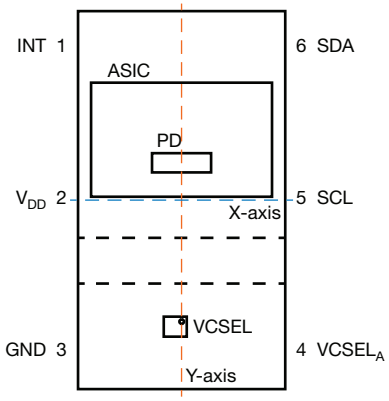

$V_{VCSEL,\ MIN.}$								
PS_CURRENT (I_F)	7 mA	9 mA	11 mA	12 mA	15 mA	17 mA	19 mA	20 mA
$V_{VCSEL,\ min.}$	2.62 V	2.74 V	2.86 V	2.91 V	3.08 V	3.19 V	3.3 V	3.36 V
$V_{VCSEL,\ max.}$	3.6 V							

THIS DOCUMENT IS SUBJECT TO CHANGE WITHOUT NOTICE. THE PRODUCTS DESCRIBED HEREIN AND THIS DOCUMENT ARE SUBJECT TO SPECIFIC DISCLAIMERS, SET FORTH AT www.vishay.com/doc?91000

LASER CLASS

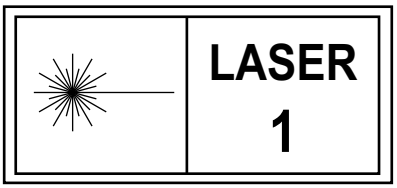

Note

- Product specification with IEC / EN 60825-1:2014 compliance and above label

BLOCK DIAGRAM

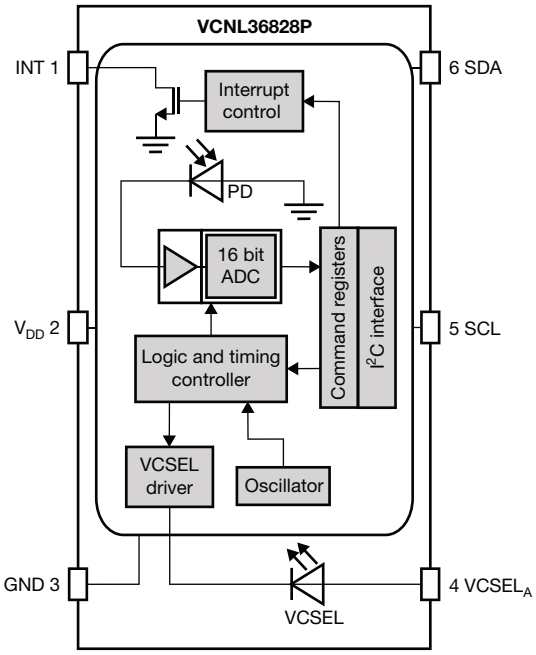

For technical questions, contact: sensorstechsupport@vishay.com
THIS DOCUMENT IS SUBJECT TO CHANGE WITHOUT NOTICE. THE PRODUCTS DESCRIBED HEREIN AND THIS DOCUMENT ARE SUBJECT TO SPECIFIC DISCLAIMERS, SET FORTH AT www.vishay.com/doc?91000

I²C BUS TIMING CHARACTERISTICS (T_{amb} = 25 °C, unless otherwise specified)						
PARAMETER	**SYMBOL**	**STANDARD MODE**		**FAST MODE**		**UNIT**
		MIN.	**MAX.**	**MIN.**	**MAX.**	
Clock frequency	$f_{(I2CCLK)}$	10	100	10	400	kHz
Bus free time between start and stop condition	$t_{(BUF)}$	4.7	-	1.3	-	µs
Hold time after (repeated) start condition; after this period, the first clock is generated	$t_{(HDSTA)}$	4.0	-	0.6	-	µs
Repeated start condition setup time	$t_{(SUSTA)}$	4.7	-	0.6	-	µs
Stop condition setup time	$t_{(SUSTO)}$	4.0	-	0.6	-	µs
Data hold time	$t_{(HDDAT)}$	0	3450	0	900	ns
Data setup time	$t_{(SUDAT)}$	250	-	100	-	ns
I²C clock (SCL) low period	$t_{(LOW)}$	4.7	-	1.3	-	µs
I²C clock (SCL) high period	$t_{(HIGH)}$	4.0	-	0.6	-	µs
Clock / data fall time	$t_{(f)}$	-	300	-	300	ns
Clock / data rise time	$t_{(r)}$	-	1000	-	300	ns

Note

- Data based on standard I²C protocol requirement, not tested in production

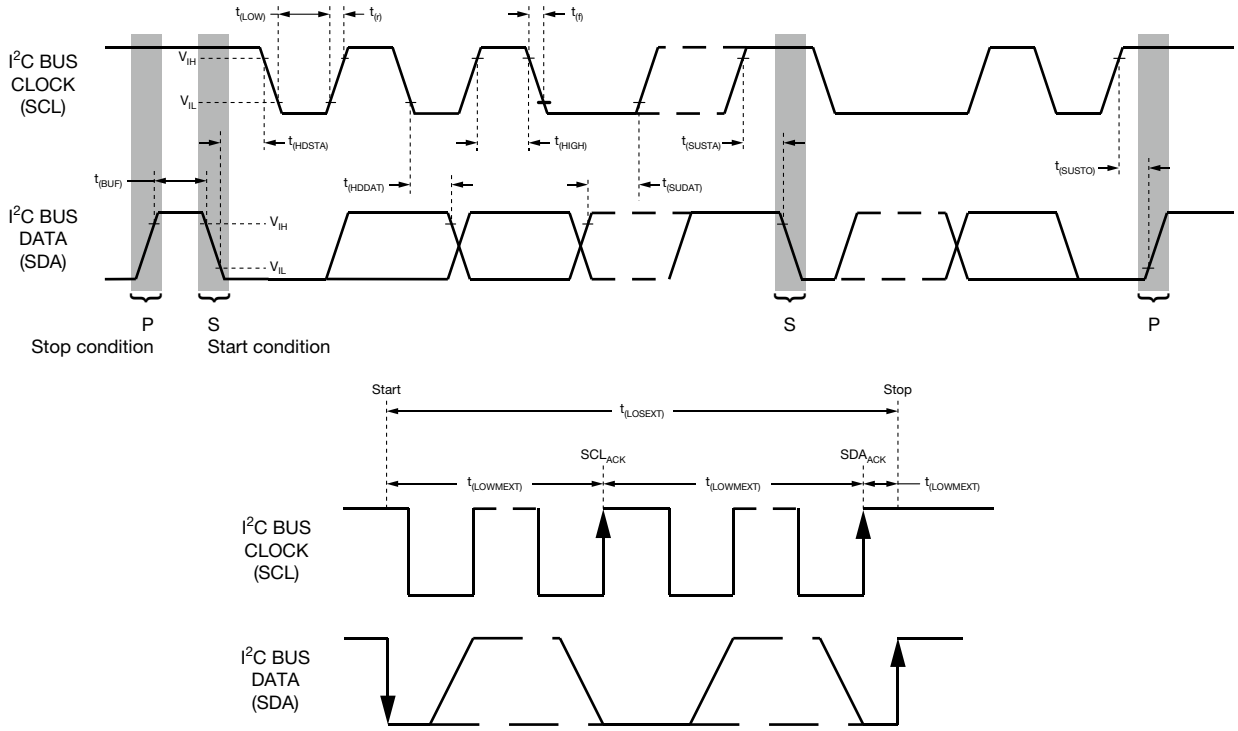

Fig. 1 - I²C Bus Timing Diagram

For technical questions, contact: sensorstechsupport@vishay.com
THIS DOCUMENT IS SUBJECT TO CHANGE WITHOUT NOTICE. THE PRODUCTS DESCRIBED HEREIN AND THIS DOCUMENT ARE SUBJECT TO SPECIFIC DISCLAIMERS, SET FORTH AT www.vishay.com/doc?91000

PARAMETER TIMING INFORMATION

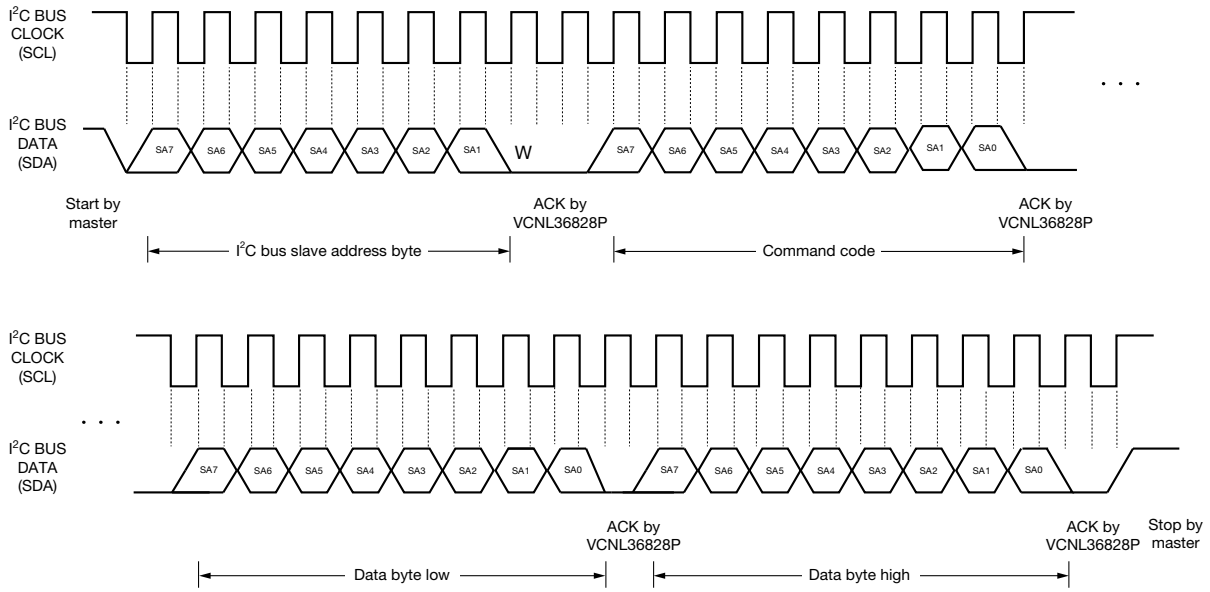

Fig. 2 - I²C Bus Timing for Sending Word Command Format

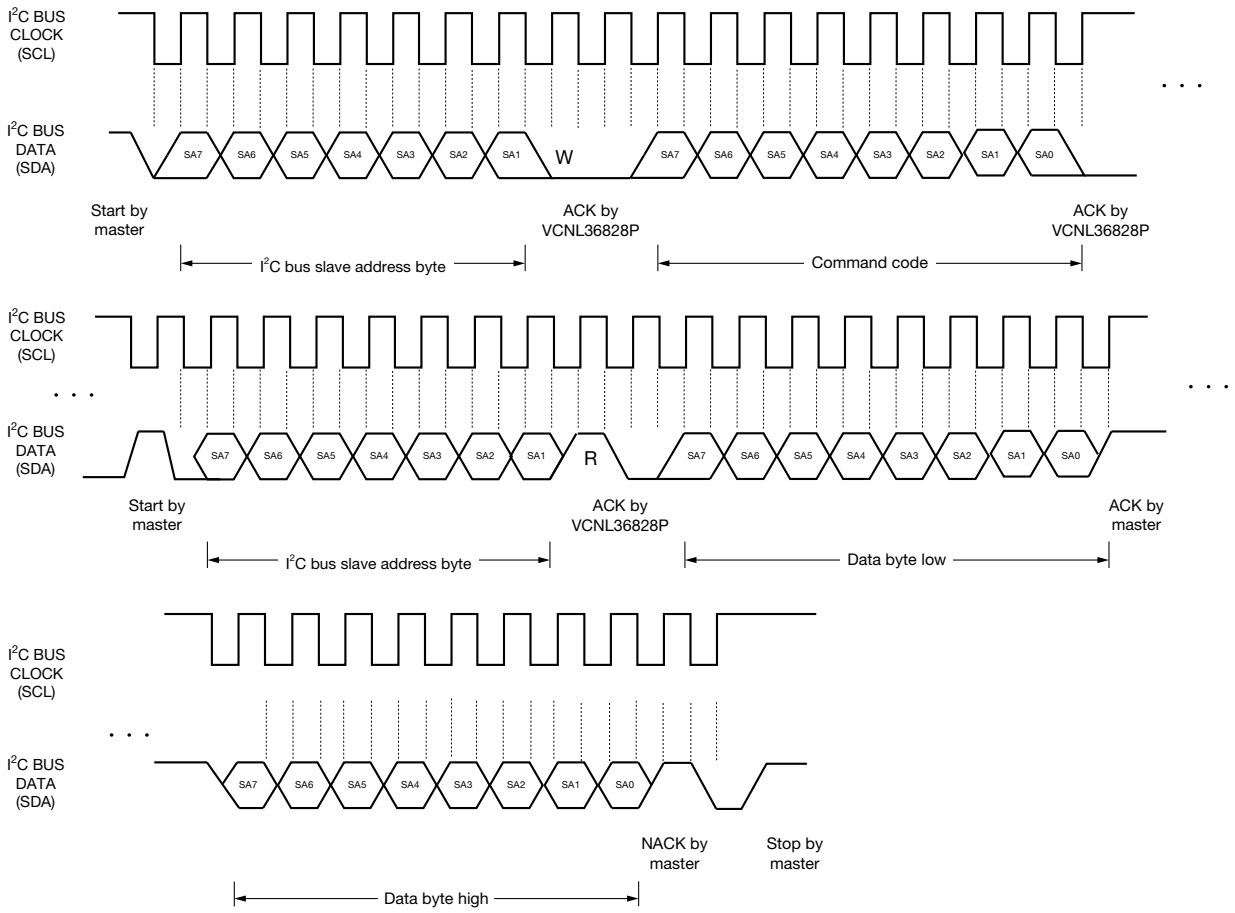

Fig. 3 - I²C Bus Timing for Receiving Word Command Format

For technical questions, contact: sensorstechsupport@vishay.com
THIS DOCUMENT IS SUBJECT TO CHANGE WITHOUT NOTICE. THE PRODUCTS DESCRIBED HEREIN AND THIS DOCUMENT ARE SUBJECT TO SPECIFIC DISCLAIMERS, SET FORTH AT www.vishay.com/doc?91000

TYPICAL PERFORMANCE CHARACTERISTICS (T_{amb} = 25 °C, unless otherwise specified)

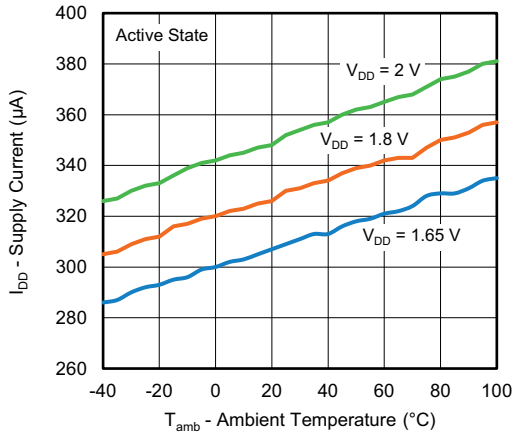

Fig. 4 - Supply Current vs. Ambient Temperature

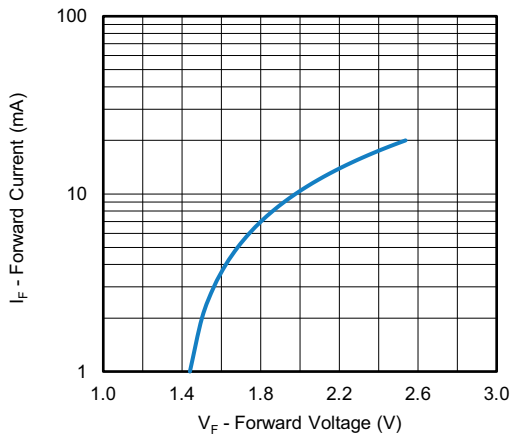

Fig. 5 - Forward Current vs. Forward Voltage of the VCSEL

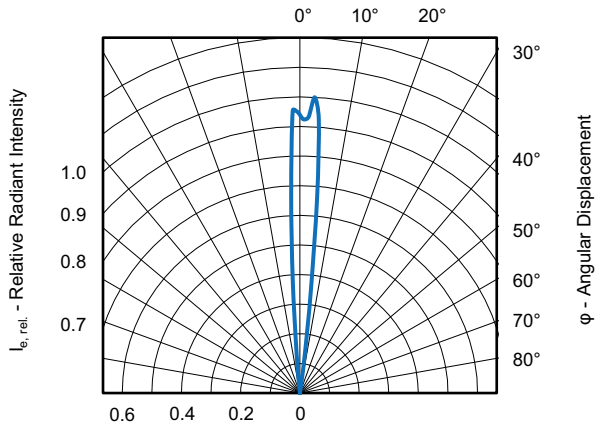

Fig. 6 - Relative Radiant Intensity vs. Angular Displacement of the VCSEL

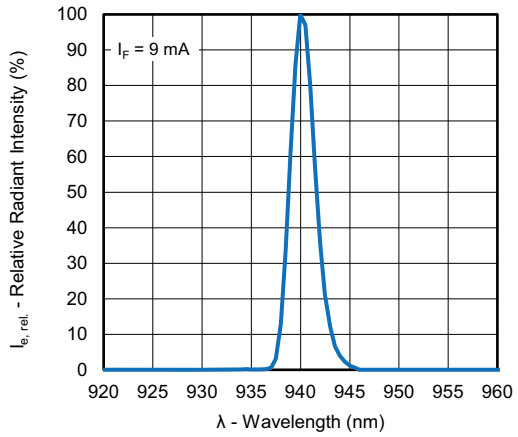

Fig. 7 - Relative Radiant Intensity vs. Wavelength of the VCSEL

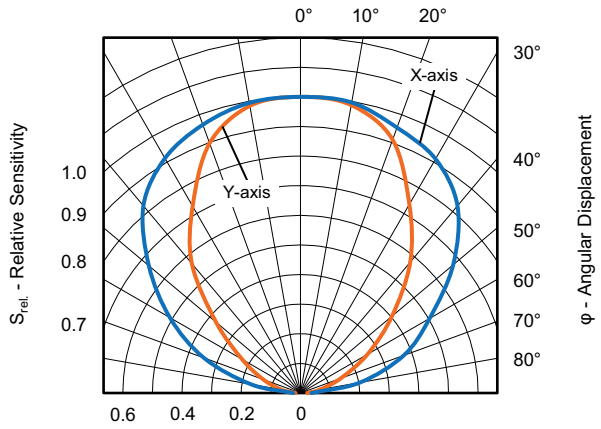

Fig. 8 - Relative Sensitivity vs. Angular Displacement of the Photodiode

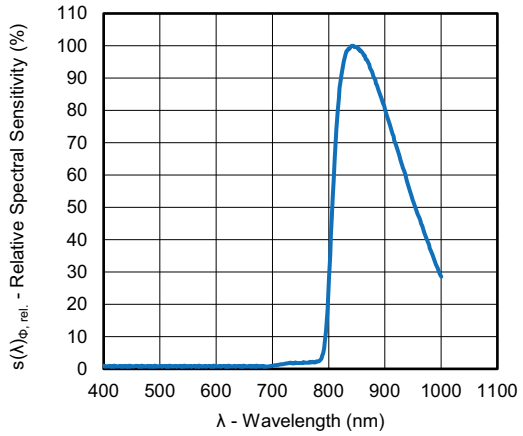

Fig. 9 - Relative Spectral Sensitivity vs. Wavelength of the Photodiode

For technical questions, contact: sensorstechsupport@vishay.com
THIS DOCUMENT IS SUBJECT TO CHANGE WITHOUT NOTICE. THE PRODUCTS DESCRIBED HEREIN AND THIS DOCUMENT ARE SUBJECT TO SPECIFIC DISCLAIMERS, SET FORTH AT www.vishay.com/doc?91000

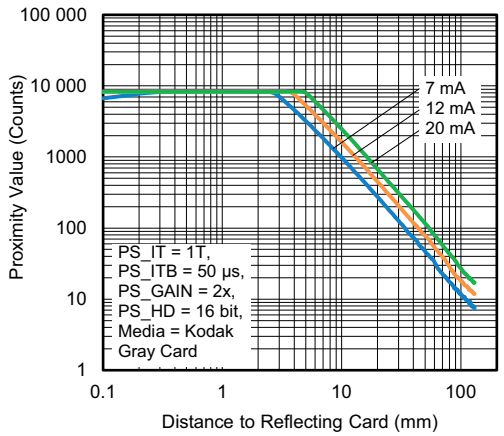

Fig. 10 - Proximity Value vs. Distance

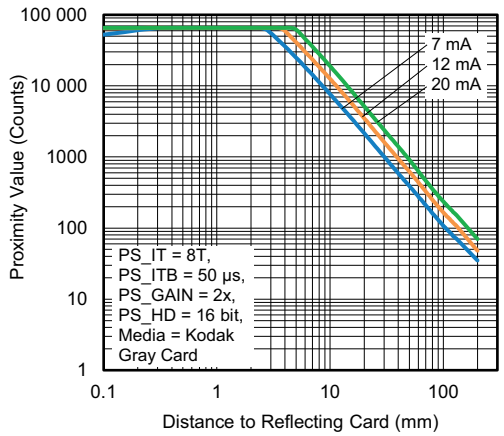

Fig. 11 - Proximity Value vs. Distance

APPLICATION INFORMATION

Slave Address Selection

The VCNL36828P supports a smart dual slave address where the designer can change the slave address by swapping the SCL and SDA pins, as shown in Table 1.

TABLE 1 - SLAVE ADDRESS TABLE

PIN 5	PIN 6	7 BIT SLAVE ADDRESS	8 BIT SLAVE ADDRESS (WRITE)	8 BIT SLAVE ADDRESS (READ)
SCL	SDA	0x60	0xC0	0xC1
SDA	SCL	0x51	0xA2	0xA3

A smart dual slave address provides the flexibility for the designer to connect two devices from two different slave addresses on the same I^2C bus. Besides that, the two slave address options allow designers to select a different slave address if one is used by the other slave devices on the same I^2C bus in a single device application.

Application Circuit With a Single Device - Slave Address 0x60

Fig. 12 shows an application circuit example with a single device. As described in Table 1, when pins 5 and 6 are connected to the clock and data signal from the microcontroller, as shown in Fig. 12, they will then be configured as an SCL pin and SDA pin, respectively. The 7 bit slave address option of 0x60 will be automatically selected.

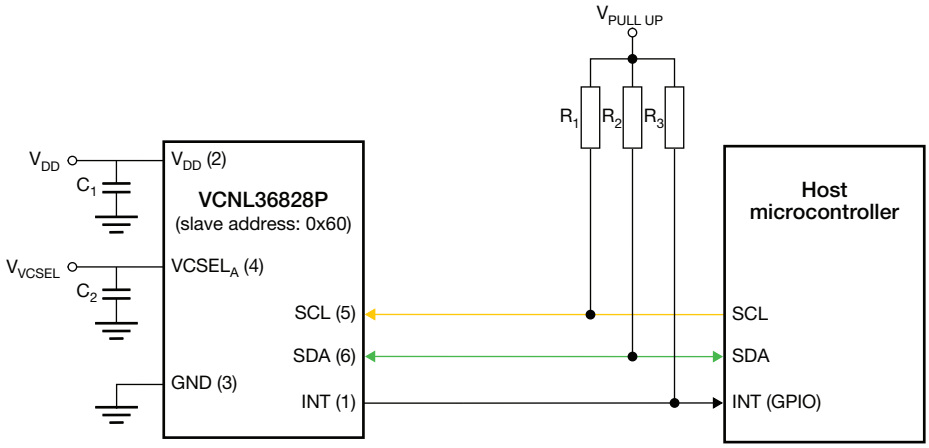

Fig. 12 - Application Circuit Example for a Single VCNL36828P - Slave Address 0x60

For technical questions, contact: sensorstechsupport@vishay.com
THIS DOCUMENT IS SUBJECT TO CHANGE WITHOUT NOTICE. THE PRODUCTS DESCRIBED HEREIN AND THIS DOCUMENT ARE SUBJECT TO SPECIFIC DISCLAIMERS, SET FORTH AT www.vishay.com/doc?91000

Application Circuit With a Single Device - Slave Address 0x51

On the other hand, when pins 5 and 6 are connected to the data and clock signal from the microcontroller, as shown in Fig. 13, they will then be configured as an SDA pin and SCL pin, respectively. The 7 bit slave address option of 0x51 will be automatically selected.

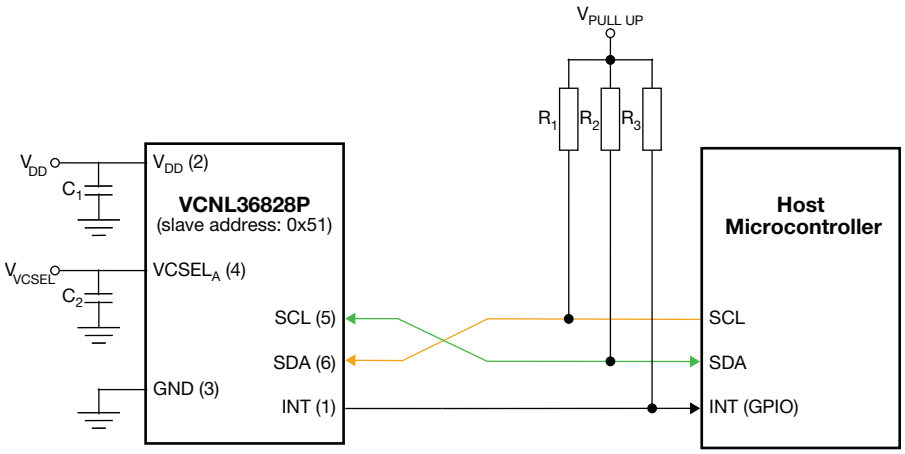

Fig. 13 - Application Circuit Example for a Single VCNL36828P - Slave Address 0x51

Table 2 shows the required values and the explanation for the individual application circuit parameters.

TABLE 2 - APPLICATION CIRCUIT PARAMETERS

CIRCUIT PARAMETER	VALUE	DESCRIPTION
V_{DD}	1.65 V to 2.00 V	A stable power supply such as a low dropout regulator or a switching regulator is required; the power supply isolation can be further improved with a decoupling capacitor C_1
V_{VCSEL}	2.62 V to 3.60 V	A stable power supply such as a low dropout regulator or a switching regulator that can supply an adequate amount of power (max. VCSEL pulse driving current of 20 mA) is required; the power supply isolation can be further improved with a decoupling capacitor C_2; the minimum voltage depends on the selected driving current of the VCSEL; please refer to Table $V_{VCSEL,\ min.}$ for reference
$V_{PULL\ UP}$	1.2 V to 3.6 V	A stable power supply such as a low dropout regulator or a switching regulator is required; a voltage level shifter is required if the I^2C bus voltage from the microcontroller is higher than 3.6 V
C_1 - C_4	100 nF to 1 μF	Decoupling capacitors are recommended to reduce the noise in the supply voltage
R_1 - R_2	2.2 kΩ to 4.7 kΩ	Pull-up resistors within the range of 2.2 kΩ to 4.7 kΩ are recommended; any increase in bus capacitance or resistance will increase the logic high transition time
R_3	4.7 kΩ to 22 kΩ	Pull-up resistor within the range of 4.7 kΩ to 22 kΩ is recommended

For technical questions, contact: sensorstechsupport@vishay.com
THIS DOCUMENT IS SUBJECT TO CHANGE WITHOUT NOTICE. THE PRODUCTS DESCRIBED HEREIN AND THIS DOCUMENT ARE SUBJECT TO SPECIFIC DISCLAIMERS, SET FORTH AT www.vishay.com/doc?91000

Application Circuit With a Smart Dual Slave Address

Fig. 14 shows an application circuit example with a smart dual slave address. By swapping the SCL and SDA pins of the second device, as shown in Table 1, the designer can change the 7 bit slave address of the VCNL36828P. This provides the flexibility for the designer to connect two devices from two different slave addresses on the same I²C bus.

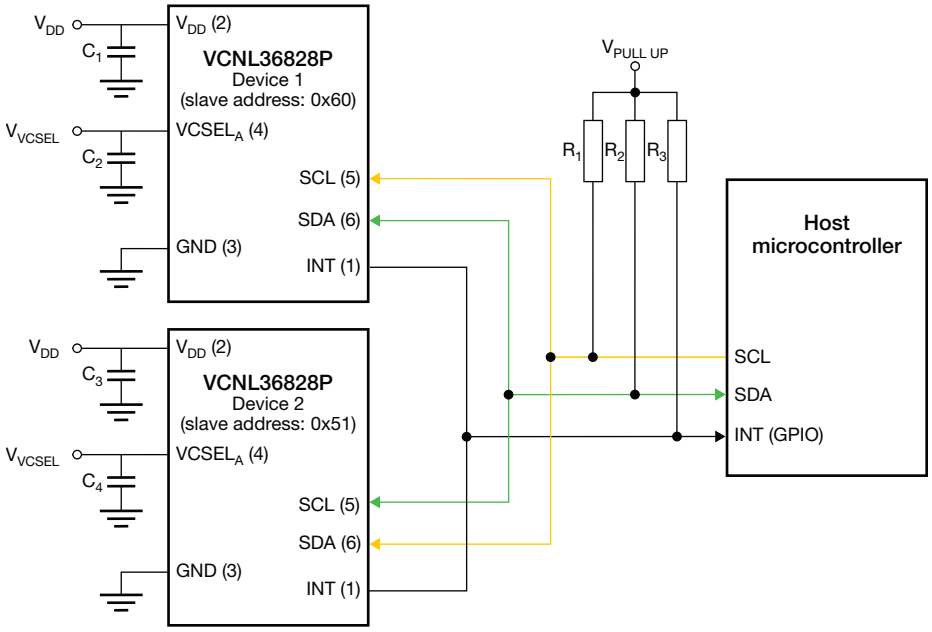

Fig. 14 - Application Circuit Example for Two VCNL36828Ps - Smart Dual Slave Address

I²C Write and Read Protocol

The communication with the VCNL36828P can be performed via I²C. The I²C write and read protocol when communicating with the proximity sensor is shown in Fig. 15.

Fig. 15 - I²C Write and Read Protocol

It is imperative that only the restart condition for the I²C read is implemented instead of the stop and restart condition.

For technical questions, contact: sensorstechsupport@vishay.com
THIS DOCUMENT IS SUBJECT TO CHANGE WITHOUT NOTICE. THE PRODUCTS DESCRIBED HEREIN AND THIS DOCUMENT ARE SUBJECT TO SPECIFIC DISCLAIMERS, SET FORTH AT www.vishay.com/doc?91000

Function Description

TABLE 3 - COMMAND CODE AND REGISTER DESCRIPTION					
COMMAND CODE	DATA BYTE LOW / HIGH	REGISTER NAME	DEFAULT VALUE	FUNCTION	ACCESS
0x00	L	PS_CONF1_L	0x00	Internal calibration setting	Write and read
				Switch the sensor on / off	
	H	PS_CONF1_H	0x00	High dynamic range setting	
				Persistence setting	
				Interrupt setting	
0x01	L	PS_CONF2_L	0x00	Measurement period setting	
				Signal strength setting (Integration time and multi-pulse)	
				High gain setting	
	H	PS_CONF2_H	0x00	Sensitivity of the ADC setting	
				Internal crosstalk cancellation setting	
				VCSEL driving current setting	
0x02	L	PS_CONF3_L	0x00	Sensor mode setting	
				Active force mode trigger setting	
	H	PS_CONF3_H	0x00	Short measurement period setting	
				Sunlight cancellation setting	
0x03	L	PS_THDL_L	0x00	Low threshold interrupt value setting (low byte)	
	H	PS_THDL_H	0x00	Low threshold interrupt value setting (high byte)	
0x04	L	PS_THDH_L	0x00	High threshold interrupt value setting (low byte)	
	H	PS_THDH_H	0x00	High threshold interrupt value setting (high byte)	
0x05	L	PS_CANC_L	0x00	Offset count cancellation value setting (low byte)	
	H	PS_CANC_H	0x00	Offset count cancellation value setting (high byte)	
0xF8	L	PS_DATA_L	0x00	Proximity output data (low byte)	Read only
	H	PS_DATA_H	0x00	Proximity output data (high byte)	
0xF9	L	Reserved	0x00 - 0xFF	Reserved	
	H	INT_FLAG	0x00	Interrupt flag	
0xFA	L	VCNL36828P_ID_L	0x28 / 0x29	Device ID Slave address: 0x60; ID = 0x28 Slave address: 0x51; ID = 0x29	
	H	VCNL36828P_ID_H	0x01	Device ID	

Notes

- All of the reserved registers are used for internal test. These values must be kept constant

(1) The default ID depends on the connection of the SCL and SDA pins on the VCNL36828P with the SCL and SDA pins on the host MCU. If pins 5 and 6 on the VCNL36828P are connected to the SCL and SDA pins on the host, the default value will be 0x28. On the other hand, if pins 5 and 6 on the VCNL36828P are connected to the SDA and SCL pins on the host, the default value will be 0x29. Please refer to Fig. 13

For technical questions, contact: sensorstechsupport@vishay.com
THIS DOCUMENT IS SUBJECT TO CHANGE WITHOUT NOTICE. THE PRODUCTS DESCRIBED HEREIN AND THIS DOCUMENT ARE SUBJECT TO SPECIFIC DISCLAIMERS, SET FORTH AT www.vishay.com/doc?91000

Command Register Format

TABLE 4 - REGISTER NAME: PS_CONF1_L							
Bit 7	Bit 6	Bit 5	Bit 4	Bit 3	Bit 2	Bit 1	Bit 0
PS_CAL	Reserved						PS_ON
COMMAND CODE					**0x00**		

Bit Name	Function	Bit	Value	Description
PS_CAL	Enable / disable the internal calibration	7	0x0 (0b0)	Disable (default)
			0x1 (0b1)	Enable
Reserved	Reserved	6 : 1	0x00 (0b000000)	Should be kept default
PS_ON	Switch the sensor on / off	0	0x0 (0b0)	Turn off the sensor (shutdown) (default)
			0x1 (0b1)	Turn on the sensor

TABLE 5 - REGISTER NAME: PS_CONF1_H							
Bit 15	Bit 14	Bit 13	Bit 12	Bit 11	Bit 10	Bit 9	Bit 8
Reserved	PS_HD	PS_SP_INT	PS_SMART_PERS	PS_PERS		PS_INT	
COMMAND CODE					**0x00**		

Bit Name	Function	Bit	Value	Description
Reserved	Reserved	15	0x0 (0b0)	Should be kept default
PS_HD	Enable / disable high dynamic range (12 bit / 16 bit) ADC output setting	14	0x0 (0b0)	Disable (12 bit) (default)
			0x1 (0b1)	Enable (16 bit)
PS_SP_INT	Enable / disable the sunlight protection mode interrupt setting	13	0x0 (0b0)	Disable (default)
			0x1 (0b1)	Enable
PS_SMART_PERS	Enable / disable the smart persistence setting when the interrupt event is triggered	12	0x0 (0b0)	Disable (default)
			0x1 (0b1)	Enable
PS_PERS	Set the amount of consecutive threshold crossing events necessary to trigger interrupt	11 : 10	0x0 (0b00)	1 time (default)
			0x1 (0b01)	2 times
			0x2 (0b10)	3 times
			0x3 (0b11)	4 times
PS_INT	Set the interrupt mode setting	9 : 8	0x0 (0b00)	Interrupt disable (default)
			0x1 (0b01)	Logic high / low mode
			0x3 (0b11)	Trigger by each high / low threshold event

For technical questions, contact: sensorstechsupport@vishay.com
THIS DOCUMENT IS SUBJECT TO CHANGE WITHOUT NOTICE. THE PRODUCTS DESCRIBED HEREIN AND THIS DOCUMENT ARE SUBJECT TO SPECIFIC DISCLAIMERS, SET FORTH AT www.vishay.com/doc?91000

TABLE 6 - REGISTER NAME: PS_CONF2_L

Bit 7	Bit 6	Bit 5	Bit 4	Bit 3	Bit 2	Bit 1	Bit 0
PS_PERIOD		PS_IT		PS_MPS		PS_ITB	PS_GAIN

COMMAND CODE			0x01	
Bit Name	Function	**Bit**	**Value**	**Description**
PS_PERIOD	Set the measurement period	7 : 6	0x0 (0b00)	50 ms, which translates into 20 measurement/s (default)
			0x1 (0b01)	100 ms, which translates into 10 measurements/s
			0x2 (0b10)	200 ms, which translates into 5 measurements/s
			0x3 (0b11)	400 ms, which translates into 2.5 measurements/s
PS_IT	Set the integration time for one measurement; the pulse length “T” is determined by PS_ITB	5 : 4	0x0 (0b00)	1 T (default)
			0x1 (0b01)	2 T
			0x2 (0b10)	4 T
			0x3 (0b11)	8 T
PS_MPS	Set the number of infrared signal pulses per measurement	3 : 2	0x0 (0b00)	1 pulse (default)
			0x1 (0b01)	2 pulses
			0x2 (0b10)	4 pulses
			0x3 (0b11)	8 pulses
PS_ITB	Set the pulse length “T” for PS_IT	1	0x0 (0b0)	T = 25 µs (default)
			0x1 (0b1)	T = 50 µs
PS_GAIN	Set the gain of the ADC	0	0x0 (0b0)	x 1 gain (default)
			0x1 (0b1)	x 2 gain

TABLE 7 - REGISTER NAME: PS_CONF2_H

Bit 15	Bit 14	Bit 13	Bit 12	Bit 11	Bit 10	Bit 9	Bit 8
Reserved		PS_SENS	PS_OFFSET	Reserved	PS_CURRENT		

COMMAND CODE			0x01	
Bit Name	**Function**	**Bit**	**Value**	**Description**
Reserved	Reserved	15 : 14	0x0 (0b00)	Should be kept default
PS_SENS	Set the sensitivity of the ADC	13	0x0 (0b0)	Normal sensitivity (default)
			0x1 (0b1)	High sensitivity
PS_OFFSET	Enable / disable the internal crosstalk cancellation	12	0x0 (0b0)	Disable (default)
			0x1 (0b1)	Enable
Reserved	Reserved	11	0x0 (0b0)	Should be kept default
PS_CURRENT	Set the VCSEL driving current	10 : 8	0x0 (0b000)	7 mA (default)
			0x1 (0b001)	9 mA
			0x2 (0b010)	11 mA
			0x3 (0b011)	12 mA
			0x4 (0b100)	15 mA
			0x5 (0b101)	17 mA
			0x6 (0b110)	19 mA
			0x7 (0b111)	20 mA

THIS DOCUMENT IS SUBJECT TO CHANGE WITHOUT NOTICE. THE PRODUCTS DESCRIBED HEREIN AND THIS DOCUMENT ARE SUBJECT TO SPECIFIC DISCLAIMERS, SET FORTH AT www.vishay.com/doc?91000

TABLE 8 - MAXIMUM BIT RESOLUTION AND DIGITAL OUTPUT COUNTS					
BIT NAME		PS_IT = 1T	PS_IT = 2T	PS_IT = 4T	PS_IT = 8T
PS_HD = 0 (12 bit)	PS_GAIN = 0 (x1 gain)	12 bit / 4095 counts			
	PS_GAIN = 1 (x2 gain)				
PS_HD = 1 (16 bit)	PS_GAIN = 0 (x1 gain)	12 bit / 4095 counts	13 bit / 8191 counts	14 bit / 16 383 counts	15 bit / 32 767 counts
	PS_GAIN = 1 (x2 gain)	13 bit / 8191 counts	14 bit / 16 383 counts	15 bit / 32 767 counts	16 bit / 65 535 counts

TABLE 9 - REGISTER NAME: PS_CONF3_L							
Bit 7	Bit 6	Bit 5	Bit 4	Bit 3	Bit 2	Bit 1	Bit 0
Reserved		PS_TRIG	PS_MODE	Reserved			
COMMAND CODE					**0x02**		
Bit Name		**Function**		**Bit**	**Value**	**Description**	
Reserved		Reserved		7 : 6	0x0 (0b00)	Should be kept default	
PS_TRIG		Set the active force mode trigger; This bit will be reset to 0 after the measurement cycle		5	0x0 (0b0)	Off (default)	
					0x1 (0b1)	Trigger	
PS_MODE		Set the measurement mode of the sensor		4	0x0 (0b0)	Auto mode (default)	
					0x1 (0b1)	Active force mode	
Reserved		Reserved		3 : 0	0x0 (0b0000)	Should be kept default	

TABLE 10 - REGISTER NAME: PS_CONF3_H							
Bit 15	Bit 14	Bit 13	Bit 12	Bit 11	Bit 10	Bit 9	Bit 8
PS_SPERIOD		Reserved	PS_SC			Reserved	
COMMAND CODE					**0x02**		
Bit Name		**Function**		**Bit**	**Value**	**Description**	
PS_SPERIOD		Set the short measurement period		15 : 14	0x0 (0b00)	Disable the short period (follow PS_PERIOD setting) (default)	
					0x1 (0b01)	6.25 ms, which translates into 160 measurements/s	
					0x2 (0b10)	12.5 ms, which translates into 80 measurements/s	
					0x3 (0b11)	25 ms, which translates into 40 measurements/s	
Reserved		Reserved		13	0x0 (0b0)	Should be kept default	
PS_SC		Enable / disable the sunlight cancellation		12 : 10	0x0 (0b000)	Disable (default)	
					0x7 (0b111)	Enable	
Reserved		Reserved		9 : 8	0x0 (0b00)	Should be kept default	

For technical questions, contact: sensorstechsupport@vishay.com
THIS DOCUMENT IS SUBJECT TO CHANGE WITHOUT NOTICE. THE PRODUCTS DESCRIBED HEREIN AND THIS DOCUMENT ARE SUBJECT TO SPECIFIC DISCLAIMERS, SET FORTH AT www.vishay.com/doc?91000

TABLE 11 - REGISTER NAME: PS_THDL							
Bit 7	Bit 6	Bit 5	Bit 4	Bit 3	Bit 2	Bit 1	Bit 0
PS_THDL_L							
Bit 15	Bit 14	Bit 13	Bit 12	Bit 11	Bit 10	Bit 9	Bit 8
PS_THDL_H							
COMMAND CODE					**0x03**		
Bit Name		**Function**		**Bit**	**Value**	**Description**	
PS_THDL_L		Set the low threshold interrupt value		7 : 0	0 to 65 535	Low byte	
PS_THDL_H				15 : 8		High byte	

TABLE 12 - REGISTER NAME: PS_THDH							
Bit 7	Bit 6	Bit 5	Bit 4	Bit 3	Bit 2	Bit 1	Bit 0
PS_THDH_L							
Bit 15	Bit 14	Bit 13	Bit 12	Bit 11	Bit 10	Bit 9	Bit 8
PS_THDH_H							
COMMAND CODE					**0x04**		
Bit Name		**Function**		**Bit**	**Value**	**Description**	
PS_THDH_L		Set the high threshold interrupt value		7 : 0	0 to 65 535	Low byte	
PS_THDH_H				15 : 8		High byte	

TABLE 13 - REGISTER NAME: PS_CANC							
Bit 7	Bit 6	Bit 5	Bit 4	Bit 3	Bit 2	Bit 1	Bit 0
PS_CANC_L							
Bit 15	Bit 14	Bit 13	Bit 12	Bit 11	Bit 10	Bit 9	Bit 8
Reserved				PS_CANC_H			
COMMAND CODE					**0x05**		
Bit Name		**Function**		**Bit**	**Value**	**Description**	
PS_CANC_L		Set the offset count cancellation value		7 : 0	0 to 4095	Low byte	
PS_CANC_H				11 : 8		High byte	
Reserved		Reserved		15 : 12	0x0 (0b0000)	Should be kept default	

TABLE 14 - REGISTER NAME: PS_DATA							
Bit 7	Bit 6	Bit 5	Bit 4	Bit 3	Bit 2	Bit 1	Bit 0
PS_DATA_L							
Bit 15	Bit 14	Bit 13	Bit 12	Bit 11	Bit 10	Bit 9	Bit 8
PS_DATA_H							
COMMAND CODE					**0xF8**		
Bit Name		**Function**		**Bit**	**Value**	**Description**	
PS_DATA_L		Read the proximity output data		7 : 0	0 to 65 535	Low byte	
PS_DATA_H				15 : 8		High byte	

For technical questions, contact: sensorstechsupport@vishay.com
THIS DOCUMENT IS SUBJECT TO CHANGE WITHOUT NOTICE. THE PRODUCTS DESCRIBED HEREIN AND THIS DOCUMENT ARE SUBJECT TO SPECIFIC DISCLAIMERS, SET FORTH AT www.vishay.com/doc?91000

TABLE 15 - REGISTER NAME: INT_FLAG							
Bit 7	Bit 6	Bit 5	Bit 4	Bit 3	Bit 2	Bit 1	Bit 0
Reserved							
Bit 15	Bit 14	Bit 13	Bit 12	Bit 11	Bit 10	Bit 9	Bit 8
Reserved			PS_SPFLAG	Reserved		PS_IF_CLOSE	PS_IF_AWAY
COMMAND CODE					**0xF9**		

Bit Name	Function	Bit	Value	Description
Reserved	Reserved	7 : 0	0x00 - 0xFF (0b00000000 - 0b11111111)	Should be kept default
Reserved	Reserved	15 : 13	0x0 (0b000)	Should be kept default
PS_SPFLAG	Read the sunlight protection mode interrupt event flag	12	0x0 (0b0)	No sunlight protection mode interrupt event flag
			0x1 (0b1)	Sunlight protection mode interrupt event flag
Reserved	Reserved	11 : 10	0x0 (0b00)	Should be kept default
PS_IF_CLOSE	Read the high threshold crossing interrupt event flag	9	0x0 (0b0)	No high threshold crossing interrupt event flag
			0x1 (0b1)	High threshold crossing interrupt event flag
PS_IF_AWAY	Read the low threshold crossing interrupt event flag	8	0x0 (0b0)	No low threshold crossing interrupt event flag
			0x1 (0b1)	Low threshold crossing interrupt event flag

TABLE 16 - REGISTER NAME: VCNL36828P_ID							
Bit 7	Bit 6	Bit 5	Bit 4	Bit 3	Bit 2	Bit 1	Bit 0
VCNL36828P_ID_L							
Bit 15	Bit 14	Bit 13	Bit 12	Bit 11	Bit 10	Bit 9	Bit 8
VCNL36828P_ID_H							
COMMAND CODE					**0xFA**		

Bit Name	Function	Bit	Value	Description
VCNL36828P_ID_L	Read the device ID	7 : 0	0x28 (0b00101000)	Device with a slave address of 0x60
			0x29 (0b00101001)	Device with a slave address of 0x51
VCNL36828P_ID_H		15 : 8	0x01 (0b00000001)	Should be kept default

THIS DOCUMENT IS SUBJECT TO CHANGE WITHOUT NOTICE. THE PRODUCTS DESCRIBED HEREIN AND THIS DOCUMENT ARE SUBJECT TO SPECIFIC DISCLAIMERS, SET FORTH AT www.vishay.com/doc?91000

PACKAGE INFORMATION in millimeters

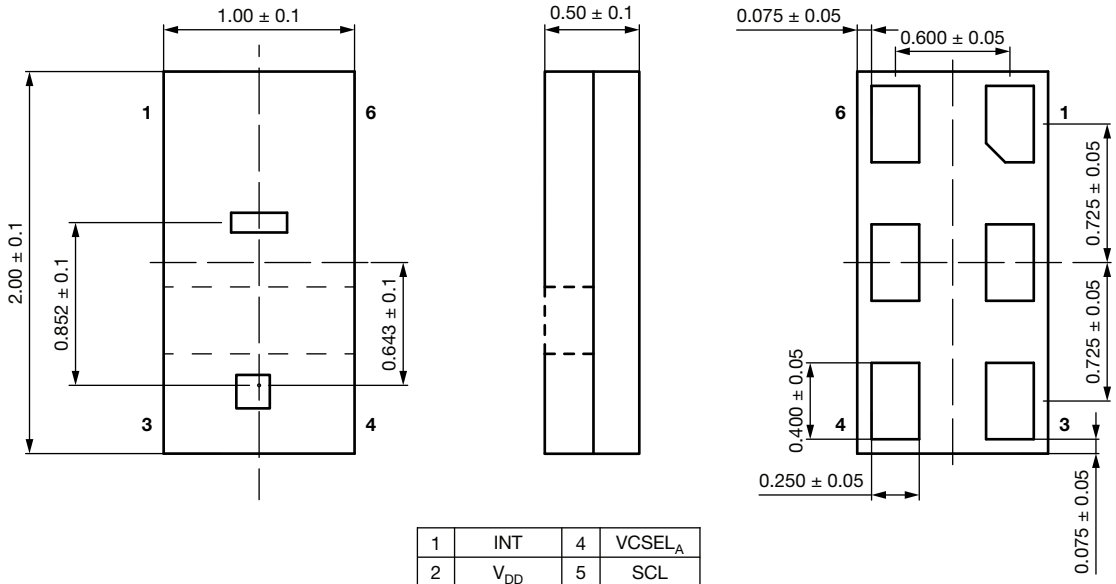

1	INT	4	$VCSEL_A$
2	V_{DD}	5	SCL
3	GND	6	SDA

Fig. 16 - VCNL36828P Package Dimensions

RECOMMENDED LAYOUT PAD INFORMATION in millimeters

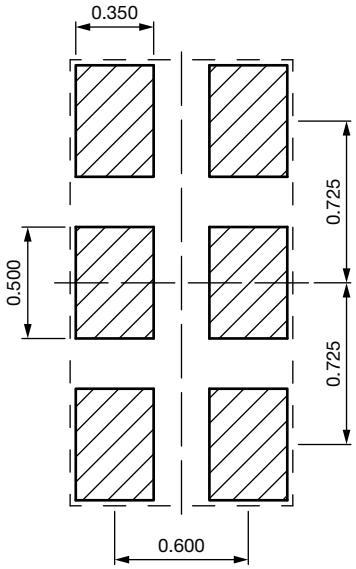

Fig. 17 - VCNL36828P PCB Layout Footprint

For technical questions, contact: sensorstechsupport@vishay.com
THIS DOCUMENT IS SUBJECT TO CHANGE WITHOUT NOTICE. THE PRODUCTS DESCRIBED HEREIN AND THIS DOCUMENT ARE SUBJECT TO SPECIFIC DISCLAIMERS, SET FORTH AT www.vishay.com/doc?91000

RECOMMENDED INFRARED REFLOW

Soldering conditions which are based on J-STD-020C

IR REFLOW PROFILE CONDITION			
PARAMETER	**CONDITIONS**	**TEMPERATURE**	**TIME**
Peak temperature		260 °C + 5 °C / - 5 °C (max.: 265 °C)	10 s
Preheat temperature range and timing		150 °C to 200 °C	60 s to 180 s
Timing within 5 °C to peak temperature		-	10 s to 30 s
Timing maintained above temperature / time		217 °C	60 s to 150 s
Timing from 25 °C to peak temperature		-	8 min (max.)
Ramp-up rate		3 °C/s (max.)	-
Ramp-down rate		6 °C/s (max.)	-

Recommend Normal Solder Reflow is 235 °C to 265 °C

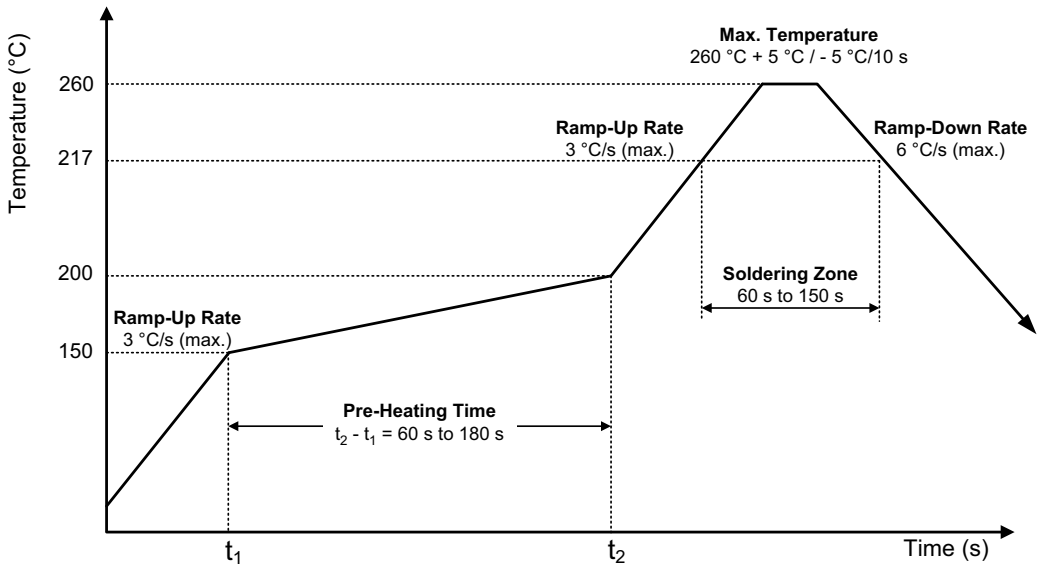

Fig. 18 - VCNL36828P Solder Reflow Profile Chart

For technical questions, contact: sensorstechsupport@vishay.com
THIS DOCUMENT IS SUBJECT TO CHANGE WITHOUT NOTICE. THE PRODUCTS DESCRIBED HEREIN AND THIS DOCUMENT ARE SUBJECT TO SPECIFIC DISCLAIMERS, SET FORTH AT www.vishay.com/doc?91000

TAPE PACKAGING INFORMATION in millimeters

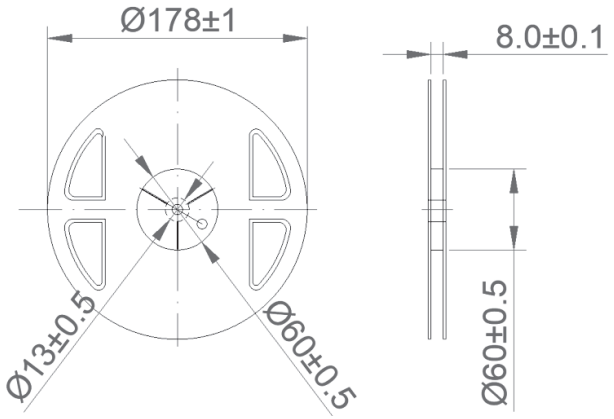

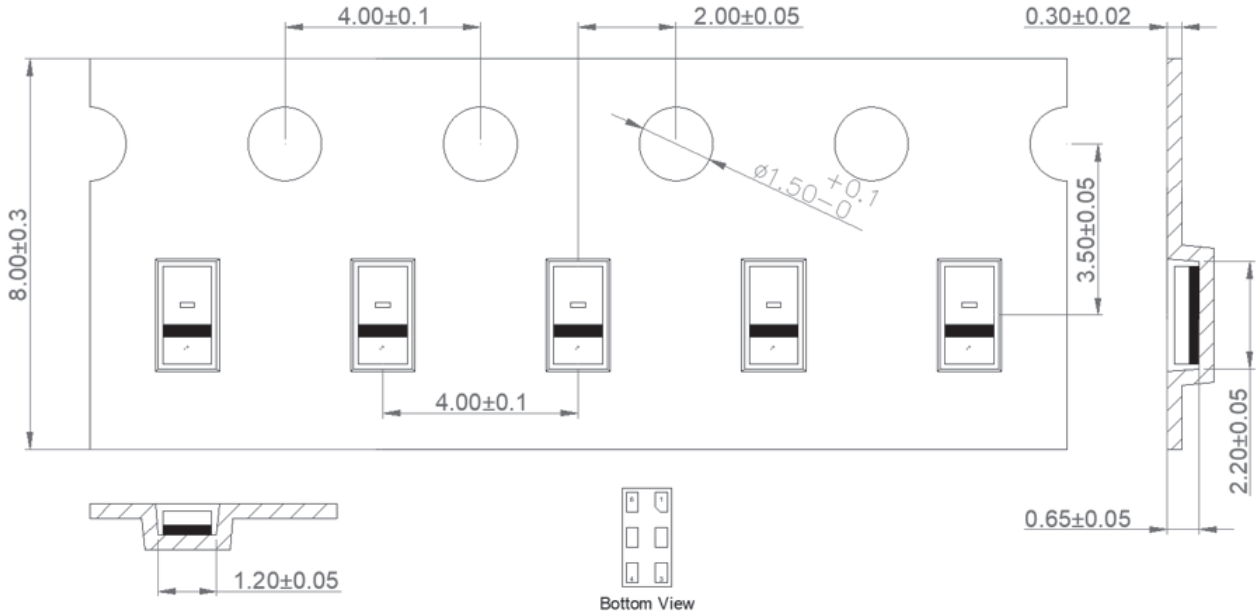

For technical questions, contact: sensorstechsupport@vishay.com
THIS DOCUMENT IS SUBJECT TO CHANGE WITHOUT NOTICE. THE PRODUCTS DESCRIBED HEREIN AND THIS DOCUMENT ARE SUBJECT TO SPECIFIC DISCLAIMERS, SET FORTH AT www.vishay.com/doc?91000

Disclaimer

ALL PRODUCT, PRODUCT SPECIFICATIONS AND DATA ARE SUBJECT TO CHANGE WITHOUT NOTICE TO IMPROVE RELIABILITY, FUNCTION OR DESIGN OR OTHERWISE.

Vishay Intertechnology, Inc., its affiliates, agents, and employees, and all persons acting on its or their behalf (collectively, “Vishay”), disclaim any and all liability for any errors, inaccuracies or incompleteness contained in any datasheet or in any other disclosure relating to any product.

Vishay makes no warranty, representation or guarantee regarding the suitability of the products for any particular purpose or the continuing production of any product. To the maximum extent permitted by applicable law, Vishay disclaims (i) any and all liability arising out of the application or use of any product, (ii) any and all liability, including without limitation special, consequential or incidental damages, and (iii) any and all implied warranties, including warranties of fitness for particular purpose, non-infringement and merchantability.

Statements regarding the suitability of products for certain types of applications are based on Vishay's knowledge of typical requirements that are often placed on Vishay products in generic applications. Such statements are not binding statements about the suitability of products for a particular application. It is the customer's responsibility to validate that a particular product with the properties described in the product specification is suitable for use in a particular application. Parameters provided in datasheets and / or specifications may vary in different applications and performance may vary over time. All operating parameters, including typical parameters, must be validated for each customer application by the customer's technical experts. Product specifications do not expand or otherwise modify Vishay's terms and conditions of purchase, including but not limited to the warranty expressed therein.

Hyperlinks included in this datasheet may direct users to third-party websites. These links are provided as a convenience and for informational purposes only. Inclusion of these hyperlinks does not constitute an endorsement or an approval by Vishay of any of the products, services or opinions of the corporation, organization or individual associated with the third-party website. Vishay disclaims any and all liability and bears no responsibility for the accuracy, legality or content of the third-party website or for that of subsequent links.

Except as expressly indicated in writing, Vishay products are not designed for use in medical, life-saving, or life-sustaining applications or for any other application in which the failure of the Vishay product could result in personal injury or death. Customers using or selling Vishay products not expressly indicated for use in such applications do so at their own risk. Please contact authorized Vishay personnel to obtain written terms and conditions regarding products designed for such applications.

No license, express or implied, by estoppel or otherwise, to any intellectual property rights is granted by this document or by any conduct of Vishay. Product names and markings noted herein may be trademarks of their respective owners.

© 2024 VISHAY INTERTECHNOLOGY, INC. ALL RIGHTS RESERVED