DIP-6A

PACKAGE DIMENSIONS in inches (millimeters)

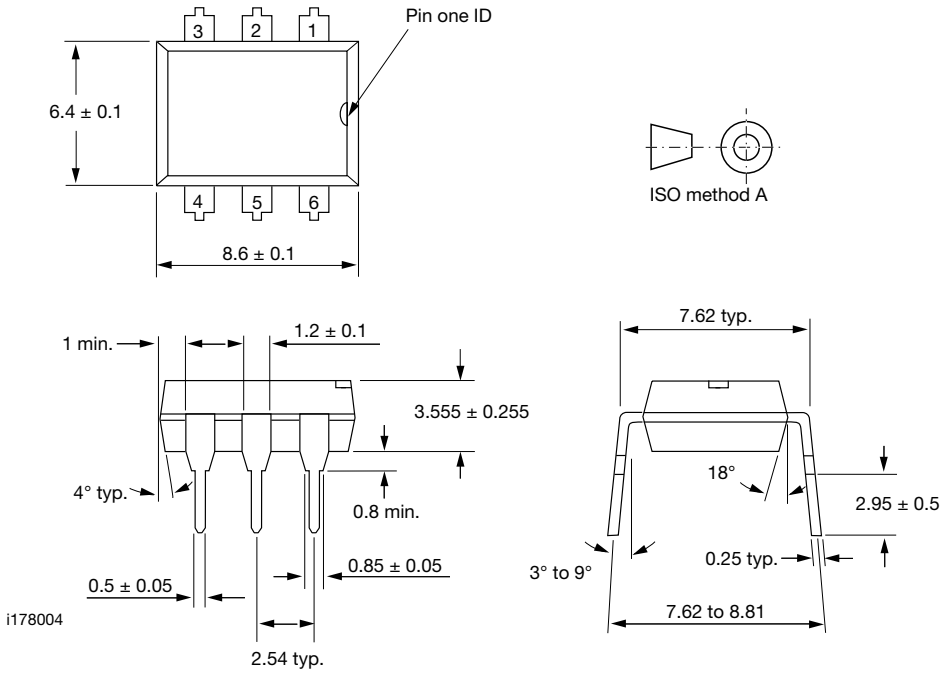

Note

The information in this document provides generic information but for specific information on a product the appropriate product datasheet should be used.

For technical questions, contact: optocoupler.answers@vishay.com
THIS DOCUMENT IS SUBJECT TO CHANGE WITHOUT NOTICE. THE PRODUCTS DESCRIBED HEREIN AND THIS DOCUMENT ARE SUBJECT TO SPECIFIC DISCLAIMERS, SET FORTH AT www.vishay.com/doc?91000