High Speed Infrared Emitting Diode, 940 nm, GaAlAs Double Hetero

21531

FEATURES

- Package type: surface mount
- Package form: 0805
- Dimensions (L x W x H in mm): 2 x 1.25 x 0.85
- AEC-Q101 qualified
- Enhanced operating temperature range: -40 °C to +105 °C
- Peak wavelength: λ_p = 940 nm
- High reliability
- High radiant power
- High radiant intensity
- High speed
- Angle of half sensitivity: φ = ± 60°
- Low forward voltage
- Suitable for high pulse current operation
- 0805 standard surface-mountable package
- Floor life: 72 h, MSL 4, according to J-STD-020
- Lead (Pb)-free reflow soldering
- Material categorization: for definitions of compliance please see www.vishay.com/doc?99912

AUTOMOTIVE GRADE
Pb-free
e4
RoHS COMPLIANT
HALOGEN FREE
GREEN (5-2008)

DESCRIPTION

VSMB1940ITX01 is an infrared, 940 nm emitting diode in GaAlAs double hetero technology with high radiant power and high speed, molded in clear, untinted 0805 plastic package for surface mounting (SMD).

APPLICATIONS

- IR emitter for automotive applications
- High power emitter for low space applications
- High performance transmissive or reflective sensors

PRODUCT SUMMARY

COMPONENT	I_e (mW/sr)	φ (deg)	λ_p (nm)	t_r (ns)
VSMB1940ITX01	6	± 60	940	15

Note
- Test conditions see table “Basic Characteristics“

ORDERING INFORMATION

ORDERING CODE	PACKAGING	REMARKS	PACKAGE FORM
VSMB1940ITX01	Tape and reel	MOQ: 3000 pcs, 3000 pcs/reel	0805

Note
- MOQ: minimum order quantity

ABSOLUTE MAXIMUM RATINGS (T_{amb} = 25 °C, unless otherwise specified)

PARAMETER	TEST CONDITION	SYMBOL	VALUE	UNIT
Reverse voltage		V_R	5	V
Forward current		I_F	100	mA
Peak forward current	t_p/T = 0.5, t_p = 100 µs	I_{FM}	200	mA
Surge forward current	t_p = 100 µs	I_{FSM}	1	A
Power dissipation		P_V	160	mW
Junction temperature		T_j	110	°C
Operating temperature range		T_{amb}	-40 to +105	°C
Storage temperature range		T_{stg}	-40 to +110	°C
Soldering temperature	According to reflow profile Fig. 9	T_{sd}	260	°C
Thermal resistance junction / ambient	JESD 51	R_{thJA}	270	K/W

For technical questions, contact: emittertechsupport@vishay.com
THIS DOCUMENT IS SUBJECT TO CHANGE WITHOUT NOTICE. THE PRODUCTS DESCRIBED HEREIN AND THIS DOCUMENT ARE SUBJECT TO SPECIFIC DISCLAIMERS, SET FORTH AT www.vishay.com/doc?91000

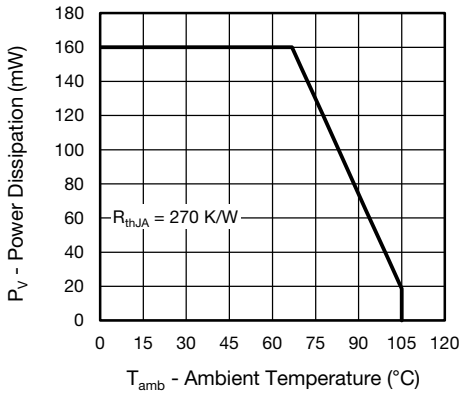

Fig. 1 - Power Dissipation Limit vs. Ambient Temperature

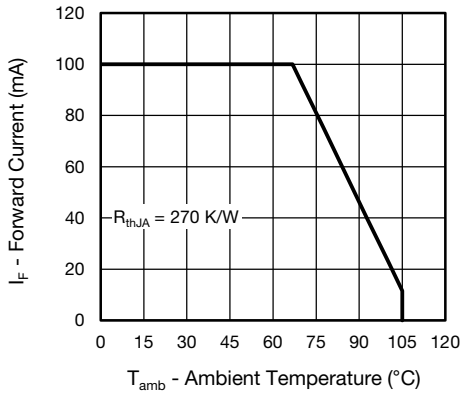

Fig. 2 - Forward Current Limit vs. Ambient Temperature

BASIC CHARACTERISTICS (T_{amb} = 25 °C, unless otherwise specified)						
PARAMETER	**TEST CONDITION**	**SYMBOL**	**MIN.**	**TYP.**	**MAX.**	**UNIT**
Forward voltage	I_F = 100 mA, t_p = 20 ms	V_F	1.15	1.35	1.6	V
	I_F = 1 A, t_p = 100 µs	V_F	-	2.2	-	V
Temperature coefficient of V_F	I_F = 1 mA	TK_{VF}	-	-1.5	-	mV/K
	I_F = 100 mA	TK_{VF}	-	-1.1	-	mV/K
Reverse current	V_R = 5 V	I_R	-	-	10	µA
Junction capacitance	V_R = 0 V, f = 1 MHz, E = 0 mW/cm^2	C_J	-	70	-	pF
Radiant intensity	I_F = 100 mA, t_p = 20 ms	I_e	3	6	12	mW/sr
	I_F = 1 A, t_p = 100 µs	I_e	-	60	-	mW/sr
Radiant power	I_F = 100 mA, t_p = 20 ms	ϕe	-	40	-	mW
Temperature coefficient of radiant power	I_F = 1 mA	$TK\phi_e$	-	-1.1	-	%/K
	I_F = 100 mA	$TK\phi_e$	-	-0.51	-	%/K
Angle of half intensity		φ	-	± 60	-	deg
Peak wavelength	I_F = 30 mA	λ_p	-	940	-	nm
Spectral bandwidth	I_F = 30 mA	$\Delta\lambda$	-	25	-	nm
Temperature coefficient of λ_p	I_F = 30 mA	$TK_{\lambda p}$	-	0.25	-	nm
Rise time	I_F = 100 mA, 20 % to 80 %	t_r	-	15	-	ns
Fall time	I_F = 100 mA, 20 % to 80 %	t_f	-	15	-	ns
Virtual source diameter		d	-	0.5	-	mm

For technical questions, contact: emittertechsupport@vishay.com
THIS DOCUMENT IS SUBJECT TO CHANGE WITHOUT NOTICE. THE PRODUCTS DESCRIBED HEREIN AND THIS DOCUMENT ARE SUBJECT TO SPECIFIC DISCLAIMERS, SET FORTH AT www.vishay.com/doc?91000

BASIC CHARACTERISTICS (T_{amb} = 25 °C, unless otherwise specified)

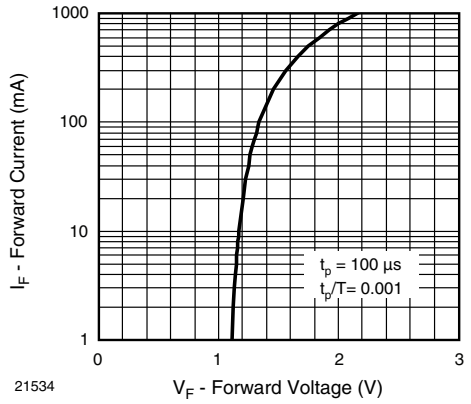

Fig. 3 - Forward Current vs. Forward Voltage

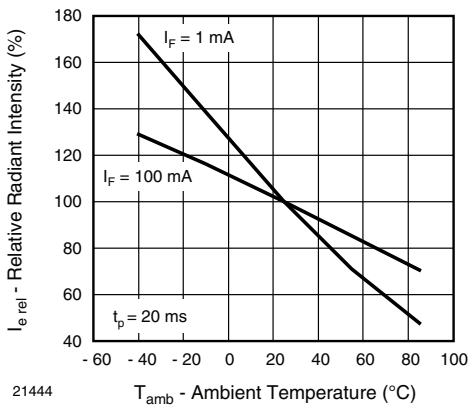

Fig. 6 - Relative Radiant Intensity vs. Ambient Temperature

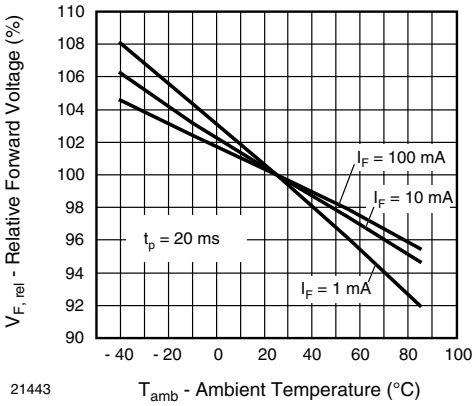

Fig. 4 - Relative Forward Voltage vs. Ambient Temperature

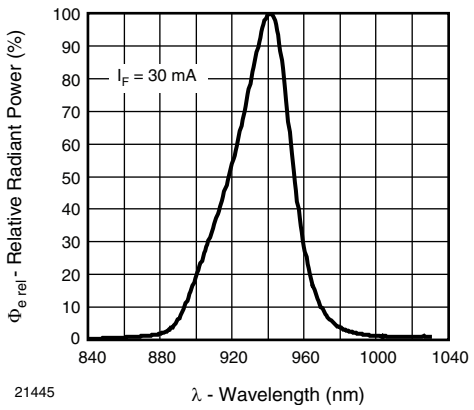

Fig. 7 - Relative Radiant Power vs. Wavelength

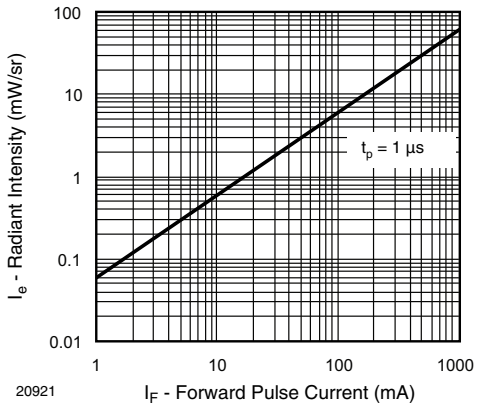

Fig. 5 - Radiant Intensity vs. Forward Current

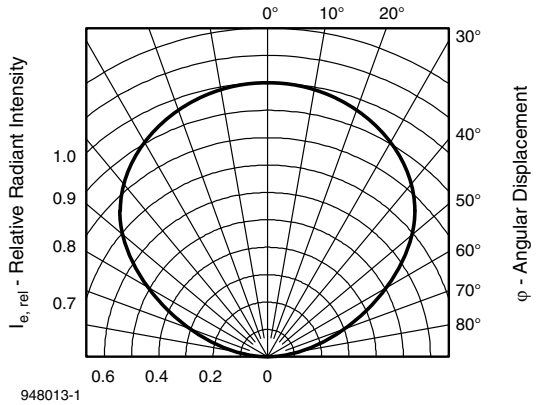

Fig. 8 - Relative Radiant Intensity vs. Angular Displacement

For technical questions, contact: emittertechsupport@vishay.com
THIS DOCUMENT IS SUBJECT TO CHANGE WITHOUT NOTICE. THE PRODUCTS DESCRIBED HEREIN AND THIS DOCUMENT ARE SUBJECT TO SPECIFIC DISCLAIMERS, SET FORTH AT www.vishay.com/doc?91000

REFLOW SOLDER PROFIEL

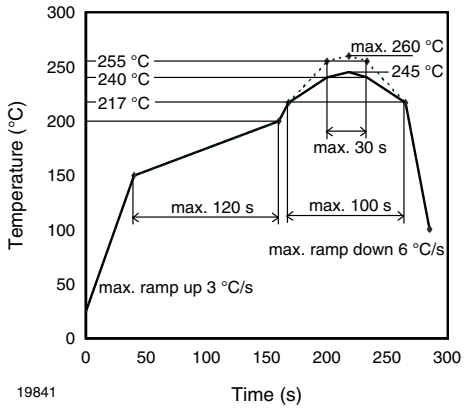

Fig. 9 - Lead (Pb)-free Reflow Solder Profile According to J-STD-020

DRYPACK

Devices are packed in moisture barrier bags (MBB) to prevent the products from moisture absorption during transportation and storage. Each bag contains a desiccant.

FLOOR LIFE

Time between soldering and removing from MBB must not exceed the time indicated in J-STD-020:

Moisture sensitivity: level 4

Floor life: 72 h

Conditions: T_{amb} < 30 °C, RH < 60 %

DRYING

In case of moisture absorption devices should be baked before soldering. Conditions see J-STD-020 or label. Devices taped on reel dry using recommended conditions 192 h at 40 °C (+ 5 °C), RH < 5 %.

PACKAGE DIMENSIONS in millimeters

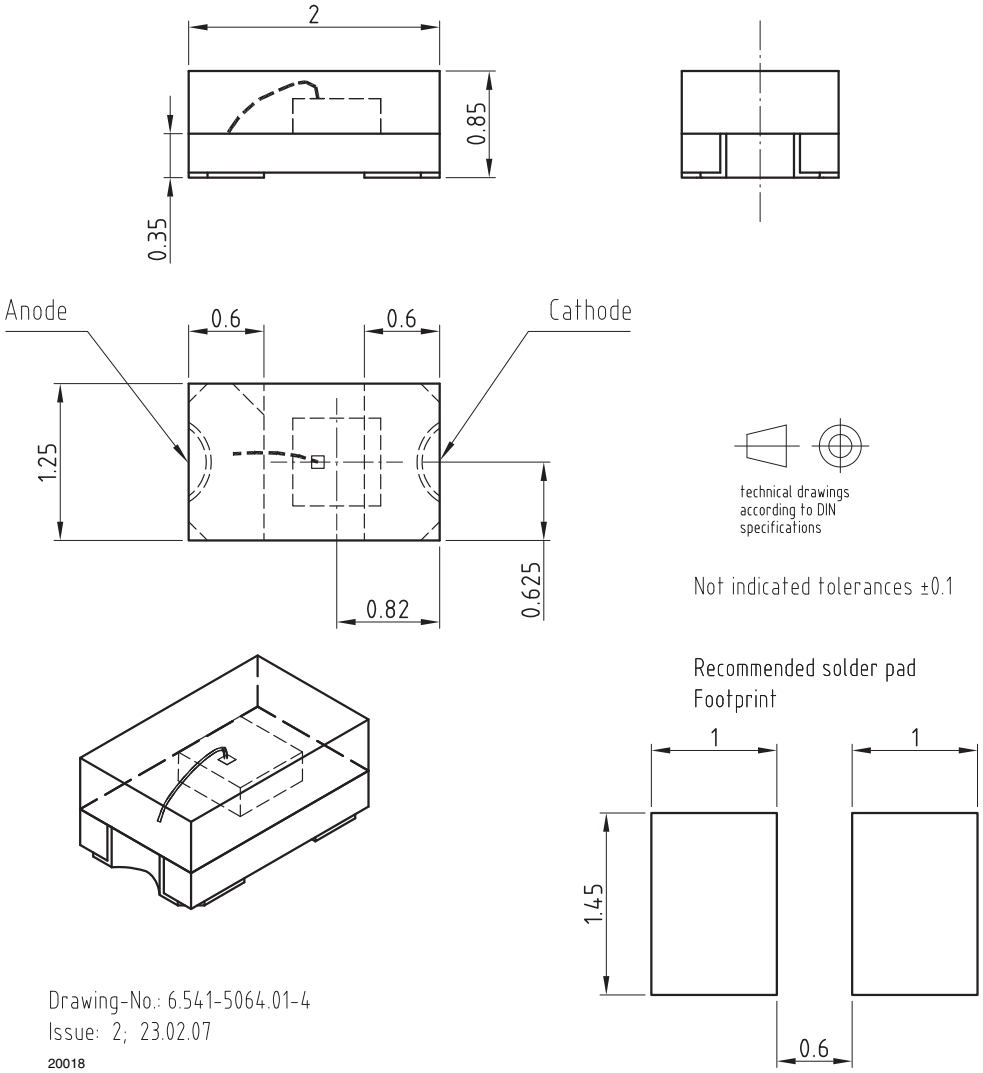

For technical questions, contact: emittertechsupport@vishay.com
THIS DOCUMENT IS SUBJECT TO CHANGE WITHOUT NOTICE. THE PRODUCTS DESCRIBED HEREIN AND THIS DOCUMENT ARE SUBJECT TO SPECIFIC DISCLAIMERS, SET FORTH AT www.vishay.com/doc?91000

BLISTER TAPE DIMENSIONS in millimeters

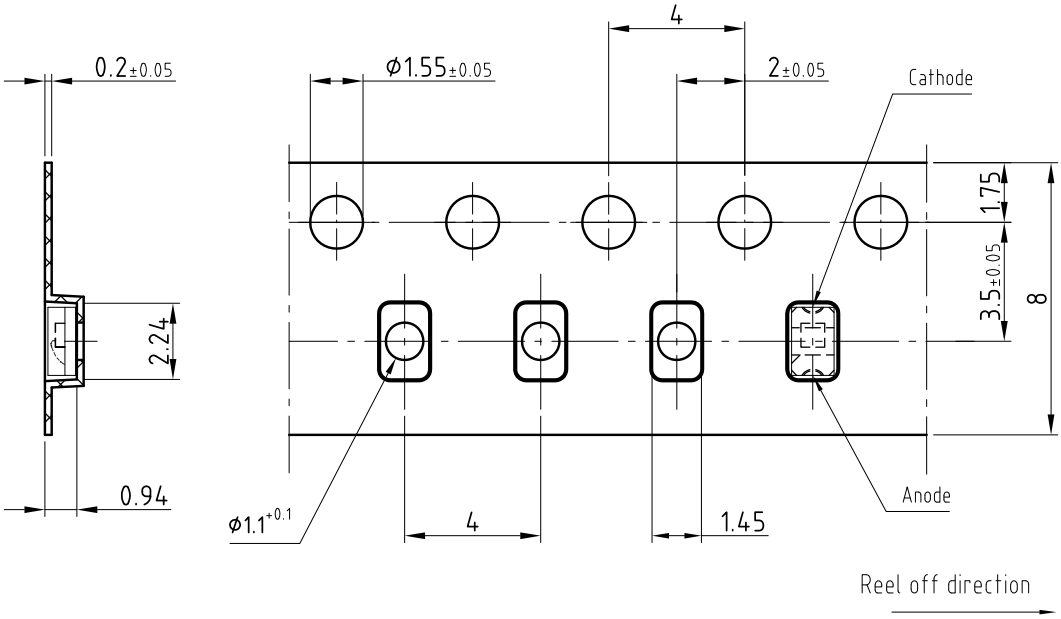

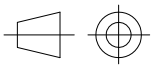

technical drawings
according to DIN
specifications

Drawing-No.: 9.700-5311.01-4
Issue: 1; 23.02.07
21501

Not indicated tolerances ±0.1

For technical questions, contact: emittertechsupport@vishay.com
THIS DOCUMENT IS SUBJECT TO CHANGE WITHOUT NOTICE. THE PRODUCTS DESCRIBED HEREIN AND THIS DOCUMENT ARE SUBJECT TO SPECIFIC DISCLAIMERS, SET FORTH AT www.vishay.com/doc?91000

REEL DIMENSIONS in millimeters

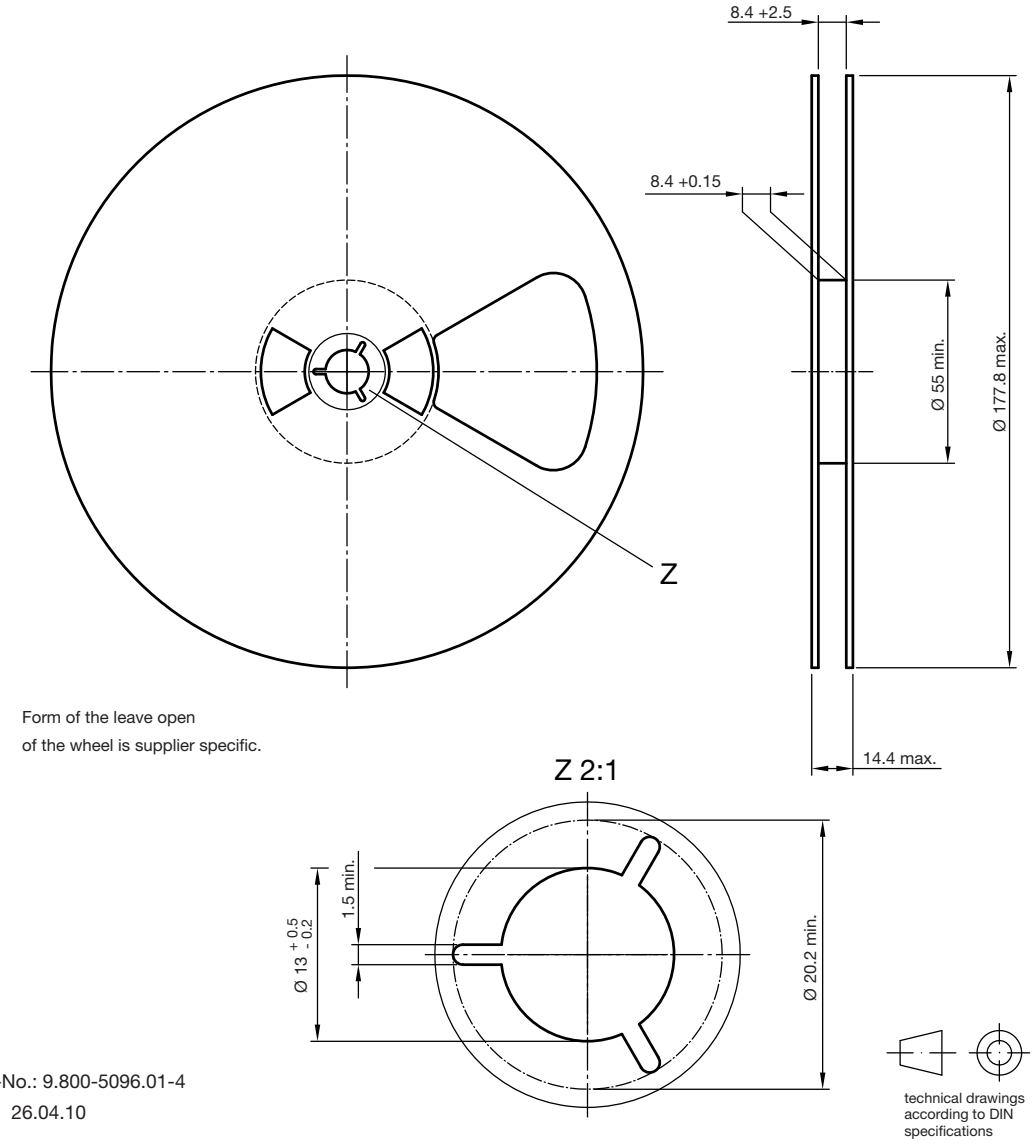

Drawing-No.: 9.800-5096.01-4
Issue: 2; 26.04.10
20875

For technical questions, contact: emittertechsupport@vishay.com
THIS DOCUMENT IS SUBJECT TO CHANGE WITHOUT NOTICE. THE PRODUCTS DESCRIBED HEREIN AND THIS DOCUMENT ARE SUBJECT TO SPECIFIC DISCLAIMERS, SET FORTH AT www.vishay.com/doc?91000

Disclaimer

ALL PRODUCT, PRODUCT SPECIFICATIONS AND DATA ARE SUBJECT TO CHANGE WITHOUT NOTICE TO IMPROVE RELIABILITY, FUNCTION OR DESIGN OR OTHERWISE.

Vishay Intertechnology, Inc., its affiliates, agents, and employees, and all persons acting on its or their behalf (collectively, “Vishay”), disclaim any and all liability for any errors, inaccuracies or incompleteness contained in any datasheet or in any other disclosure relating to any product.

Vishay makes no warranty, representation or guarantee regarding the suitability of the products for any particular purpose or the continuing production of any product. To the maximum extent permitted by applicable law, Vishay disclaims (i) any and all liability arising out of the application or use of any product, (ii) any and all liability, including without limitation special, consequential or incidental damages, and (iii) any and all implied warranties, including warranties of fitness for particular purpose, non-infringement and merchantability.

Statements regarding the suitability of products for certain types of applications are based on Vishay's knowledge of typical requirements that are often placed on Vishay products in generic applications. Such statements are not binding statements about the suitability of products for a particular application. It is the customer's responsibility to validate that a particular product with the properties described in the product specification is suitable for use in a particular application. Parameters provided in datasheets and / or specifications may vary in different applications and performance may vary over time. All operating parameters, including typical parameters, must be validated for each customer application by the customer's technical experts. Product specifications do not expand or otherwise modify Vishay's terms and conditions of purchase, including but not limited to the warranty expressed therein.

Hyperlinks included in this datasheet may direct users to third-party websites. These links are provided as a convenience and for informational purposes only. Inclusion of these hyperlinks does not constitute an endorsement or an approval by Vishay of any of the products, services or opinions of the corporation, organization or individual associated with the third-party website. Vishay disclaims any and all liability and bears no responsibility for the accuracy, legality or content of the third-party website or for that of subsequent links.

Except as expressly indicated in writing, Vishay products are not designed for use in medical, life-saving, or life-sustaining applications or for any other application in which the failure of the Vishay product could result in personal injury or death. Customers using or selling Vishay products not expressly indicated for use in such applications do so at their own risk. Please contact authorized Vishay personnel to obtain written terms and conditions regarding products designed for such applications.

No license, express or implied, by estoppel or otherwise, to any intellectual property rights is granted by this document or by any conduct of Vishay. Product names and markings noted herein may be trademarks of their respective owners.

© 2024 VISHAY INTERTECHNOLOGY, INC. ALL RIGHTS RESERVED