About Avalanche Sinterglass Diodes

Vishay's avalanche Sinterglass diodes are specially designed for applications requiring high reliability and are suitable for storage and operating temperatures higher than any plastic package.

The combination of high reliability, reverse avalanche energy rating and soft recovery switching behaviour provides unique features for dedicated applications.

No other 1.0 A to 3.5 A diode of any kind - plastic or metal - can match Vishay's avalanche Sinterglass diodes combination of the following features a result of Vishay's unique Sinterglass construction:

Cross Section of Sinterglass Diodes Construction

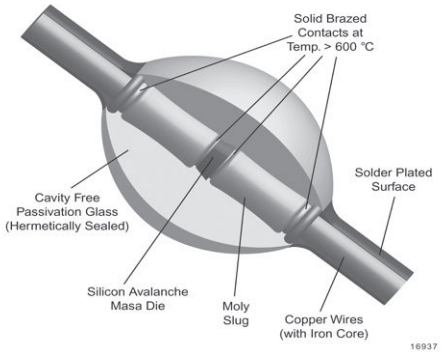

Fig. 1 - Cross Section of Sinterglass Diodes Construction

- Brazed at greater than 600 °C at both leads and die; eliminates all soft solders
- Hermetically-sealed package
- 100 % plastic-free construction
- Reverse avalanche energy rated
- Proven reliability to meet automotive requirements
- Very high reverse avalanche energy capability and therefore suited for series connection
- High reverse voltage up to 2400 V
- Low forward losses
- Low reverse losses
- Excellent reverse current stability at highest temperatures
- Low switching losses, due to fast / ultra fast reverse and forward recovery characteristics

Most other diodes rated up to 3.5 A are soft soldered with silicon rubber passivation or pressure contacted. Avalanche Sinterglass diodes use a brazed construction and glass passivation to hermetically seal its junction. To withstand the 600 °C, required to melt and fuse the glass, only high temperature brazing operations are used. This technique tremendously enhances mechanical strength and temperature cycling capability, increasing operating and storage temperature range while reducing thermal resistance. The avalanche Sinterglass diode will not go up in flames.

Avalanche Sinterglass diodes are the world's only diodes with totally brazed construction together with glass passivated junction and meets the most stringent reliability requirements.

These devices lend themselves to a wide variety of applications. They can withstand the harsh environment of the automotive world, meeting the long term reliability and specialized electrical performance requirements of the computer, consumer and telecommunication markets. The small size of the avalanche Sinterglass diode with its capability up to 3.5 A enables high density board layout in electronic assemblies and equipment, while increasing reliability.

We offer the avalanche Sinterglass diode as standard recovery, fast recovery and ultrafast recovery types in leaded packages up to 2400 V reverse voltage.

For technical questions within your region: DiodesAmericas@vishay.com, DiodesAsia@vishay.com, DiodesEurope@vishay.com
THIS DOCUMENT IS SUBJECT TO CHANGE WITHOUT NOTICE. THE PRODUCTS DESCRIBED HEREIN AND THIS DOCUMENT ARE SUBJECT TO SPECIFIC DISCLAIMERS, SET FORTH AT www.vishay.com/doc?91000