Surface-Mount Ultrafast Plastic Rectifier

SMC (DO-214AB)

Cathode ○—◀—○ Anode

LINKS TO ADDITIONAL RESOURCES

3D Models

FEATURES

- Glass passivated pellet chip junction
- Ideal for automated placement
- Ultrafast reverse recovery time
- Low switching losses, high efficiency
- High forward surge capability
- Meets MSL level 1, per J-STD-020, LF maximum peak of 260 °C
- Material categorization: for definitions of compliance please see www.vishay.com/doc?99912

RoHS COMPLIANT
HALOGEN FREE Available

TYPICAL APPLICATIONS

For use in high frequency rectification and freewheeling application in switching mode converters and inverters for consumer, computer, and telecommunication.

MECHANICAL DATA

Case: SMC (DO-214AB)
Molding compound meets UL 94 V-0 flammability rating
Base P/N-E3 - RoHS-compliant, commercial grade
Base P/N-M3 - halogen-free, RoHS-compliant, and commercial grade

Terminals: matte tin plated leads, solderable per J-STD-002 and JESD 22-B102
E3 and M3 suffix meets JESD 201 class 2 whisker test

Polarity: color band denotes cathode end

PRIMARY CHARACTERISTICS	
$I_{F(AV)}$	4.0 A
V_{RRM}	600 V
I_{FSM}	110 A
t_{rr}	50 ns
V_F at I_F = 4.0 A (T_A = 25 °C)	1.28 V
T_J max.	175 °C
Package	SMC (DO-214AB)
Circuit configuration	Single

MAXIMUM RATINGS (T_A = 25 °C unless otherwise noted)

PARAMETER	SYMBOL	MURS460	UNIT
Device marking code		4MJ	
Maximum repetitive peak reverse voltage	V_{RRM}	600	V
Working peak reverse voltage	V_{RWM}	600	V
Maximum DC blocking voltage	V_{DC}	600	V
Maximum average forward rectified current	$I_{F(AV)}$ (1)	2.4	A
	$I_{F(AV)}$ (2)	4.0	
Peak forward surge current 8.3 ms single half sine-wave superimposed on rated load	I_{FSM}	110	A
Peak forward surge current 1 ms single half sine-wave superimposed on rated load	I_{FSM}	220	A
Operating junction and storage temperature range	T_J, T_{STG}	-55 to +175	°C

Notes
(1) Free air, mounted on recommended copper pad area
(2) Mounted on 25 mm x 25 mm pad area

For technical questions within your region: DiodesAmericas@vishay.com, DiodesAsia@vishay.com, DiodesEurope@vishay.com
THIS DOCUMENT IS SUBJECT TO CHANGE WITHOUT NOTICE. THE PRODUCTS DESCRIBED HEREIN AND THIS DOCUMENT ARE SUBJECT TO SPECIFIC DISCLAIMERS, SET FORTH AT www.vishay.com/doc?91000

ELECTRICAL CHARACTERISTICS (T_A = 25 °C unless otherwise noted)					
PARAMETER	**TEST CONDITIONS**		**SYMBOL**	**MURS460**	**UNIT**
Maximum instantaneous forward voltage	I_F = 3.0 A	T_A = 25 °C	V_F (1)	1.25	V
	I_F = 4.0 A			1.28	
	I_F = 3.0 A	T_A = 150 °C		1.05	
Maximum instantaneous reverse current at rated DC blocking voltage	V_R = 600 V	T_A = 25 °C	I_R (2)	10	μA
		T_A = 150 °C		250	
Maximum reverse recovery time	I_F = 0.5 A, I_R = 1.0 A, I_{rr} = 0.25 A		t_{rr}	50	ns
	I_F = 1.0 A, dI/dt = 50 A/μs, V_R = 30 V, I_{rr} = 10 % I_{RM}			75	

Notes

(1) Pulse test: t_p = 300 μs, duty cycle ≤ 2 %

(2) Pulse test: pulse width ≤ 40 ms

THERMAL CHARACTERISTICS (T_A = 25 °C unless otherwise noted)			
PARAMETER	**SYMBOL**	**MURS460**	**UNIT**
Typical thermal resistance	$R_{\theta JA}$ (1)(2)	85	°C/W
	$R_{\theta JM}$ (1)(2)(3)	12	

Notes

(1) The heat generated must be less than the thermal conductivity from junction-to-ambient: $dP_D/dT_J < 1/R_{\theta JA}$

(2) Free air, mounted on recommended copper pad area; thermal resistance $R_{\theta JA}$ – junction to ambient and R_{thJM} - junction to mount

(3) Mounted on 25 mm x 25 mm pad area

ORDERING INFORMATION (Example)				
PREFERRED P/N	**UNIT WEIGHT (g)**	**PREFERRED PACKAGE CODE**	**BASE QUANTITY**	**DELIVERY MODE**
MURS460-E3/H	0.211	H	850	7" diameter plastic tape and reel
MURS460-E3/I	0.211	I	3500	13" diameter plastic tape and reel
MURS460-M3/H	0.211	H	850	7" diameter plastic tape and reel
MURS460-M3/I	0.211	I	3500	13" diameter plastic tape and reel

For technical questions within your region: DiodesAmericas@vishay.com, DiodesAsia@vishay.com, DiodesEurope@vishay.com
THIS DOCUMENT IS SUBJECT TO CHANGE WITHOUT NOTICE. THE PRODUCTS DESCRIBED HEREIN AND THIS DOCUMENT ARE SUBJECT TO SPECIFIC DISCLAIMERS, SET FORTH AT www.vishay.com/doc?91000

RATINGS AND CHARACTERISTICS CURVES (T_A = 25 °C unless otherwise noted)

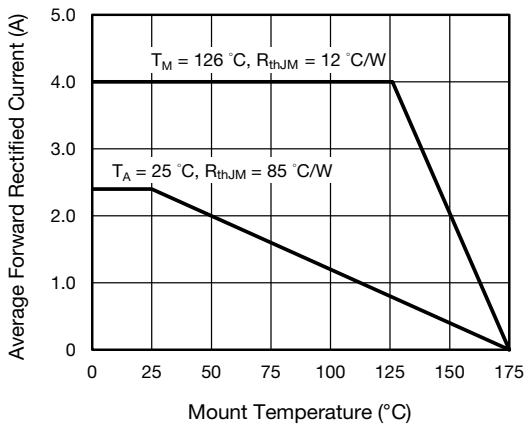

Fig. 1 - Forward Current Derating Curve

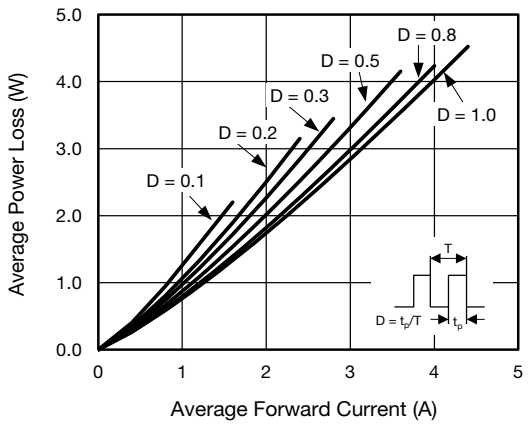

Fig. 2 - Maximum Non-Repetitive Peak Forward Surge Current

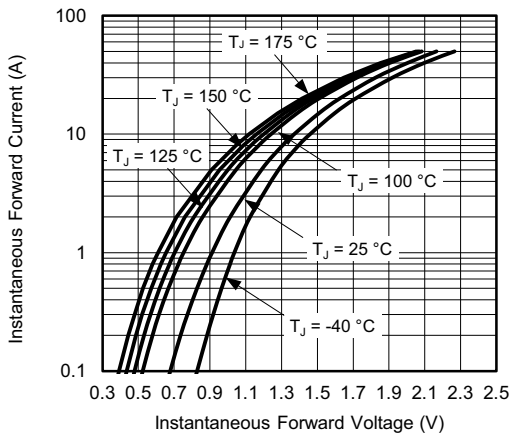

Fig. 3 - Typical Instantaneous Forward Characteristics

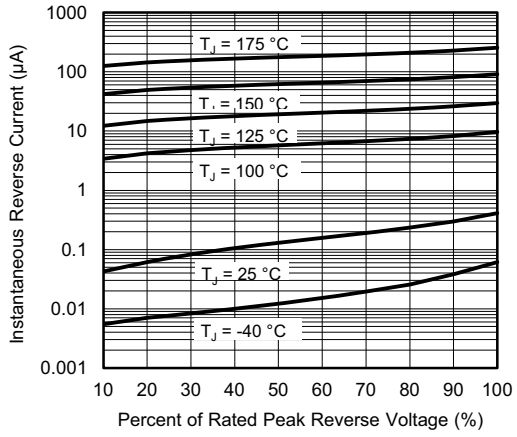

Fig. 4 - Typical Reverse Characteristics

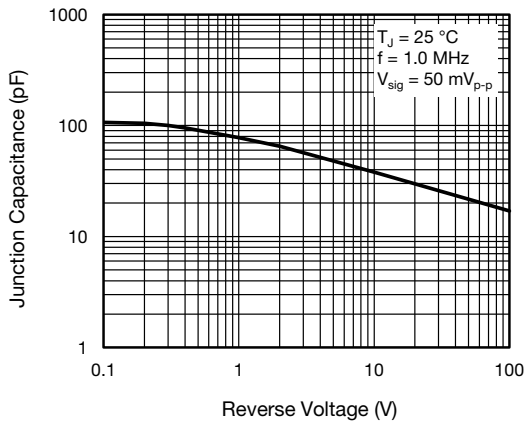

Fig. 5 - Typical Junction Capacitance

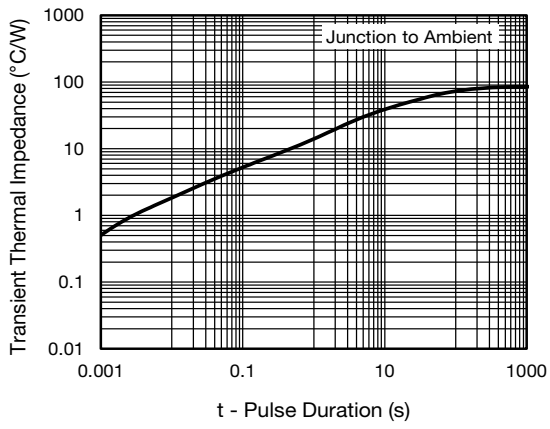

Fig. 6 - Transient Thermal Impedance

For technical questions within your region: DiodesAmericas@vishay.com, DiodesAsia@vishay.com, DiodesEurope@vishay.com
THIS DOCUMENT IS SUBJECT TO CHANGE WITHOUT NOTICE. THE PRODUCTS DESCRIBED HEREIN AND THIS DOCUMENT ARE SUBJECT TO SPECIFIC DISCLAIMERS, SET FORTH AT www.vishay.com/doc?91000

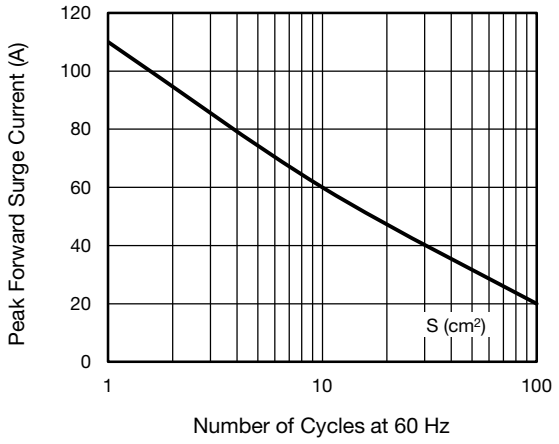

Fig. 7 - Peak Forward Surge Current

PACKAGE OUTLINE DIMENSIONS in inches (millimeters)

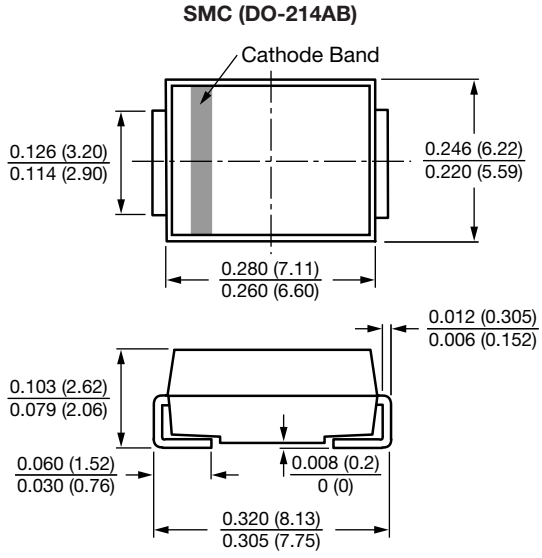

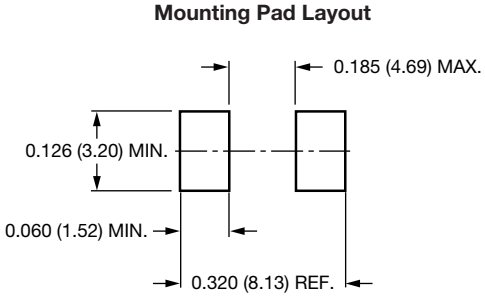

For technical questions within your region: DiodesAmericas@vishay.com, DiodesAsia@vishay.com, DiodesEurope@vishay.com
THIS DOCUMENT IS SUBJECT TO CHANGE WITHOUT NOTICE. THE PRODUCTS DESCRIBED HEREIN AND THIS DOCUMENT ARE SUBJECT TO SPECIFIC DISCLAIMERS, SET FORTH AT www.vishay.com/doc?91000

Disclaimer

ALL PRODUCT, PRODUCT SPECIFICATIONS AND DATA ARE SUBJECT TO CHANGE WITHOUT NOTICE TO IMPROVE RELIABILITY, FUNCTION OR DESIGN OR OTHERWISE.

Vishay Intertechnology, Inc., its affiliates, agents, and employees, and all persons acting on its or their behalf (collectively, “Vishay”), disclaim any and all liability for any errors, inaccuracies or incompleteness contained in any datasheet or in any other disclosure relating to any product.

Vishay makes no warranty, representation or guarantee regarding the suitability of the products for any particular purpose or the continuing production of any product. To the maximum extent permitted by applicable law, Vishay disclaims (i) any and all liability arising out of the application or use of any product, (ii) any and all liability, including without limitation special, consequential or incidental damages, and (iii) any and all implied warranties, including warranties of fitness for particular purpose, non-infringement and merchantability.

Statements regarding the suitability of products for certain types of applications are based on Vishay's knowledge of typical requirements that are often placed on Vishay products in generic applications. Such statements are not binding statements about the suitability of products for a particular application. It is the customer's responsibility to validate that a particular product with the properties described in the product specification is suitable for use in a particular application. Parameters provided in datasheets and / or specifications may vary in different applications and performance may vary over time. All operating parameters, including typical parameters, must be validated for each customer application by the customer's technical experts. Product specifications do not expand or otherwise modify Vishay's terms and conditions of purchase, including but not limited to the warranty expressed therein.

Hyperlinks included in this datasheet may direct users to third-party websites. These links are provided as a convenience and for informational purposes only. Inclusion of these hyperlinks does not constitute an endorsement or an approval by Vishay of any of the products, services or opinions of the corporation, organization or individual associated with the third-party website. Vishay disclaims any and all liability and bears no responsibility for the accuracy, legality or content of the third-party website or for that of subsequent links.

Except as expressly indicated in writing, Vishay products are not designed for use in medical, life-saving, or life-sustaining applications or for any other application in which the failure of the Vishay product could result in personal injury or death. Customers using or selling Vishay products not expressly indicated for use in such applications do so at their own risk. Please contact authorized Vishay personnel to obtain written terms and conditions regarding products designed for such applications.

No license, express or implied, by estoppel or otherwise, to any intellectual property rights is granted by this document or by any conduct of Vishay. Product names and markings noted herein may be trademarks of their respective owners.

© 2024 VISHAY INTERTECHNOLOGY, INC. ALL RIGHTS RESERVED