# High Current Density Surface-Mount TMBS® (Trench MOS Barrier Schottky) Rectifier

Ultra Low $V_F$ = 0.43 V at $I_F$ = 5 A

eSMP® Series

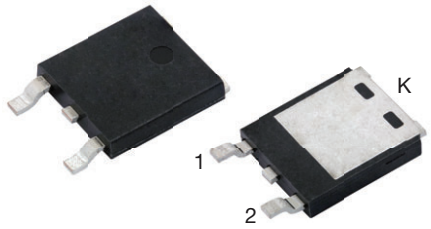


SlimDPAK (TO-252AE)

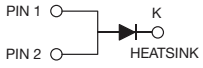


## FEATURES

- Very low profile - typical height of 1.3 mm
- Trench MOS Schottky technology
- Ideal for automated placement
- Low forward voltage drop, low power losses
- High efficiency operation
- Meets MSL level 1, per J-STD-020, LF maximum peak of 260 °C
- AEC-Q101 qualified available
  - Automotive ordering code: base P/NHM3
- Material categorization: for definitions of compliance please see www.vishay.com/doc?99912

AUTOMOTIVE GRADE Available

RoHS COMPLIANT

HALOGEN FREE

## LINKS TO ADDITIONAL RESOURCES

3D Models

## TYPICAL APPLICATIONS

For use in low voltage high frequency DC/DC converters, freewheeling diodes, and polarity protection applications.

## MECHANICAL DATA

**Case:** SlimDPAK (TO-252AE)
Molding compound meets UL 94 V-0 flammability rating
Base P/N-M3 - halogen-free, RoHS-compliant
Base P/NHM3 - halogen-free, RoHS-compliant, and AEC-Q101 qualified

**Terminals:** matte tin plated leads, solderable per J-STD-002 and JESD 22-B102
M3 and HM3 suffix meets JESD 201 class 2 whisker test

| PRIMARY CHARACTERISTICS | |
|---|---|
| $I_{F(AV)}$ | 20 A |
| $V_{RRM}$ | 100 V |
| $I_{FSM}$ | 200 A |
| $V_F$ at $I_F$ = 20 A ($T_A$ = 125 °C) | 0.69 V |
| $T_J$ max. | 150 °C |
| Package | SlimDPAK (TO-252AE) |
| Circuit configuration | Single |

**MAXIMUM RATINGS** ($T_A$ = 25 °C unless otherwise noted)

| PARAMETER | SYMBOL | V20PW10 | UNIT |
|---|---|---|---|
| Device marking code | | V20PW10 | |
| Maximum repetitive peak reverse voltage | $V_{RRM}$ | 100 | V |
| Maximum average forward rectified current (Fig. 1) | $I_{F(AV)}$ (1) | 20 | A |
| Peak forward surge current 8.3 ms single half sine-wave superimposed on rated load | $I_{FSM}$ | 200 | A |
| Operating junction temperature range | $T_J$ (2) | -40 to +150 | °C |
| Storage temperature range | $T_{STG}$ | -55 to +150 | °C |

**Notes**

(1) With infinite heatsink

(2) The heat generated must be less than the thermal conductivity from junction to ambient: $dP_D/dT_J < 1/R_{\theta JA}$



For technical questions within your region: DiodesAmericas@vishay.com, DiodesAsia@vishay.com, DiodesEurope@vishay.com

THIS DOCUMENT IS SUBJECT TO CHANGE WITHOUT NOTICE. THE PRODUCTS DESCRIBED HEREIN AND THIS DOCUMENT ARE SUBJECT TO SPECIFIC DISCLAIMERS, SET FORTH AT www.vishay.com/doc?91000

| **ELECTRICAL CHARACTERISTICS** ($T_A$ = 25 °C unless otherwise noted) | | | | | | |
|---|---|---|---|---|---|---|
| **PARAMETER** | **TEST CONDITIONS** | | **SYMBOL** | **TYP.** | **MAX.** | **UNIT** |
| Maximum Instantaneous forward voltage | $I_F$ = 5.0 A | $T_A$ = 25 °C | $V_F$ (1) | 0.50 | - | V |
| | $I_F$ = 10 A | | | 0.60 | - | |
| | $I_F$ = 20 A | | | 0.78 | 0.86 | |
| | $I_F$ = 5.0 A | $T_A$ = 125 °C | | 0.43 | - | |
| | $I_F$ = 10 A | | | 0.55 | - | |
| | $I_F$ = 20 A | | | 0.69 | 0.77 | |
| Reverse current | $V_R$ = 70 V | $T_A$ = 25 °C | $I_R$ (2) | 0.02 | - | mA |
| | | $T_A$ = 125 °C | | 8 | - | |
| | $V_R$ = 100 V | $T_A$ = 25 °C | | - | 0.5 | |
| | | $T_A$ = 125 °C | | 16 | 35 | |
| Typical junction capacitance | 4.0 V, 1 MHz | | $C_J$ | 1510 | - | pF |

**Notes**

(1) Pulse test: 300 μs pulse width, 1 % duty cycle

(2) Pulse test: pulse width ≤ 5 ms

| **THERMAL CHARACTERISTICS** ($T_A$ = 25 °C unless otherwise noted) | | | |
|---|---|---|---|
| **PARAMETER** | **SYMBOL** | **V20PW10** | **UNIT** |
| Typical thermal resistance | $R_{\theta JA}$ (1)(2) | 55 | °C/W |
| | $R_{\theta JM}$ (3) | 2.0 | |

**Notes**

(1) The heat generated must be less than thermal conductivity from junction-to-ambient: $dP_D/dT_J < 1/R_{\theta JA}$

(2) Free air, mounted on recommended copper pad area; thermal resistance $R_{\theta JA}$ - junction to ambient

(3) Mounted on infinite heat sink; thermal resistance $R_{\theta JM}$ - junction-to-mount

| **ORDERING INFORMATION** (Example) | | | | |
|---|---|---|---|---|
| **PREFERRED P/N** | **UNIT WEIGHT (g)** | **PREFERRED PACKAGE CODE** | **BASE QUANTITY** | **DELIVERY MODE** |
| V20PW10-M3/I | 0.20 | I | 4500 | 13" diameter plastic tape and reel |
| V20PW10HM3/I (1) | 0.20 | I | 4500 | 13" diameter plastic tape and reel |

**Note**

(1) AEC-Q101 qualified


For technical questions within your region: DiodesAmericas@vishay.com, DiodesAsia@vishay.com, DiodesEurope@vishay.com
THIS DOCUMENT IS SUBJECT TO CHANGE WITHOUT NOTICE. THE PRODUCTS DESCRIBED HEREIN AND THIS DOCUMENT ARE SUBJECT TO SPECIFIC DISCLAIMERS, SET FORTH AT www.vishay.com/doc?91000

**RATINGS AND CHARACTERISTICS CURVES** ($T_A$ = 25 °C unless otherwise noted)

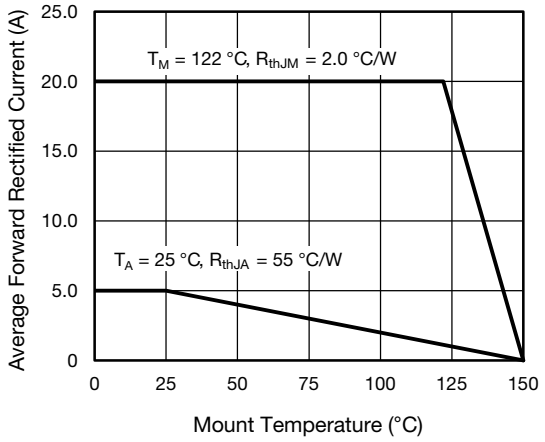


Fig. 1 - Maximum Forward Current Derating Curve

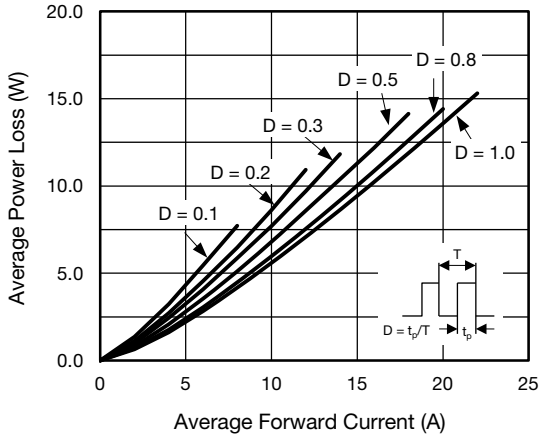


Fig. 2 - Forward Power Loss Characteristics

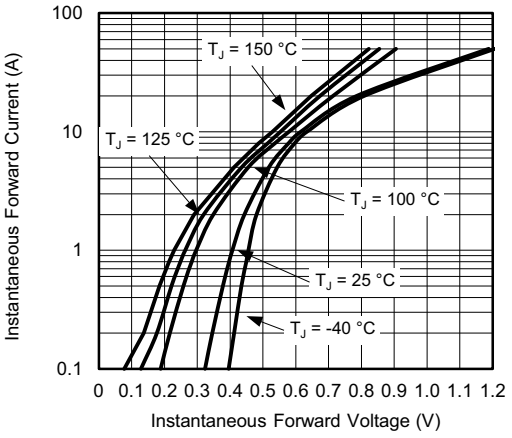


Fig. 3 - Typical Instantaneous Forward Characteristics

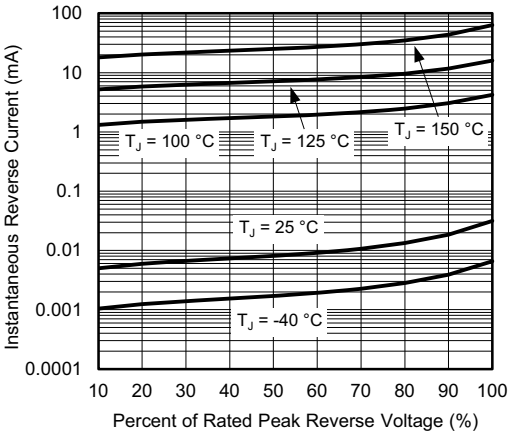


Fig. 4 - Typical Reverse Leakage Characteristics

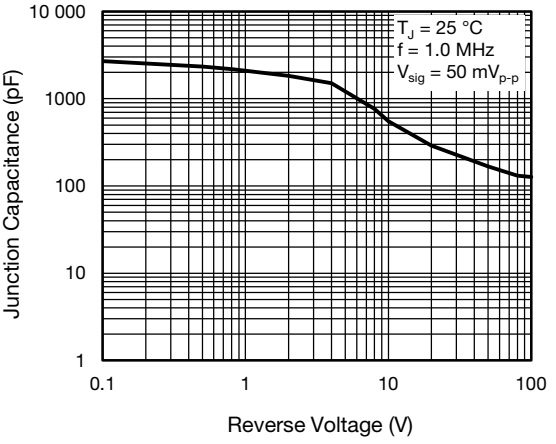


Fig. 5 - Typical Junction Capacitance

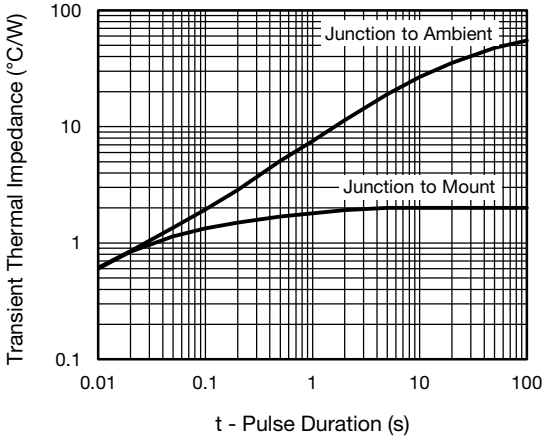


Fig. 6 - Typical Transient Thermal Impedance


For technical questions within your region: DiodesAmericas@vishay.com, DiodesAsia@vishay.com, DiodesEurope@vishay.com
THIS DOCUMENT IS SUBJECT TO CHANGE WITHOUT NOTICE. THE PRODUCTS DESCRIBED HEREIN AND THIS DOCUMENT ARE SUBJECT TO SPECIFIC DISCLAIMERS, SET FORTH AT www.vishay.com/doc?91000

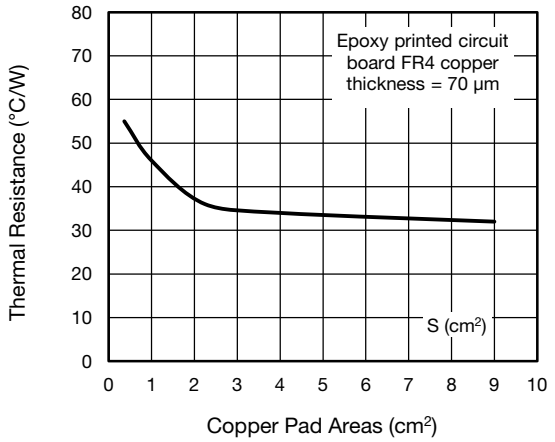


Fig. 7 - Typical Resistance Junction to Ambient vs. Copper Pad Areas

## **PACKAGE OUTLINE DIMENSIONS** in inches (millimeters)

**SlimDPAK (TO-252AE)**

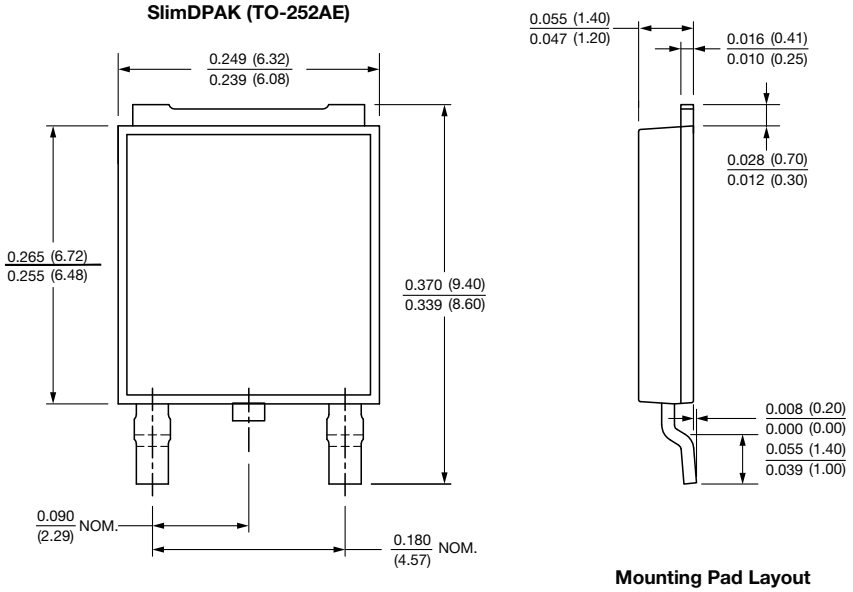


**Mounting Pad Layout**

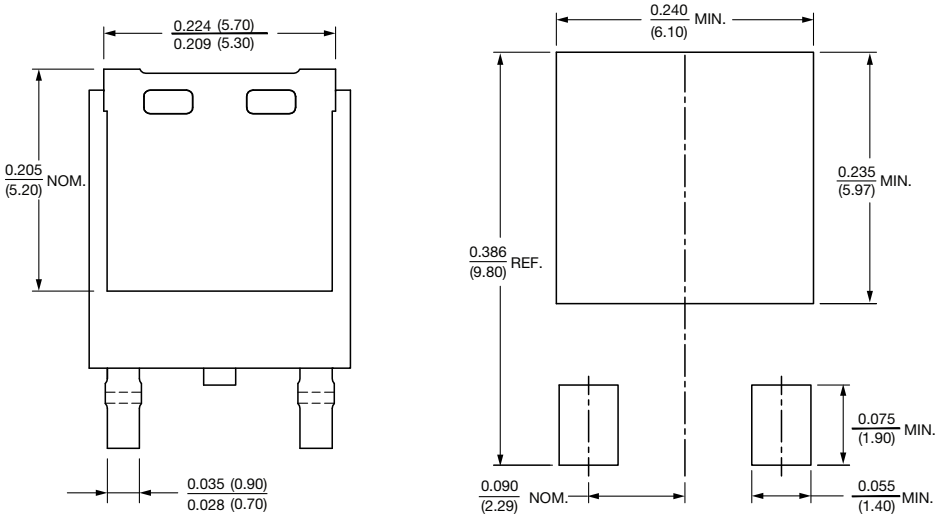



For technical questions within your region: DiodesAmericas@vishay.com, DiodesAsia@vishay.com, DiodesEurope@vishay.com
THIS DOCUMENT IS SUBJECT TO CHANGE WITHOUT NOTICE. THE PRODUCTS DESCRIBED HEREIN AND THIS DOCUMENT ARE SUBJECT TO SPECIFIC DISCLAIMERS, SET FORTH AT www.vishay.com/doc?91000

# Disclaimer

ALL PRODUCT, PRODUCT SPECIFICATIONS AND DATA ARE SUBJECT TO CHANGE WITHOUT NOTICE TO IMPROVE RELIABILITY, FUNCTION OR DESIGN OR OTHERWISE.

Vishay Intertechnology, Inc., its affiliates, agents, and employees, and all persons acting on its or their behalf (collectively, “Vishay”), disclaim any and all liability for any errors, inaccuracies or incompleteness contained in any datasheet or in any other disclosure relating to any product.

Vishay makes no warranty, representation or guarantee regarding the suitability of the products for any particular purpose or the continuing production of any product. To the maximum extent permitted by applicable law, Vishay disclaims (i) any and all liability arising out of the application or use of any product, (ii) any and all liability, including without limitation special, consequential or incidental damages, and (iii) any and all implied warranties, including warranties of fitness for particular purpose, non-infringement and merchantability.

Statements regarding the suitability of products for certain types of applications are based on Vishay's knowledge of typical requirements that are often placed on Vishay products in generic applications. Such statements are not binding statements about the suitability of products for a particular application. It is the customer's responsibility to validate that a particular product with the properties described in the product specification is suitable for use in a particular application. Parameters provided in datasheets and / or specifications may vary in different applications and performance may vary over time. All operating parameters, including typical parameters, must be validated for each customer application by the customer's technical experts. Product specifications do not expand or otherwise modify Vishay's terms and conditions of purchase, including but not limited to the warranty expressed therein.

Hyperlinks included in this datasheet may direct users to third-party websites. These links are provided as a convenience and for informational purposes only. Inclusion of these hyperlinks does not constitute an endorsement or an approval by Vishay of any of the products, services or opinions of the corporation, organization or individual associated with the third-party website. Vishay disclaims any and all liability and bears no responsibility for the accuracy, legality or content of the third-party website or for that of subsequent links.

Except as expressly indicated in writing, Vishay products are not designed for use in medical, life-saving, or life-sustaining applications or for any other application in which the failure of the Vishay product could result in personal injury or death. Customers using or selling Vishay products not expressly indicated for use in such applications do so at their own risk. Please contact authorized Vishay personnel to obtain written terms and conditions regarding products designed for such applications.

No license, express or implied, by estoppel or otherwise, to any intellectual property rights is granted by this document or by any conduct of Vishay. Product names and markings noted herein may be trademarks of their respective owners.

***© 2024 VISHAY INTERTECHNOLOGY, INC. ALL RIGHTS RESERVED***