Power MOSFET

Super-247

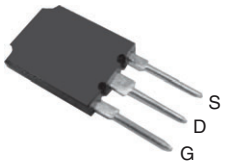

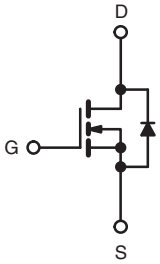

N-Channel MOSFET

PRODUCT SUMMARY		
V_{DS} (V)	500	
$R_{DS(on)}$ (Ω)	V_{GS} = 10 V	0.087
Q_g (Max.) (nC)	380	
Q_{gs} (nC)	80	
Q_{gd} (nC)	190	
Configuration	Single	

FEATURES

- Superfast body diode eliminates the need for External diodes in ZVS applications
- Lower gate charge results in simpler drive requirements
- Enhanced dV/dt capabilities offer improved ruggedness
- Higher gate voltage threshold offers improved noise immunity
- Material categorization: for definitions of compliance please see www.vishay.com/doc?99912

Pb-free
RoHS COMPLIANT
HALOGEN FREE

APPLICATIONS

- Zero voltage switching SMPS
- Telecom and server power supplies
- Uninterruptible power supplies
- Motor control applications

ORDERING INFORMATION	
Package	Super-247
Lead (Pb)-free and halogen free	SiHFPS40N50L-GE3

ABSOLUTE MAXIMUM RATINGS (T_C = 25 °C, unless otherwise noted)

PARAMETER			SYMBOL	LIMIT	UNIT
Drain-source voltage			V_{DS}	500	V
Gate-source voltage			V_{GS}	± 30	
Continuous drain current	V_{GS} at 10 V	T_C = 25 °C	I_D	46	A
		T_C = 100 °C		29	
Pulsed drain current [a]			I_{DM}	180	
Linear derating factor				4.3	W/°C
Single pulse avalanche energy [b]			E_{AS}	920	mJ
Repetitive avalanche current [a]			I_{AR}	46	A
Repetitive avalanche Energy [a]			E_{AR}	54	mJ
Maximum power dissipation	T_C = 25 °C		P_D	540	W
Peak diode recovery dV/dt [c]			dV/dt	34	V/ns
Operating junction and storage temperature range			T_J, T_{stg}	- 55 to + 150	°C
Soldering recommendations (peak temperature)	for 10 s			300 [d]	

Notes

a. Repetitive rating; pulse width limited by maximum junction temperature (see fig. 11)
b. Starting T_J = 25 °C, L = 0.86 mH, R_g = 25 Ω, I_{AS} = 46 A (see fig. 12)
c. $I_{SD} \leq$ 46 A, dI/dt $\leq$ 550 A/μs, $V_{DD} \leq V_{DS}$, $T_J \leq$ 150 °C
d. 1.6 mm from case

For technical questions, contact: hvm@vishay.com
THIS DOCUMENT IS SUBJECT TO CHANGE WITHOUT NOTICE. THE PRODUCTS DESCRIBED HEREIN AND THIS DOCUMENT ARE SUBJECT TO SPECIFIC DISCLAIMERS, SET FORTH AT www.vishay.com/doc?91000

THERMAL RESISTANCE RATINGS				
PARAMETER	**SYMBOL**	**TYP.**	**MAX.**	**UNIT**
Maximum junction-to-ambient [a]	R_{thJA}	-	40	°C/W
Case-to-sink, flat, greased surface	R_{thCS}	0.24	-	
Maximum junction-to-case (drain) [a]	R_{thJC}	-	0.23	

Note

a. R_{th} is measured at T_J approximately 90 °C

SPECIFICATIONS (T_J = 25 °C, unless otherwise noted)							
PARAMETER	**SYMBOL**	**TEST CONDITIONS**		**MIN.**	**TYP.**	**MAX.**	**UNIT**
Static							
Drain-source breakdown voltage	V_{DS}	V_{GS} = 0 V, I_D = 250 μA		500	-	-	V
V_{DS} temperature coefficient	$\Delta V_{DS}/T_J$	Reference to 25 °C, I_D = 1 mA		-	0.60	-	V/°C
Gate-source threshold voltage	$V_{GS(th)}$	V_{DS} = V_{GS}, I_D = 250 μA		3.0	-	5.0	V
Gate-source leakage	I_{GSS}	V_{GS} = ± 30 V		-	-	± 100	nA
Zero gate voltage drain current	I_{DSS}	V_{DS} = 500 V, V_{GS} = 0 V		-	-	50	μA
		V_{DS} = 400 V, V_{GS} = 0 V, T_J = 125 °C		-	-	2.0	mA
Drain-source on-state resistance	$R_{DS(on)}$	V_{GS} = 10 V	I_D = 28 A [b]	-	0.087	0.100	Ω
Forward transconductance	g_{fs}	V_{DS} = 50 V, I_D = 46 A		21	-	-	S
Dynamic							
Input capacitance	C_{iss}	V_{GS} = 0 V, V_{DS} = 25 V, f = 1.0 MHz, see fig. 5		-	8110	-	pF
Output capacitance	C_{oss}			-	960	-	
Reverse transfer capacitance	C_{rss}			-	130	-	
Output capacitance	C_{oss}	V_{GS} = 0 V	V_{DS} = 1.0 V, f = 1.0 MHz	-	11200	-	
			V_{DS} = 400 V, f = 1.0 MHz	-	240	-	
Effective output capacitance	C_{oss} eff.		V_{DS} = 0 V to 400 V [c]	-	440	-	
Effective output capacitance (energy related)	$C_{oss\ eff.}$ (ER)			-	310	-	
Total gate charge	Q_g	V_{GS} = 10 V	I_D = 46 A, V_{DS} = 400 V, see fig. 7 and 15 [b]	-	-	380	nC
Gate-source charge	Q_{gs}			-	-	80	
Gate-drain charge	Q_{gd}			-	-	190	
Internal gate resistance	R_g	f = 1 MHz, open drain		-	0.90	-	Ω
Turn-on delay time	$t_{d(on)}$	V_{DD} = 250 V, I_D = 46 A, R_g = 0.85 Ω, V_{GS} = 10 V, see fig. 14a and 14b [b]		-	27	-	ns
Rise time	t_r			-	170	-	
Turn-off delay time	$t_{d(off)}$			-	50	-	
Fall time	t_f			-	69	-	
Drain-source body diode characteristics							
Continuous source-drain diode current	I_S	MOSFET symbol showing the integral reverse p - n junction diode		-	-	46	A
Pulsed diode forward current [a]	I_{SM}			-	-	180	
Body diode voltage	V_{SD}	T_J = 25 °C, I_S = 46 A, V_{GS} = 0 V [b]		-	-	1.5	V
Body diode reverse recovery time	t_{rr}	T_J = 25 °C, I_F = 46 A		-	170	250	ns
		T_J = 125 °C, dI/dt = 100 A/μs [b]		-	220	330	
Body diode reverse recovery charge	Q_{rr}	T_J = 25 °C, I_S = 46 A, V_{GS} = 0 V [b]		-	705	1060	nC
		T_J = 125 °C, dI/dt = 100 A/μs [b]		-	1.3	2.0	
Reverse recovery current	I_{RRM}	T_J = 25 °C		-	9.0	-	A
Forward turn-on time	t_{on}	Intrinsic turn-on time is negligible (turn-on is dominated by L_S and L_D)					

Notes

a. Repetitive rating; pulse width limited by maximum junction temperature (see fig. 11)

b. Pulse width ≤ 400 μs; duty cycle ≤ 2 %

c. C_{oss} eff. is a fixed capacitance that gives the same charging time as C_{oss} while V_{DS} is rising from 0 % to 80 % V_{DS}
C_{oss} eff. (ER) is a fixed capacitance that stores the same energy as C_{oss} while V_{DS} is rising from 0 % to 80 % V_{DS}

THIS DOCUMENT IS SUBJECT TO CHANGE WITHOUT NOTICE. THE PRODUCTS DESCRIBED HEREIN AND THIS DOCUMENT ARE SUBJECT TO SPECIFIC DISCLAIMERS, SET FORTH AT www.vishay.com/doc?91000

TYPICAL CHARACTERISTICS (25 °C, unless otherwise noted)

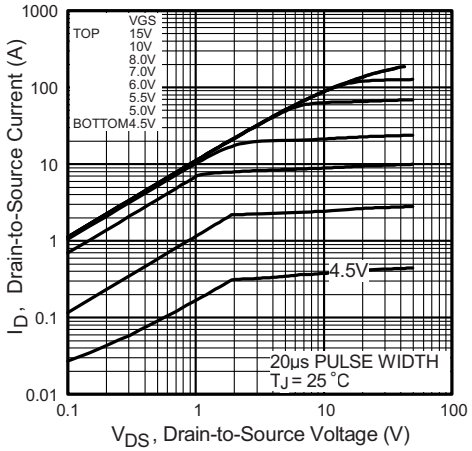

Fig. 1 - Typical Output Characteristics

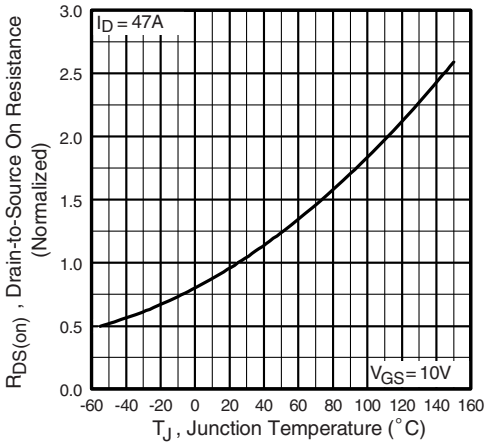

Fig. 4 - Normalized On-Resistance vs. Temperature

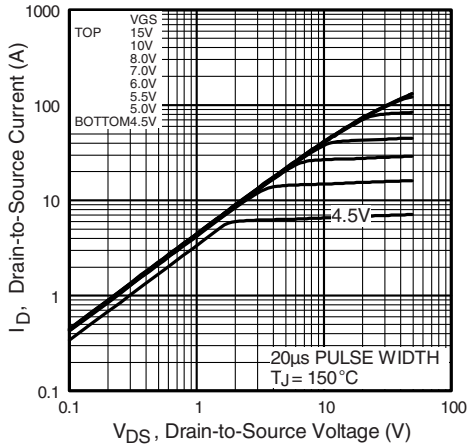

Fig. 2 - Typical Output Characteristics

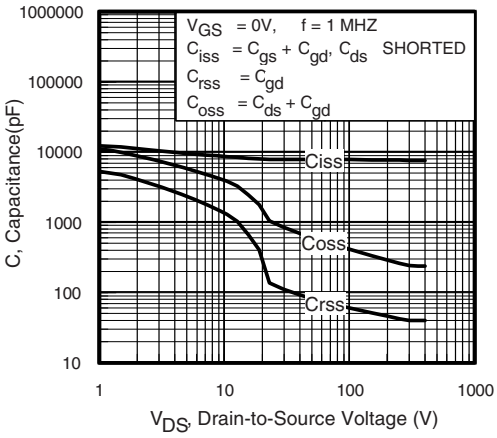

Fig. 5 - Typical Capacitance vs. Drain-to-Source Voltage

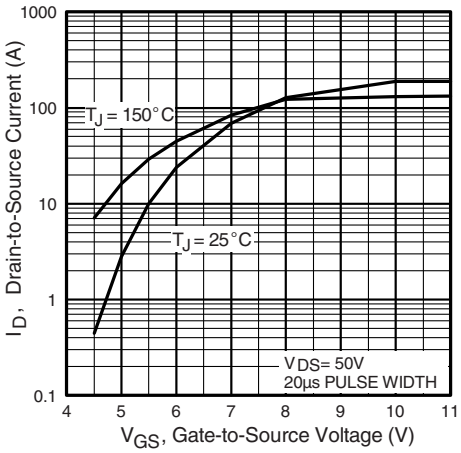

Fig. 3 - Typical Transfer Characteristics

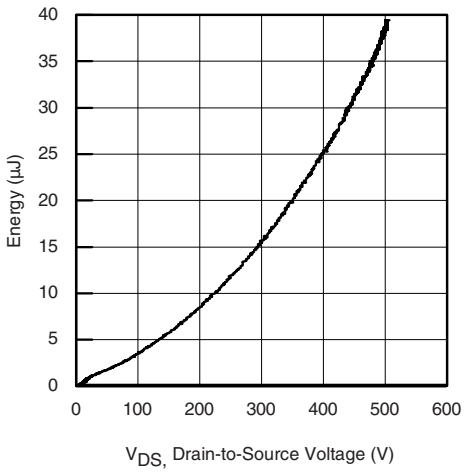

Fig. 6 - Typical Output Capacitance Stored Energy vs. V_{DS}

For technical questions, contact: hvm@vishay.com
THIS DOCUMENT IS SUBJECT TO CHANGE WITHOUT NOTICE. THE PRODUCTS DESCRIBED HEREIN AND THIS DOCUMENT ARE SUBJECT TO SPECIFIC DISCLAIMERS, SET FORTH AT www.vishay.com/doc?91000

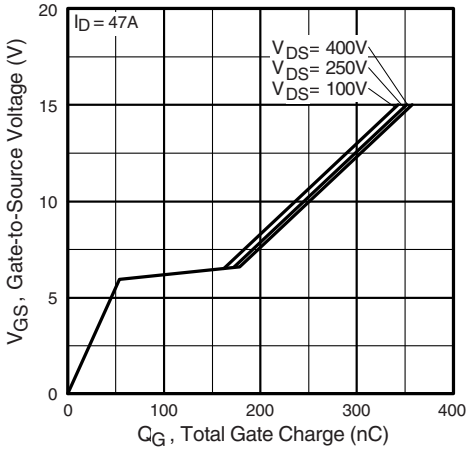

Fig. 7 - Typical Gate Charge vs. Gate-to-Source Voltage

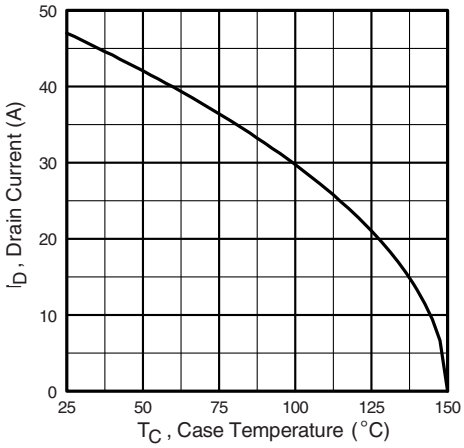

Fig. 9 - Maximum Drain Current vs. Case Temperature

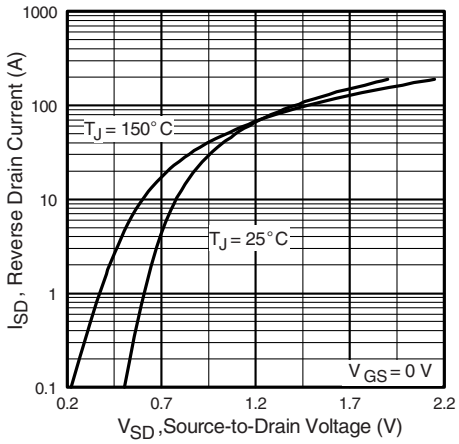

Fig. 8 - Typical Source Drain Diode Forward Voltage

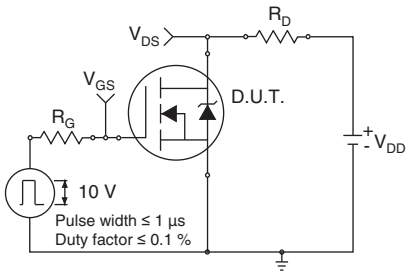

Fig. 10a - Switching Time Test Circuit

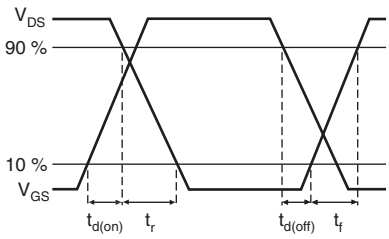

Fig. 10b - Switching Time Waveforms

THIS DOCUMENT IS SUBJECT TO CHANGE WITHOUT NOTICE. THE PRODUCTS DESCRIBED HEREIN AND THIS DOCUMENT ARE SUBJECT TO SPECIFIC DISCLAIMERS, SET FORTH AT www.vishay.com/doc?91000

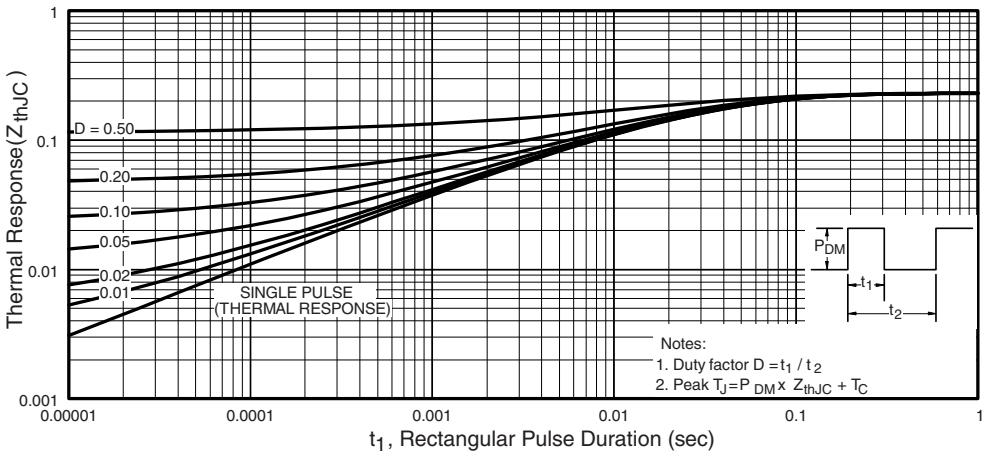

Fig. 11 - Maximum Effective Transient Thermal Impedance, Junction-to-Case

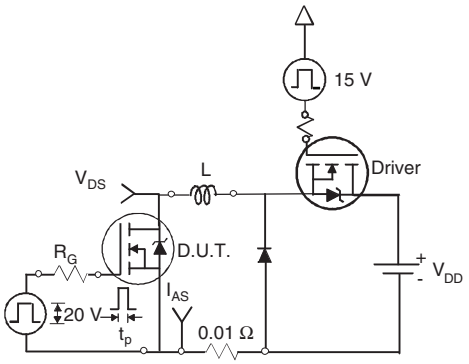

Fig. 12a - Unclamped Inductive Test Circuit

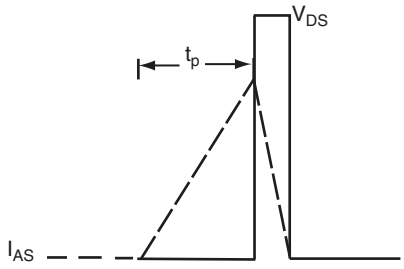

Fig. 12b - Unclamped Inductive Waveforms

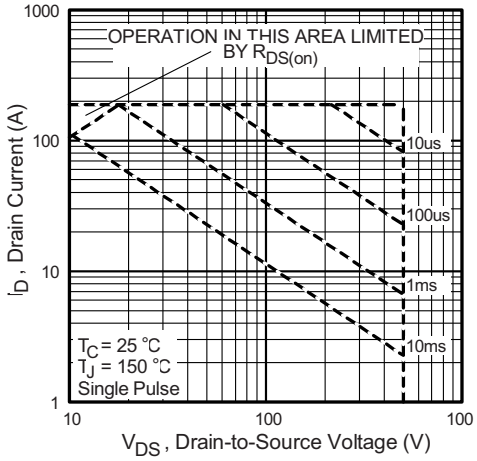

Fig. 12c - Maximum Avalanche Energy vs. Drain Current

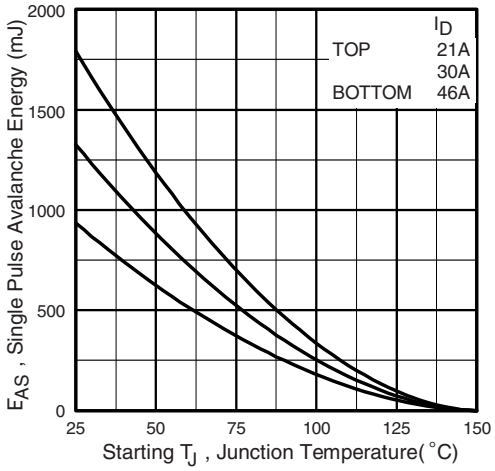

Fig. 12d - Maximum Safe Operating Area

For technical questions, contact: hvm@vishay.com
THIS DOCUMENT IS SUBJECT TO CHANGE WITHOUT NOTICE. THE PRODUCTS DESCRIBED HEREIN AND THIS DOCUMENT ARE SUBJECT TO SPECIFIC DISCLAIMERS, SET FORTH AT www.vishay.com/doc?91000

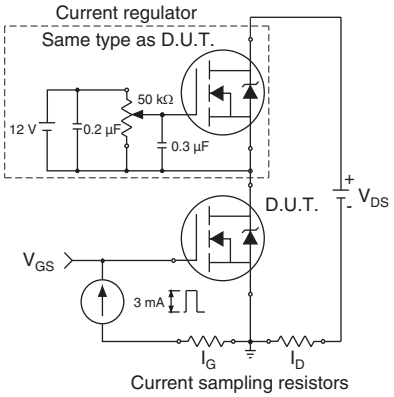

Fig. 13a - Gate Charge Test Circuit

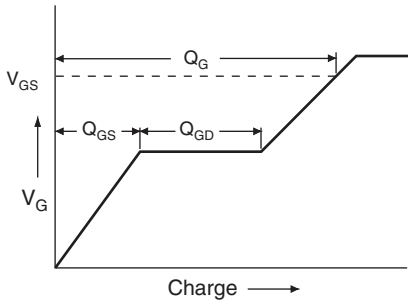

Fig. 13b - Basic Gate Charge Waveform

For technical questions, contact: hvm@vishay.com
THIS DOCUMENT IS SUBJECT TO CHANGE WITHOUT NOTICE. THE PRODUCTS DESCRIBED HEREIN AND THIS DOCUMENT ARE SUBJECT TO SPECIFIC DISCLAIMERS, SET FORTH AT www.vishay.com/doc?91000

Peak Diode Recovery dV/dt Test Circuit

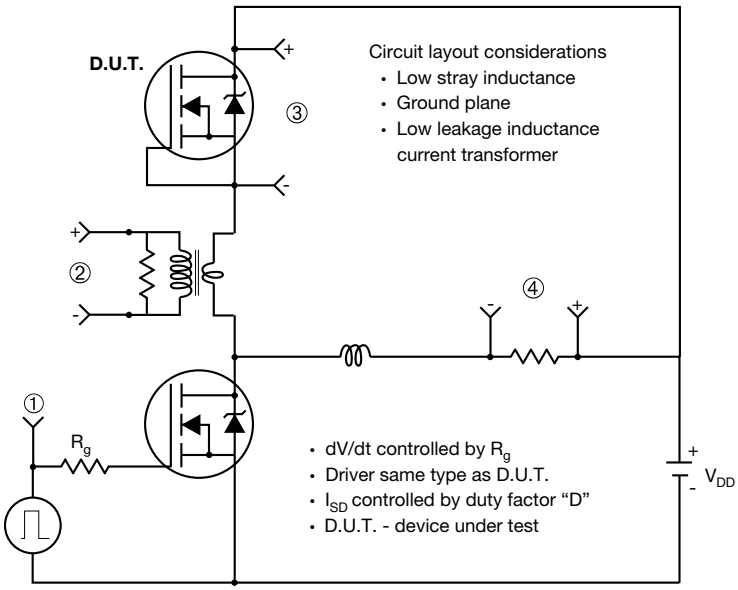

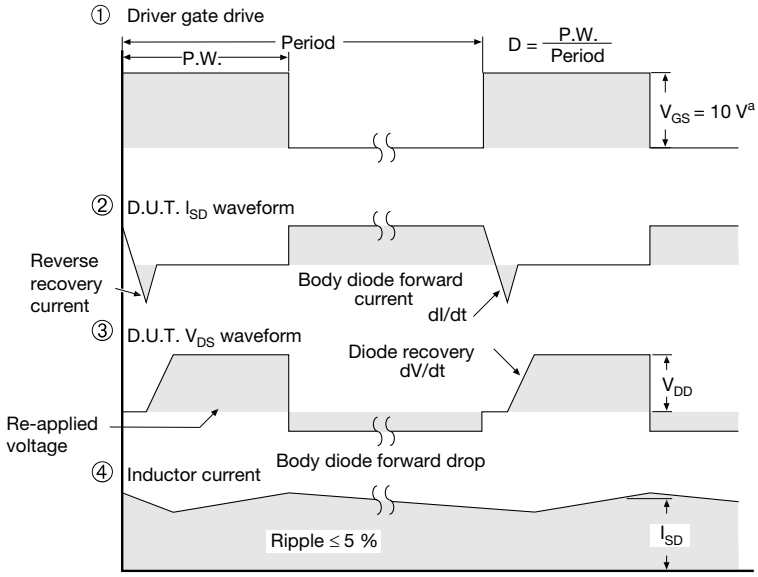

Note

a. V_{GS} = 5 V for logic level devices

Fig. 14 - For N-Channel

Vishay Siliconix maintains worldwide manufacturing capability. Products may be manufactured at one of several qualified locations. Reliability data for Silicon Technology and Package Reliability represent a composite of all qualified locations. For related documents such as package/tape drawings, part marking, and reliability data, see www.vishay.com/ppg?91260.

For technical questions, contact: hvm@vishay.com
THIS DOCUMENT IS SUBJECT TO CHANGE WITHOUT NOTICE. THE PRODUCTS DESCRIBED HEREIN AND THIS DOCUMENT ARE SUBJECT TO SPECIFIC DISCLAIMERS, SET FORTH AT www.vishay.com/doc?91000

TO-274AA (High Voltage)

VERSION 1: FACILITY CODE = Y

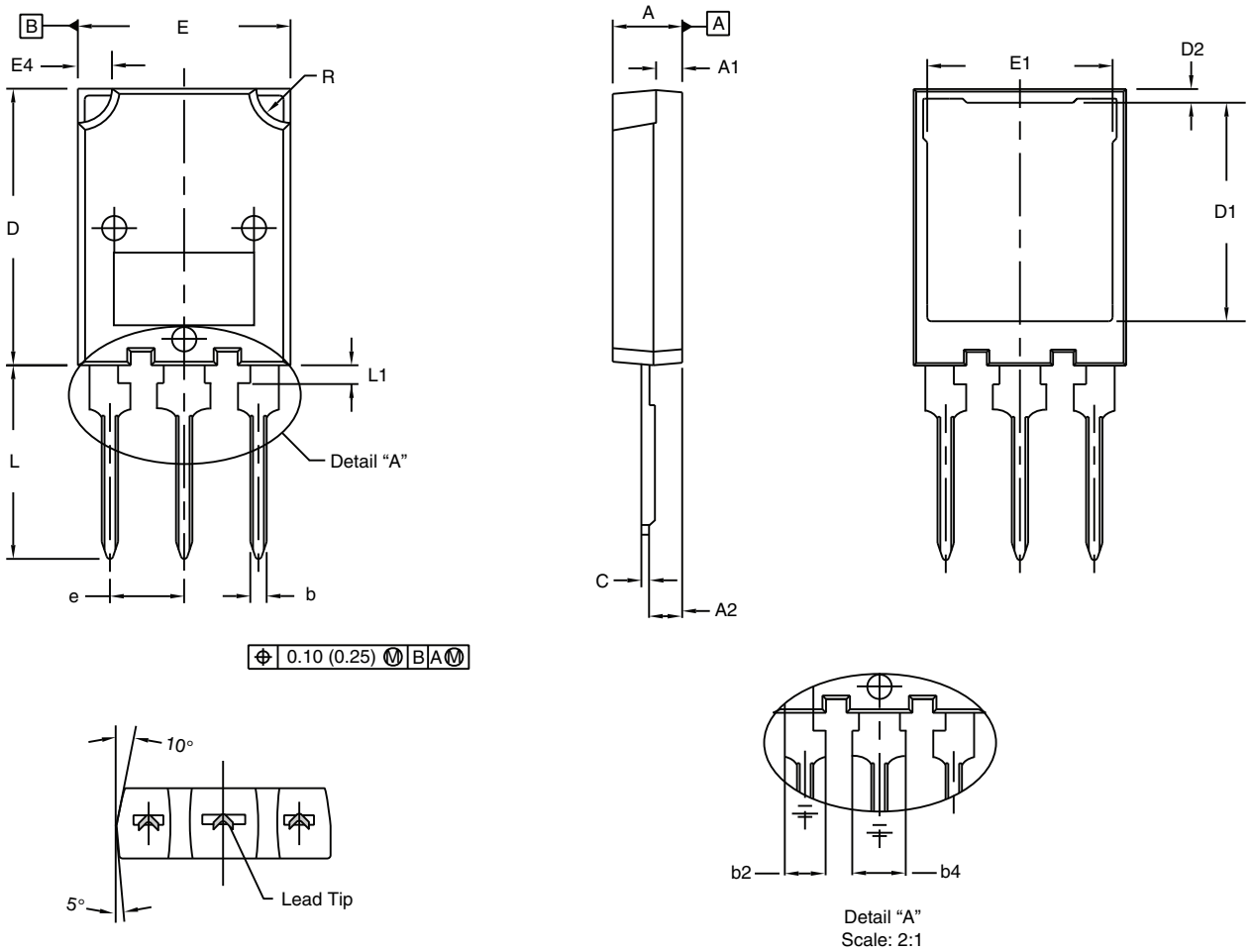

	MILLIMETERS		INCHES	
DIM.	MIN.	MAX.	MIN.	MAX.
A	4.70	5.30	0.185	0.209
A1	1.50	2.50	0.059	0.098
A2	2.25	2.65	0.089	0.104
b	1.30	1.60	0.051	0.063
b2	1.80	2.20	0.071	0.087
b4	3.00	3.25	0.118	0.128
c (1)	0.38	0.89	0.015	0.035
D	19.80	20.80	0.780	0.819

	MILLIMETERS		INCHES	
DIM.	MIN.	MAX.	MIN.	MAX.
D1	15.50	16.10	0.610	0.634
D2	0.70	1.30	0.028	0.051
E	15.10	16.10	0.594	0.634
E1	13.30	13.90	0.524	0.547
e	5.45 BSC		0.215 BSC	
L	13.70	14.70	0.539	0.579
L1	1.00	1.60	0.039	0.063
R	2.00	3.00	0.079	0.118

Notes

- Dimensioning and tolerancing per ASME Y14.5M-1994
- Dimension D and E do not include mold flash. Mold flash shall not exceed 0.127 mm (0.005") per side. These dimensions are measured at the outer extremes of the plastic body
- Outline conforms to JEDEC® outline to TO-274AA

(1) Dimension measured at tip of lead

For technical questions, contact: hvm@vishay.com

THIS DOCUMENT IS SUBJECT TO CHANGE WITHOUT NOTICE. THE PRODUCTS DESCRIBED HEREIN AND THIS DOCUMENT ARE SUBJECT TO SPECIFIC DISCLAIMERS, SET FORTH AT www.vishay.com/doc?91000

VERSION 2: FACILITY CODE = N

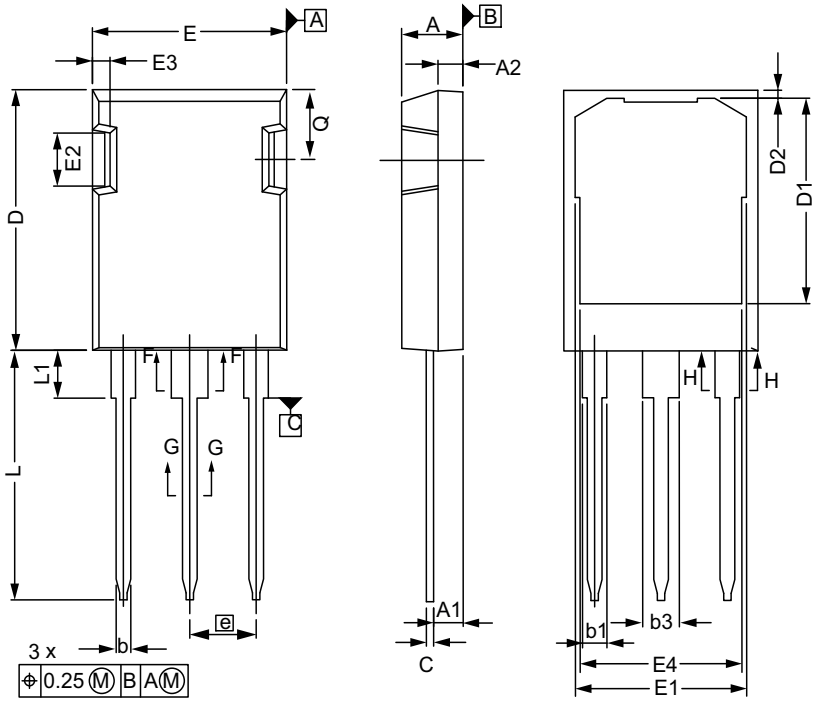

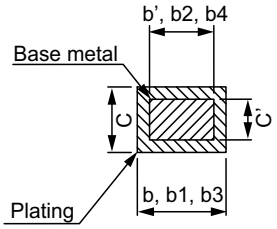

SECTION "F-F", "G-G" AND "H-H"
SCALE: NONE

	MILLIMETERS	
DIM.	MIN.	MAX.
A	4.83	5.21
A1	2.29	2.54
A2	1.91	2.16
b'	1.07	1.28
b	1.07	1.33
b1	1.91	2.41
b2	1.91	2.16
b3	2.87	3.38
b4	2.87	3.13
c'	0.55	0.65
c	0.55	0.68
D	20.80	21.10

	MILLIMETERS	
DIM.	MIN.	MAX.
D1	16.25	17.65
D2	0.50	0.80
E	15.75	16.13
E1	13.10	14.15
E2	3.68	5.10
E3	1.00	1.90
E4	12.38	13.43
e	5.44 BSC	
N	3	
L	19.81	20.32
L1	3.70	4.00
Q	5.49	6.00

ECN: E20-0538-Rev. C, 19-Oct-2020
DWG: 5975

Notes

- Dimensioning and tolerancing per ASME Y14.5M-1994
- Outline conforms to JEDEC® outline to TO-274AD
- Dimensions are measured in mm, angles are in degree
- Metal surfaces are tin plated, except area of cut

For technical questions, contact: hvm@vishay.com
THIS DOCUMENT IS SUBJECT TO CHANGE WITHOUT NOTICE. THE PRODUCTS DESCRIBED HEREIN AND THIS DOCUMENT ARE SUBJECT TO SPECIFIC DISCLAIMERS, SET FORTH AT www.vishay.com/doc?91000

Disclaimer

ALL PRODUCT, PRODUCT SPECIFICATIONS AND DATA ARE SUBJECT TO CHANGE WITHOUT NOTICE TO IMPROVE RELIABILITY, FUNCTION OR DESIGN OR OTHERWISE.

Vishay Intertechnology, Inc., its affiliates, agents, and employees, and all persons acting on its or their behalf (collectively, “Vishay”), disclaim any and all liability for any errors, inaccuracies or incompleteness contained in any datasheet or in any other disclosure relating to any product.

Vishay makes no warranty, representation or guarantee regarding the suitability of the products for any particular purpose or the continuing production of any product. To the maximum extent permitted by applicable law, Vishay disclaims (i) any and all liability arising out of the application or use of any product, (ii) any and all liability, including without limitation special, consequential or incidental damages, and (iii) any and all implied warranties, including warranties of fitness for particular purpose, non-infringement and merchantability.

Statements regarding the suitability of products for certain types of applications are based on Vishay's knowledge of typical requirements that are often placed on Vishay products in generic applications. Such statements are not binding statements about the suitability of products for a particular application. It is the customer's responsibility to validate that a particular product with the properties described in the product specification is suitable for use in a particular application. Parameters provided in datasheets and / or specifications may vary in different applications and performance may vary over time. All operating parameters, including typical parameters, must be validated for each customer application by the customer's technical experts. Product specifications do not expand or otherwise modify Vishay's terms and conditions of purchase, including but not limited to the warranty expressed therein.

Hyperlinks included in this datasheet may direct users to third-party websites. These links are provided as a convenience and for informational purposes only. Inclusion of these hyperlinks does not constitute an endorsement or an approval by Vishay of any of the products, services or opinions of the corporation, organization or individual associated with the third-party website. Vishay disclaims any and all liability and bears no responsibility for the accuracy, legality or content of the third-party website or for that of subsequent links.

Except as expressly indicated in writing, Vishay products are not designed for use in medical, life-saving, or life-sustaining applications or for any other application in which the failure of the Vishay product could result in personal injury or death. Customers using or selling Vishay products not expressly indicated for use in such applications do so at their own risk. Please contact authorized Vishay personnel to obtain written terms and conditions regarding products designed for such applications.

No license, express or implied, by estoppel or otherwise, to any intellectual property rights is granted by this document or by any conduct of Vishay. Product names and markings noted herein may be trademarks of their respective owners.

© 2024 VISHAY INTERTECHNOLOGY, INC. ALL RIGHTS RESERVED