S Series Power MOSFET

PRODUCT SUMMARY		
V_{DS} (V) at T_J max.	650	
$R_{DS(on)}$ max. at 25 °C (Ω)	V_{GS} = 10 V	0.07
Q_g max. (nC)	216	
Q_{gs} (nC)	39	
Q_{gd} (nC)	57	
Configuration	Single	

TO-247AC

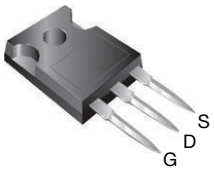

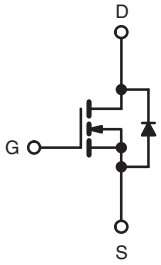

N-Channel MOSFET

FEATURES

- Generation one
- Low figure-of-merit R_{on} x Q_g
- 100 % avalanche tested
- Ultra low gate charge
- Ultra low R_{on}
- Material categorization: for definitions of compliance please see www.vishay.com/doc?99912

RoHS COMPLIANT

APPLICATIONS

- PFC power supply stages
- Hard switching topologies
- Solar inverters
- UPS
- Motor control
- Server telecom

ORDERING INFORMATION	
Package	TO-247AC
Lead (Pb)-free	SiHG47N60S-E3

ABSOLUTE MAXIMUM RATINGS (T_C = 25 °C, unless otherwise noted)

PARAMETER			SYMBOL	LIMIT	UNIT
Drain-Source Voltage			V_{DS}	600	V
Gate-Source Voltage			V_{GS}	± 30	
Continuous Drain Current (T_J = 150 °C)	V_{GS} at 10 V	T_C = 25 °C	I_D	47	A
		T_C = 100 °C		30	
Pulsed Drain Current [a]			I_{DM}	140	
Linear Derating Factor				3.3	W/°C
Avalanche Energy (repetitive)			E_{AR}	0.42	mJ
Single Pulse Avalanche Energy [b]			E_{AS}	1800	
Maximum Power Dissipation			P_D	417	W
Operating Junction and Storage Temperature Range			T_J, T_{stg}	-55 to +150	°C
Drain-Source Voltage Slope	T_J = 125 °C		dV/dt	37	V/ns
Reverse Diode dV/dt [d]				8.5	
Soldering Recommendations (Peak Temperature) [c]	for 10 s			300	°C

Notes

a. Repetitive rating; pulse width limited by maximum junction temperature.
b. V_{DD} = 50 V, starting T_J = 25 °C, L = 73.5 mH, R_g = 25 Ω, I_{AS} = 7 A.
c. 1.6 mm from case.
d. $I_{SD} \leq I_D$, dI/dt = 100 A/μs, starting T_J = 25 °C.

THERMAL RESISTANCE RATINGS				
PARAMETER	**SYMBOL**	**TYP.**	**MAX.**	**UNIT**
Maximum Junction-to-Ambient	R_{thJA}	-	40	°C/W
Maximum Junction-to-Case (Drain)	R_{thJC}	-	0.3	

SPECIFICATIONS (T_J = 25 °C, unless otherwise noted)						
PARAMETER	**SYMBOL**	**TEST CONDITIONS**	**MIN.**	**TYP.**	**MAX.**	**UNIT**
Static						
Drain-Source Breakdown Voltage	V_{DS}	V_{GS} = 0 V, I_D = 250 μA	600	-	-	V
V_{DS} Temperature Coefficient	$\Delta V_{DS}/T_J$	Reference to 25 °C, I_D = 1 mA	-	0.7	-	V/°C
Gate-Source Threshold Voltage (N)	$V_{GS(th)}$	V_{DS} = V_{GS}, I_D = 250 μA	2	-	4	V
Gate-Source Leakage	I_{GSS}	V_{GS} = ± 20 V	-	-	± 100	nA
		V_{GS} = ± 30 V	-	-	± 1	μA
Zero Gate Voltage Drain Current	I_{DSS}	V_{DS} = 600 V, V_{GS} = 0 V	-	-	1	μA
		V_{DS} = 600 V, V_{GS} = 0 V, T_J = 150 °C	-	-	10	
Drain-Source On-State Resistance	$R_{DS(on)}$	V_{GS} = 10 V; I_D = 24 A	-	0.057	0.07	Ω
Forward Transconductance [a]	g_{fs}	V_{DS} = 8 V, I_D = 3 A	-	7.5	-	S
Dynamic						
Input Capacitance	C_{iss}	V_{GS} = 0 V, V_{DS} = 100 V, f = 1 MHz	-	6630	-	pF
Output Capacitance	C_{oss}		-	220	-	
Reverse Transfer Capacitance	C_{rss}		-	7	-	
Total Gate Charge	Q_g	V_{GS} = 10 V; I_D = 20 A, V_{DS} = 400 V	-	180	216	nC
Gate-Source Charge	Q_{gs}		-	39	-	
Gate-Drain Charge	Q_{gd}		-	57	-	
Turn-On Delay Time	$t_{d(on)}$	V_{DD} = 380 V, I_D = 47 A, R_g = 4.4 Ω, V_{GS} = 13 V	-	30	60	ns
Rise Time	t_r		-	12	25	
Turn-Off Delay Time	$t_{d(off)}$		-	115	175	
Fall Time	t_f		-	9	20	
Gate Input Resistance	R_g	f = 1 MHz, open drain	-	0.62	-	Ω
Drain-Source Body Diode Characteristics						
Continuous Source-Drain Diode Current	I_S	MOSFET symbol showing the integral reverse p - n junction diode 	-	-	47	A
Pulsed Diode Forward Current	I_{SM}		-	-	140	
Body Diode Voltage	V_{SD}	T_J = 25 °C, I_S = 47 A, V_{GS} = 0 V	-	-	1.2	V
Body Diode Reverse Recovery Time	t_{rr}	T_J = 25 °C, I_F = I_S, dI/dt = 100 A/μs, V_R = 25 V	-	750	1125	ns
Body Diode Reverse Recovery Charge	Q_{rr}		-	18	36	μC
Body Diode Reverse Recovery Current	I_{RRM}		-	39	80	A

Note

a. $C_{oss\ eff.}$ (TR) is a fixed capacitance that gives the same charging time as C_{oss} while V_{DS} is rising from 0 % to 80 % V_{DS}.

TYPICAL CHARACTERISTICS (25 °C, unless otherwise noted)

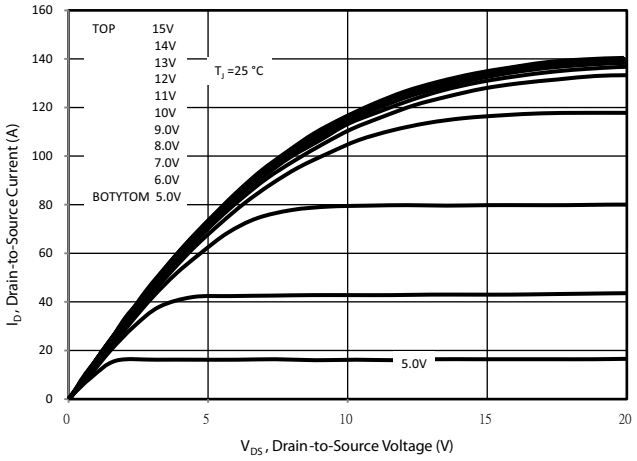

Fig. 1 - Typical Output Characteristics (TO-247)

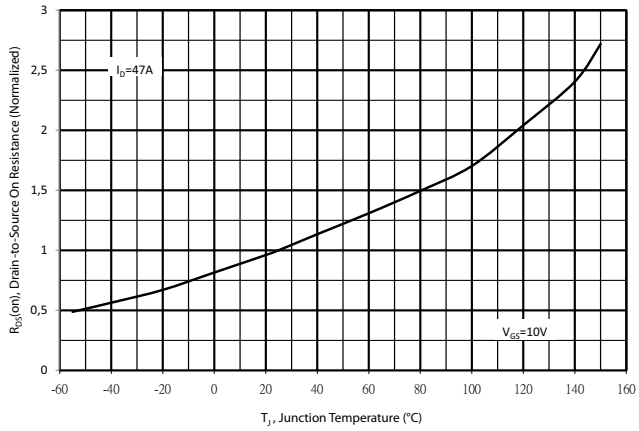

Fig. 4 - Normalized On-Resistance vs. Temperature

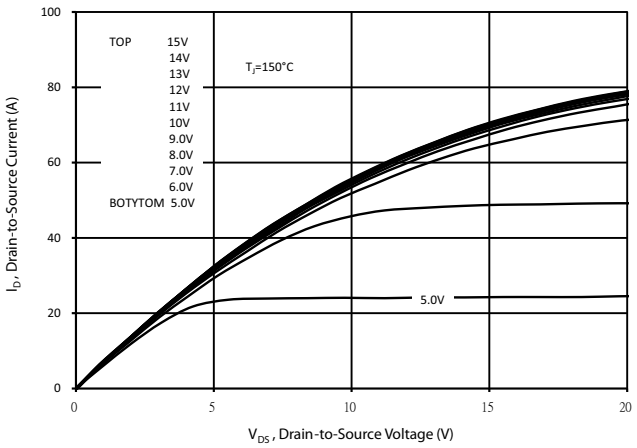

Fig. 2 - Typical Output Characteristics (TO-247)

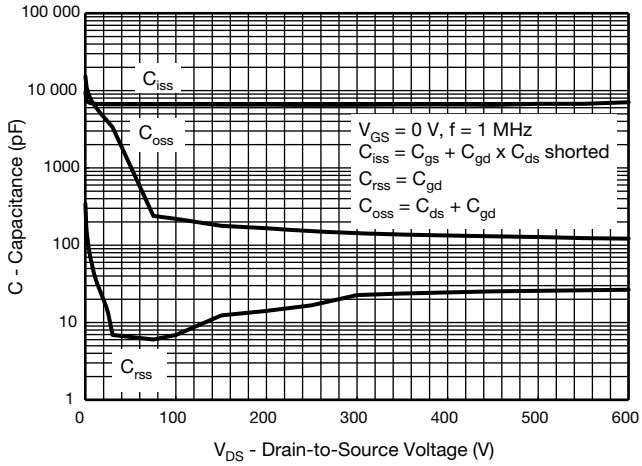

Fig. 5 - Typical Capacitance vs. Drain-to-Source Voltage

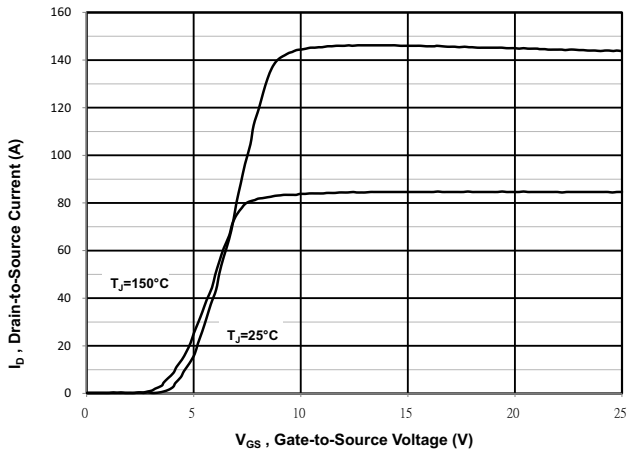

Fig. 3 - Typical Transfer Characteristics

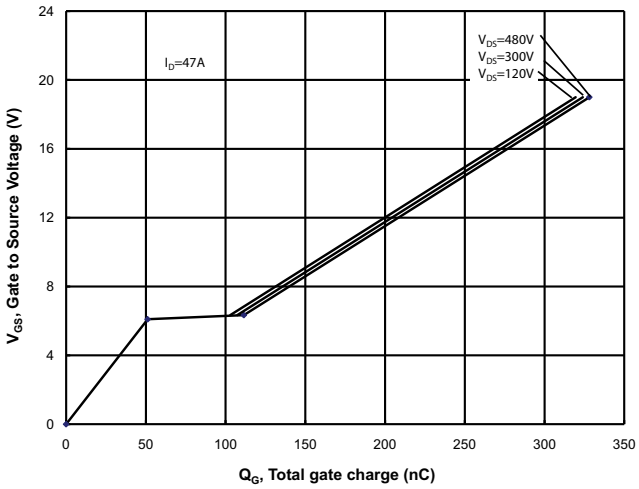

Fig. 6 - Typical Gate Charge vs. Gate-to-Source Voltage

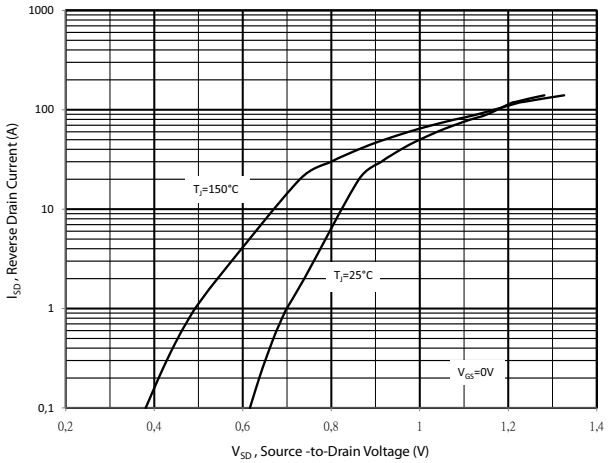

Fig. 7 - Typical Source-Drain Diode Forward Voltage

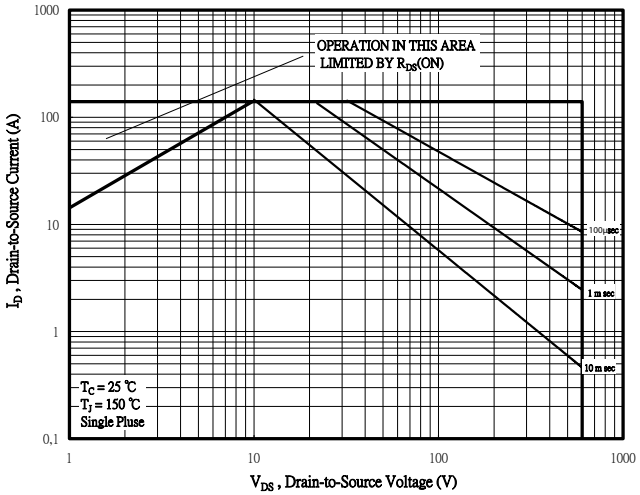

Fig. 8 - Maximum Safe Operating Area

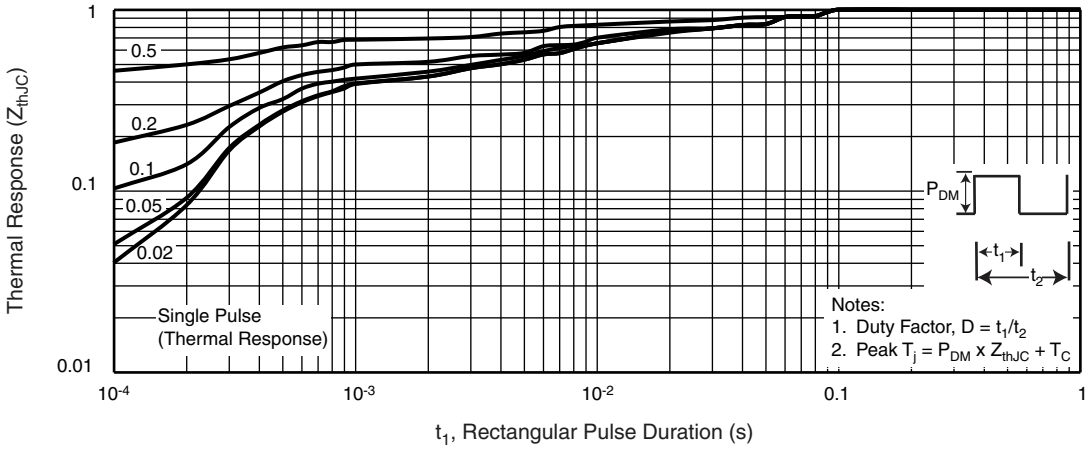

Fig. 9 - Maximum Effective Transient Thermal Impedance, Junction-to-Case (TO-247AC)

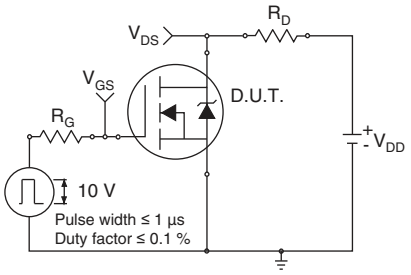

Fig. 10 - Switching Time Test Circuit

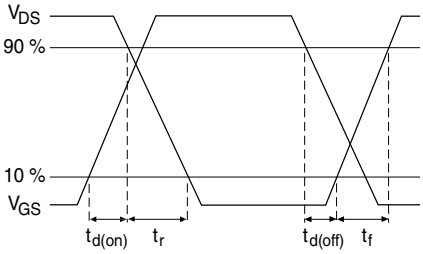

Fig. 11 - Switching Time Waveforms

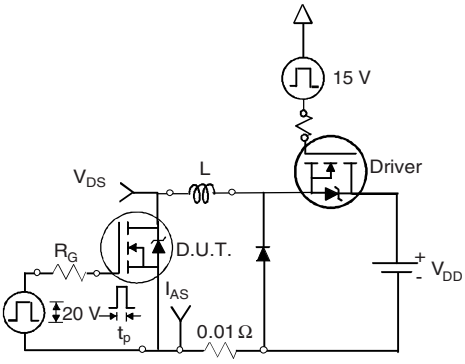

Fig. 12 - Unclamped Inductive Test Circuit

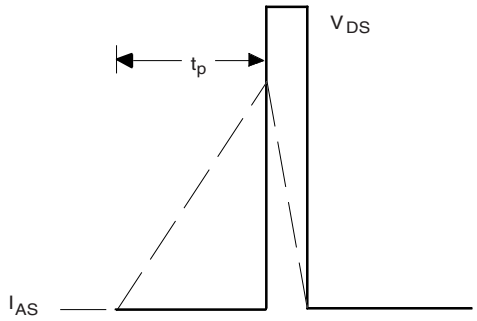

Fig. 13 - Unclamped Inductive Waveforms

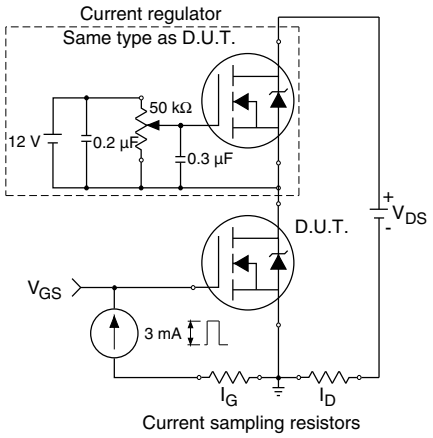

Fig. 15 - Gate Charge Test Circuit

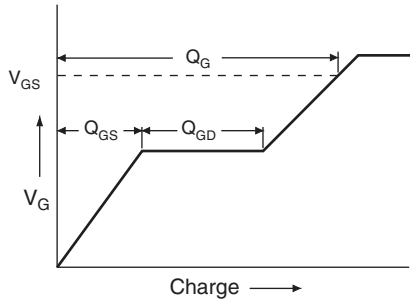

Fig. 14 - Basic Gate Charge Waveform

Peak Diode Recovery dV/dt Test Circuit

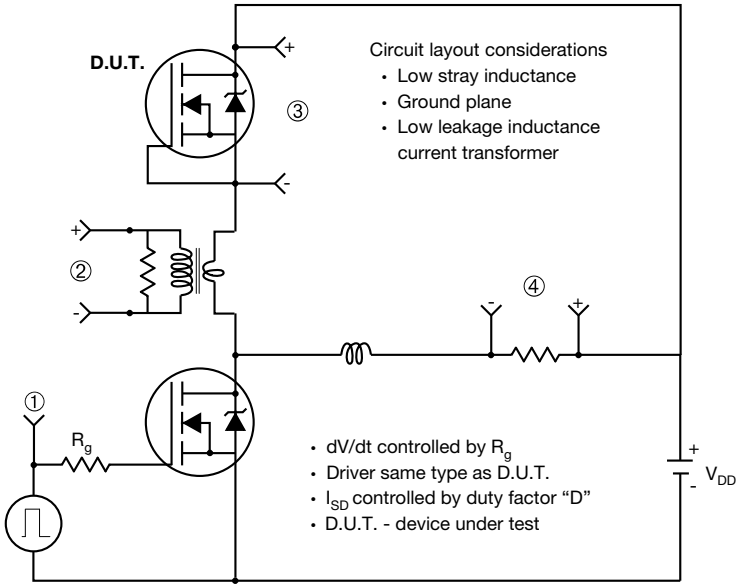

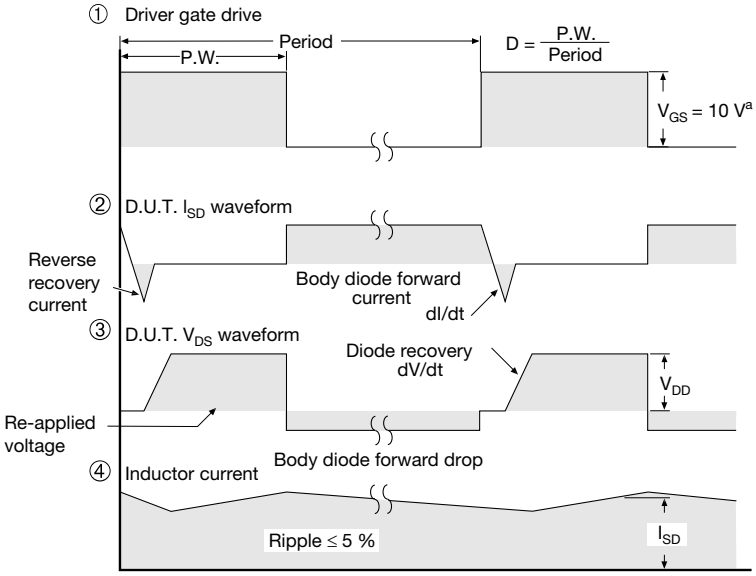

Note

a. V_{GS} = 5 V for logic level devices

Fig. 16 - For N-Channel

Vishay Siliconix maintains worldwide manufacturing capability. Products may be manufactured at one of several qualified locations. Reliability data for Silicon Technology and Package Reliability represent a composite of all qualified locations. For related documents such as package/tape drawings, part marking, and reliability data, see www.vishay.com/ppg?91341.

Disclaimer

ALL PRODUCT, PRODUCT SPECIFICATIONS AND DATA ARE SUBJECT TO CHANGE WITHOUT NOTICE TO IMPROVE RELIABILITY, FUNCTION OR DESIGN OR OTHERWISE.

Vishay Intertechnology, Inc., its affiliates, agents, and employees, and all persons acting on its or their behalf (collectively, “Vishay”), disclaim any and all liability for any errors, inaccuracies or incompleteness contained in any datasheet or in any other disclosure relating to any product.

Vishay makes no warranty, representation or guarantee regarding the suitability of the products for any particular purpose or the continuing production of any product. To the maximum extent permitted by applicable law, Vishay disclaims (i) any and all liability arising out of the application or use of any product, (ii) any and all liability, including without limitation special, consequential or incidental damages, and (iii) any and all implied warranties, including warranties of fitness for particular purpose, non-infringement and merchantability.

Statements regarding the suitability of products for certain types of applications are based on Vishay's knowledge of typical requirements that are often placed on Vishay products in generic applications. Such statements are not binding statements about the suitability of products for a particular application. It is the customer's responsibility to validate that a particular product with the properties described in the product specification is suitable for use in a particular application. Parameters provided in datasheets and / or specifications may vary in different applications and performance may vary over time. All operating parameters, including typical parameters, must be validated for each customer application by the customer's technical experts. Product specifications do not expand or otherwise modify Vishay's terms and conditions of purchase, including but not limited to the warranty expressed therein.

Hyperlinks included in this datasheet may direct users to third-party websites. These links are provided as a convenience and for informational purposes only. Inclusion of these hyperlinks does not constitute an endorsement or an approval by Vishay of any of the products, services or opinions of the corporation, organization or individual associated with the third-party website. Vishay disclaims any and all liability and bears no responsibility for the accuracy, legality or content of the third-party website or for that of subsequent links.

Except as expressly indicated in writing, Vishay products are not designed for use in medical, life-saving, or life-sustaining applications or for any other application in which the failure of the Vishay product could result in personal injury or death. Customers using or selling Vishay products not expressly indicated for use in such applications do so at their own risk. Please contact authorized Vishay personnel to obtain written terms and conditions regarding products designed for such applications.

No license, express or implied, by estoppel or otherwise, to any intellectual property rights is granted by this document or by any conduct of Vishay. Product names and markings noted herein may be trademarks of their respective owners.