High Performance Schottky Rectifier, 180 A

HALF-PAK (D-67)

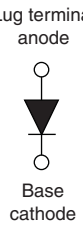

FEATURES

- 150 °C T_J operation
- Low forward voltage drop
- High frequency operation
- Guard ring for enhanced ruggedness and long term reliability
- Designed and qualified for industrial level
- UL approved file E222165
- Material categorization: for definitions of compliance please see www.vishay.com/doc?99912

RoHS COMPLIANT

DESCRIPTION

The VS-180NQ.. high current Schottky rectifier module series has been optimized for low reverse leakage at high temperature. The proprietary barrier technology allows for reliable operation up to 150 °C junction temperature. Typical applications are in high current switching power supplies, plating power supplies, UPS systems, converters, freewheeling diodes, welding, and reverse battery protection.

PRIMARY CHARACTERISTICS	
$I_{F(AV)}$	180 A
V_R	45 V
Package	HALF-PAK (D-67)
Circuit configuration	Single diode

MAJOR RATINGS AND CHARACTERISTICS			
SYMBOL	CHARACTERISTICS	VALUES	UNITS
$I_{F(AV)}$	Rectangular waveform	180	A
V_{RRM}		45	V
I_{FSM}	t_p = 5 µs sine	27 000	A
V_F	180 A_{pk}, T_J = 125 °C	0.63	V
T_J	Range	-55 to +150	°C

VOLTAGE RATINGS			
PARAMETER	SYMBOL	VS-180NQ045PbF	UNITS
Maximum DC reverse voltage	V_R	45	V
Maximum working peak reverse voltage	V_{RWM}		

ABSOLUTE MAXIMUM RATINGS					
PARAMETER	SYMBOL	TEST CONDITIONS		VALUES	UNITS
Maximum average forward current See fig. 5	$I_{F(AV)}$	50 % duty cycle at T_C = 105 °C, rectangular waveform		180	A
Maximum peak one cycle non-repetitive surge current See fig. 7	I_{FSM}	5 µs sine or 3 µs rect. pulse	Following any rated load condition and with rated V_{RRM} applied	27 000	A
		10 ms sine or 6 ms rect. pulse		2400	
Non-repetitive avalanche energy	E_{AS}	T_J = 25 °C, I_{AS} = 22 A, L = 1 mH		243	mJ
Repetitive avalanche current	I_{AR}	Current decaying linearly to zero in 1 µs Frequency limited by T_J maximum V_A = 1.5 x V_R typical		36	A

For technical questions within your region: DiodesAmericas@vishay.com, DiodesAsia@vishay.com, DiodesEurope@vishay.com

THIS DOCUMENT IS SUBJECT TO CHANGE WITHOUT NOTICE. THE PRODUCTS DESCRIBED HEREIN AND THIS DOCUMENT ARE SUBJECT TO SPECIFIC DISCLAIMERS, SET FORTH AT www.vishay.com/doc?91000

ELECTRICAL SPECIFICATIONS

PARAMETER	SYMBOL	TEST CONDITIONS		VALUES	UNITS
Maximum forward voltage drop See fig. 1	V_{FM} (1)	180 A	T_J = 25 °C	0.60	V
		360 A		0.83	
		180 A	T_J = 125 °C	0.63	
		360 A		0.89	
Maximum reverse leakage current See fig. 2	I_{RM}	T_J = 25 °C	V_R = Rated V_R	15	mA
		T_J = 125 °C		600	
Maximum junction capacitance	C_T	V_R = 5 V_{DC} (test signal range 100 kHz to 1 MHz) 25 °C		7700	pF
Typical series inductance	L_S	From top of terminal hole to mounting plane		6.0	nH
Maximum voltage rate of change	dV/dt	Rated V_R		10 000	V/µs

Note

(1) Pulse width = 500 µs

THERMAL - MECHANICAL SPECIFICATIONS

PARAMETER		SYMBOL	TEST CONDITIONS	VALUES	UNITS
Maximum junction and storage temperature range		T_J, T_{Stg}		-55 to 150	°C
Maximum thermal resistance, junction to case		R_{thJC}	DC operation See fig. 4	0.28	°C/W
Typical thermal resistance, case to heatsink		R_{thCS}	Mounting surface, smooth and greased	0.05	
Approximate weight				30	g
				1.06	oz.
Mounting torque	minimum		Non-lubricated threads	3 (26.5)	N · m (lbf · in)
	maximum			4 (35.4)	
Terminal torque	minimum			3.4 (30)	
	maximum			5 (44.2)	
Case style				HALF-PAK module	

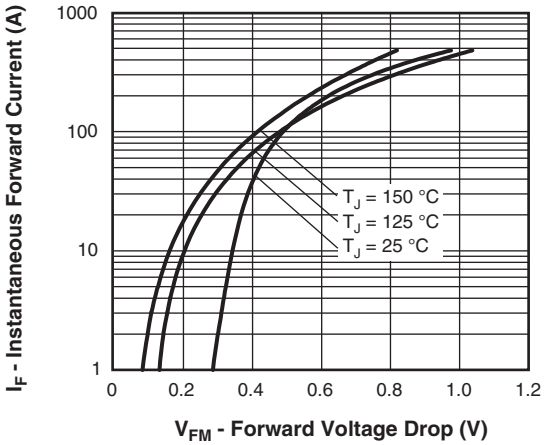

Fig. 1 - Maximum Forward Voltage Drop Characteristics

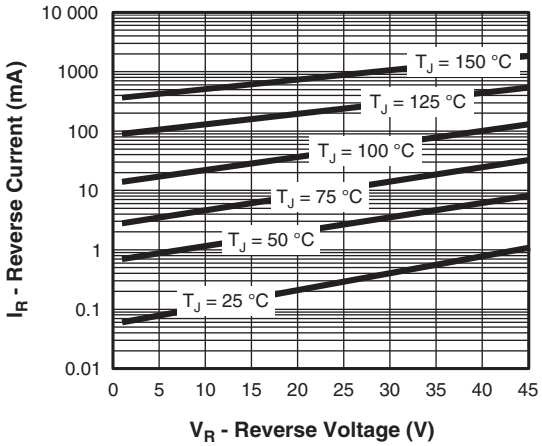

Fig. 2 - Typical Values of Reverse Current vs. Reverse Voltage

For technical questions within your region: DiodesAmericas@vishay.com, DiodesAsia@vishay.com, DiodesEurope@vishay.com
THIS DOCUMENT IS SUBJECT TO CHANGE WITHOUT NOTICE. THE PRODUCTS DESCRIBED HEREIN AND THIS DOCUMENT ARE SUBJECT TO SPECIFIC DISCLAIMERS, SET FORTH AT www.vishay.com/doc?91000

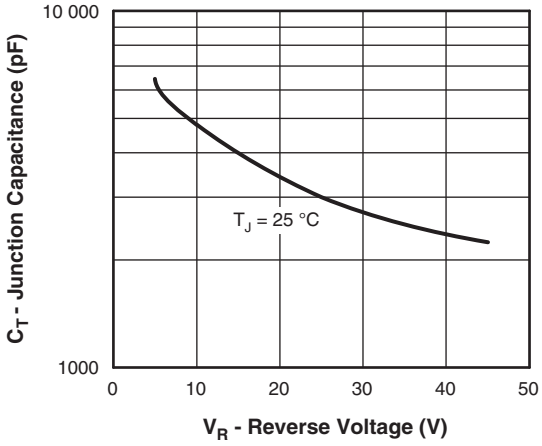

Fig. 3 - Typical Junction Capacitance vs. Reverse Voltage

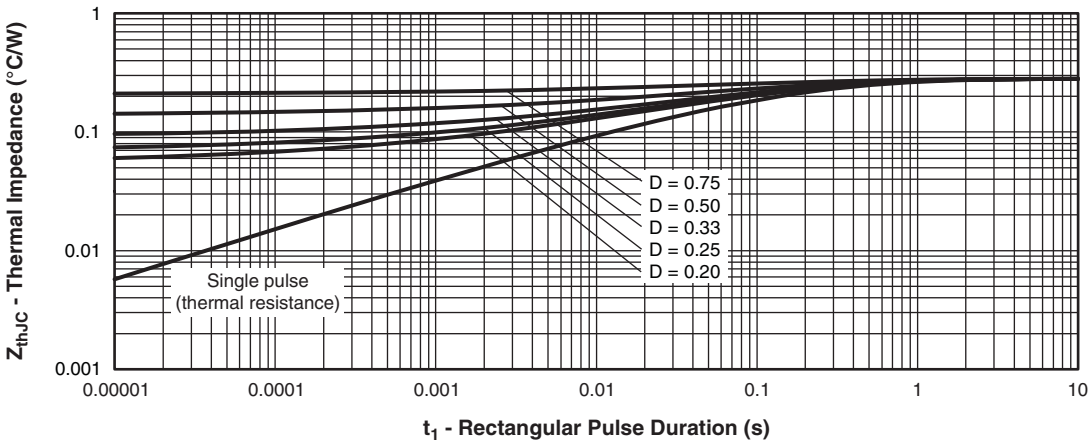

Fig. 4 - Maximum Thermal Impedance Z_{thJC} Characteristics

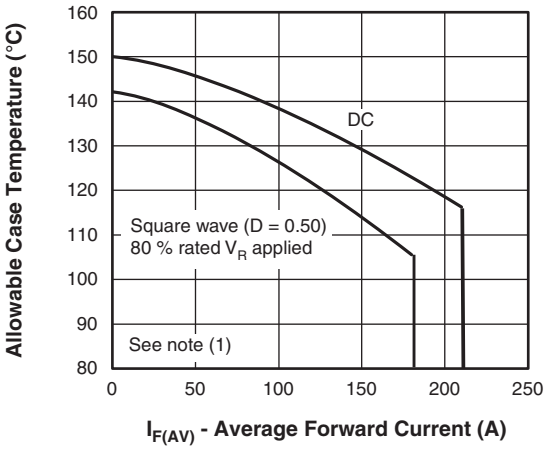

Fig. 5 - Maximum Allowable Case Temperature vs. Average Forward Current

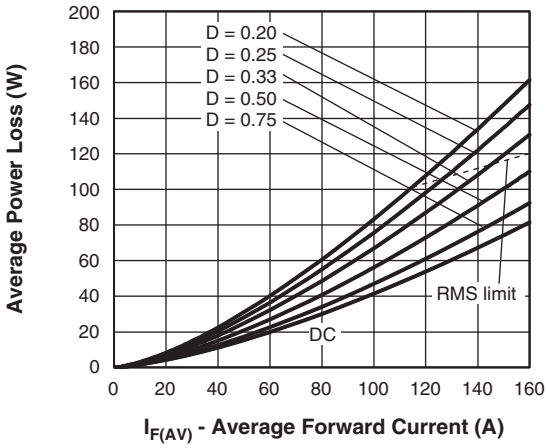

Fig. 6 - Forward Power Loss Characteristics

For technical questions within your region: DiodesAmericas@vishay.com, DiodesAsia@vishay.com, DiodesEurope@vishay.com
THIS DOCUMENT IS SUBJECT TO CHANGE WITHOUT NOTICE. THE PRODUCTS DESCRIBED HEREIN AND THIS DOCUMENT ARE SUBJECT TO SPECIFIC DISCLAIMERS, SET FORTH AT www.vishay.com/doc?91000

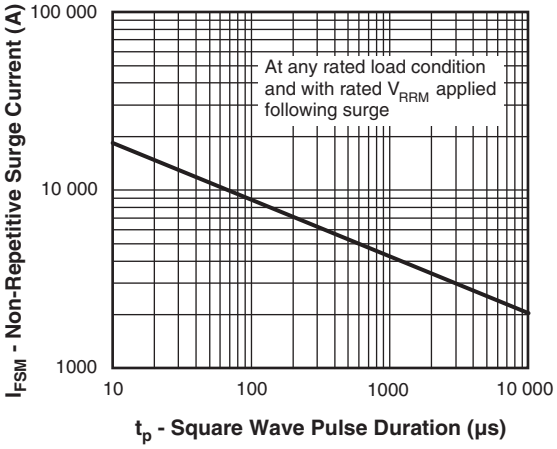

Fig. 7 - Maximum Non-Repetitive Surge Current

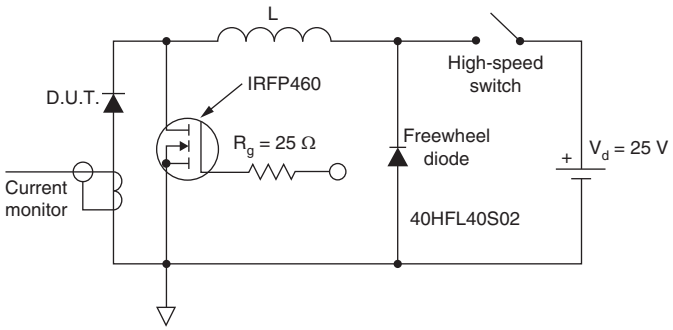

Fig. 8 - Unclamped Inductive Test Circuit

Note

(1) Formula used: $T_C = T_J - (Pd + Pd_{REV}) \times R_{thJC}$;
Pd = forward power loss = $I_{F(AV)} \times V_{FM}$ at ($I_{F(AV)}$/D) (see fig. 6);
Pd_{REV} = inverse power loss = $V_{R1} \times I_R (1 - D)$; I_R at V_{R1} = rated V_R

ORDERING INFORMATION TABLE

Device code

VS-	18	0	N	Q	045	PbF
1	2	3	4	5	6	7

- 1 - Vishay Semiconductors product
- 2 - Average current rating (x 10)
- 3 - Product silicon identification
- 4 - N = not isolated
- 5 - Q = Schottky rectifier diode
- 6 - Voltage rating (045 = 45 V)
- 7 - Lead (Pb)-free

LINKS TO RELATED DOCUMENTS	
Dimensions	www.vishay.com/doc?95020

For technical questions within your region: DiodesAmericas@vishay.com, DiodesAsia@vishay.com, DiodesEurope@vishay.com
THIS DOCUMENT IS SUBJECT TO CHANGE WITHOUT NOTICE. THE PRODUCTS DESCRIBED HEREIN AND THIS DOCUMENT ARE SUBJECT TO SPECIFIC DISCLAIMERS, SET FORTH AT www.vishay.com/doc?91000

D-67 HALF-PAK

DIMENSIONS in millimeters (inches)

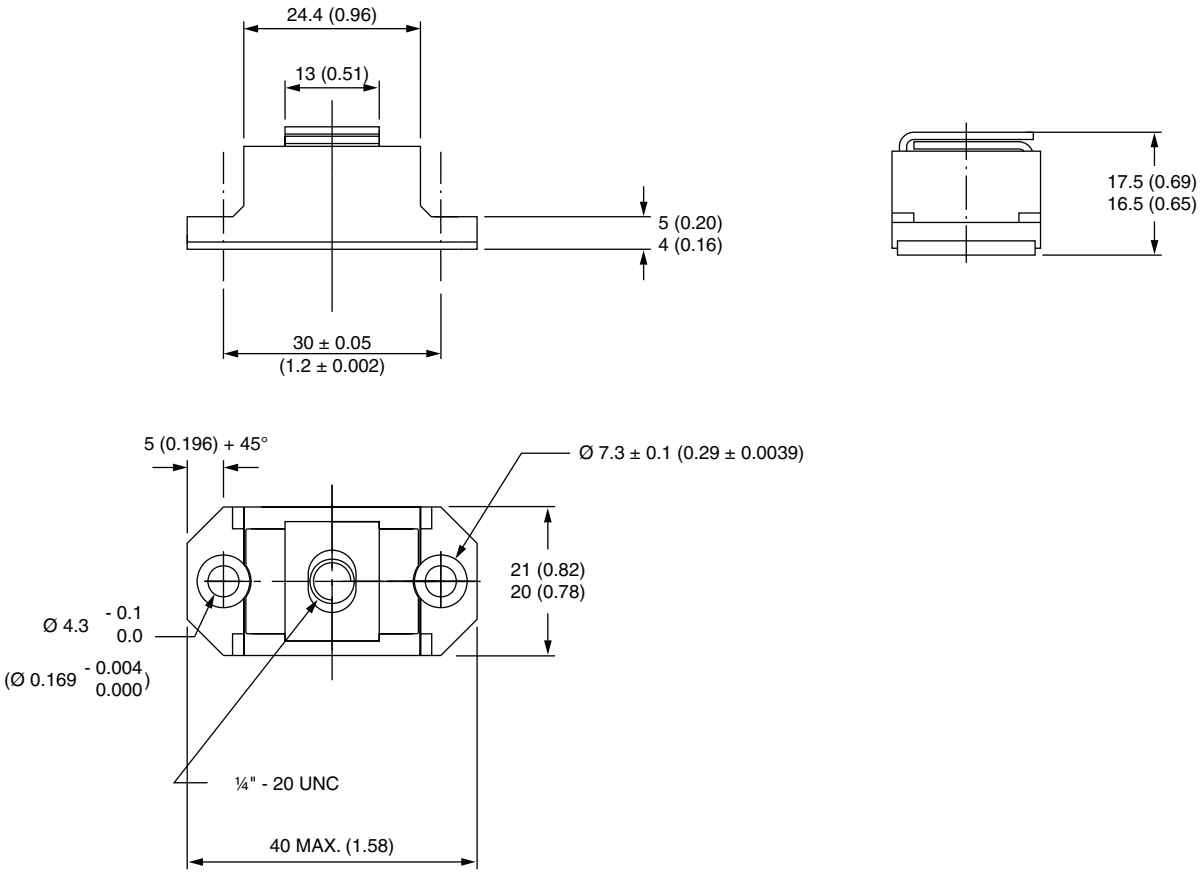

Disclaimer

ALL PRODUCT, PRODUCT SPECIFICATIONS AND DATA ARE SUBJECT TO CHANGE WITHOUT NOTICE TO IMPROVE RELIABILITY, FUNCTION OR DESIGN OR OTHERWISE.

Vishay Intertechnology, Inc., its affiliates, agents, and employees, and all persons acting on its or their behalf (collectively, “Vishay”), disclaim any and all liability for any errors, inaccuracies or incompleteness contained in any datasheet or in any other disclosure relating to any product.

Vishay makes no warranty, representation or guarantee regarding the suitability of the products for any particular purpose or the continuing production of any product. To the maximum extent permitted by applicable law, Vishay disclaims (i) any and all liability arising out of the application or use of any product, (ii) any and all liability, including without limitation special, consequential or incidental damages, and (iii) any and all implied warranties, including warranties of fitness for particular purpose, non-infringement and merchantability.

Statements regarding the suitability of products for certain types of applications are based on Vishay's knowledge of typical requirements that are often placed on Vishay products in generic applications. Such statements are not binding statements about the suitability of products for a particular application. It is the customer's responsibility to validate that a particular product with the properties described in the product specification is suitable for use in a particular application. Parameters provided in datasheets and / or specifications may vary in different applications and performance may vary over time. All operating parameters, including typical parameters, must be validated for each customer application by the customer's technical experts. Product specifications do not expand or otherwise modify Vishay's terms and conditions of purchase, including but not limited to the warranty expressed therein.

Hyperlinks included in this datasheet may direct users to third-party websites. These links are provided as a convenience and for informational purposes only. Inclusion of these hyperlinks does not constitute an endorsement or an approval by Vishay of any of the products, services or opinions of the corporation, organization or individual associated with the third-party website. Vishay disclaims any and all liability and bears no responsibility for the accuracy, legality or content of the third-party website or for that of subsequent links.

Except as expressly indicated in writing, Vishay products are not designed for use in medical, life-saving, or life-sustaining applications or for any other application in which the failure of the Vishay product could result in personal injury or death. Customers using or selling Vishay products not expressly indicated for use in such applications do so at their own risk. Please contact authorized Vishay personnel to obtain written terms and conditions regarding products designed for such applications.

No license, express or implied, by estoppel or otherwise, to any intellectual property rights is granted by this document or by any conduct of Vishay. Product names and markings noted herein may be trademarks of their respective owners.

© 2024 VISHAY INTERTECHNOLOGY, INC. ALL RIGHTS RESERVED