Ultralow V_F Ultrafast Rectifier, 6 A FRED Pt®

DPAK (TO-252AA)

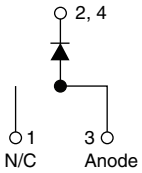

FEATURES

- Hyperfast recovery time, reduced Q_{rr} and soft recovery
- 175 °C maximum operating junction temperature
- For PFC CRM/CCM operation
- Low forward voltage drop
- Low leakage current
- AEC-Q101 qualified
- Meets JESD 201 class 2 whisker test
- Meets MSL level 1, per J-STD-020, LF maximum peak of 260 °C
- Material categorization: for definitions of compliance please see www.vishay.com/doc?99912

RoHS COMPLIANT
HALOGEN FREE

PRIMARY CHARACTERISTICS	
$I_{F(AV)}$	6 A
V_R	600 V
V_F at I_F	1.26 V
t_{rr} (typ.)	18 ns
T_J max.	175 °C
Package	DPAK (TO-252AA)
Circuit configuration	Single

DESCRIPTION / APPLICATIONS

State of the art hyperfast recovery rectifiers designed with optimized performance of forward voltage drop, hyperfast recovery time, and soft recovery.

The planar structure and the platinum doped life time control guarantee the best overall performance, ruggedness and reliability characteristics.

These devices are intended for use in PFC boost stage in the AC/DC section of SMPS inverters or as freewheeling diodes. Their extremely optimized stored charge and low recovery current minimize the switching losses and reduce over dissipation in the switching element and snubbers.

ABSOLUTE MAXIMUM RATINGS

PARAMETER	SYMBOL	TEST CONDITIONS	VALUES	UNITS
Peak repetitive reverse voltage	V_{RRM}		600	V
Average rectified forward current	$I_{F(AV)}$	T_C = 144 °C	6	A
Non-repetitive peak surge current	I_{FSM}	T_J = 25 °C	70	
Peak repetitive forward current	I_{FM}	T_C = 144 °C, f = 20 kHz, d = 50 %	12	
Operating junction and storage temperatures	T_J, T_{Stg}		-65 to +175	°C

ELECTRICAL SPECIFICATIONS (T_J = 25 °C unless otherwise specified)

PARAMETER	SYMBOL	TEST CONDITIONS	MIN.	TYP.	MAX.	UNITS
Breakdown voltage, blocking voltage	V_{BR}, V_R	I_R = 100 µA	600	-	-	V
Forward voltage	V_F	I_F = 6 A	-	1.60	2.1	
		I_F = 6 A, T_J = 150 °C	-	1.26	1.7	
Reverse leakage current	I_R	V_R = V_R rated	-	-	50	µA
		T_J = 150 °C, V_R = V_R rated	-	-	250	
Junction capacitance	C_T	V_R = 600 V	-	3.5	-	pF
Series inductance	L_S	Measured lead to lead 5 mm from package body	-	8	-	nH

For technical questions within your region: DiodesAmericas@vishay.com, DiodesAsia@vishay.com, DiodesEurope@vishay.com
THIS DOCUMENT IS SUBJECT TO CHANGE WITHOUT NOTICE. THE PRODUCTS DESCRIBED HEREIN AND THIS DOCUMENT ARE SUBJECT TO SPECIFIC DISCLAIMERS, SET FORTH AT www.vishay.com/doc?91000

DYNAMIC RECOVERY CHARACTERISTICS (T_J = 25 °C unless otherwise specified)							
PARAMETER	SYMBOL	TEST CONDITIONS		MIN.	TYP.	MAX.	UNITS
Reverse recovery time	t_{rr}	I_F = 1 A, dI_F/dt = 100 A/μs, V_R = 30 V		-	18	25	ns
		I_F = 1 A, dI_F/dt = 50 A/μs, V_R = 30 V		-	22	-	
		T_J = 25 °C	I_F = 6 A dI_F/dt = 200 A/μs V_R = 390 V	-	27	-	
		T_J = 125 °C		-	37	-	
Peak recovery current	I_{RRM}	T_J = 25 °C		-	4.1	-	A
		T_J = 125 °C		-	5.3	-	
Reverse recovery charge	Q_{rr}	T_J = 25 °C		-	57	-	nC
		T_J = 125 °C		-	103	-	

THERMAL - MECHANICAL SPECIFICATIONS						
PARAMETER	SYMBOL	TEST CONDITIONS	MIN.	TYP.	MAX.	UNITS
Maximum junction and storage temperature range	T_J, T_{Stg}		-65	-	175	°C
Thermal resistance, junction to case per leg	R_{thJC}		-	-	3	°C/W
Approximate weight			0.3			g
			0.01			oz.
Marking device		Case style DPAK (TO-252AA)	6EWH06FNH			

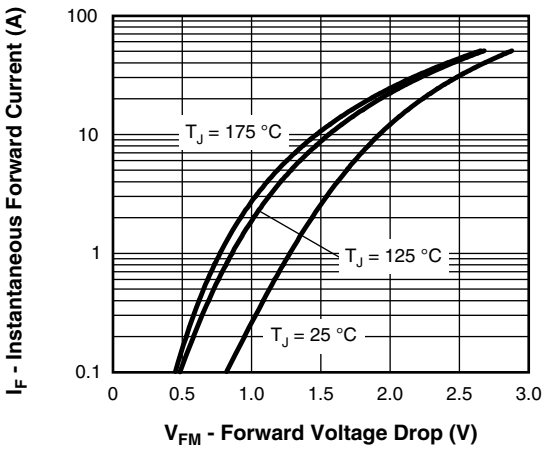

Fig. 1 - Typical Forward Voltage Drop Characteristics

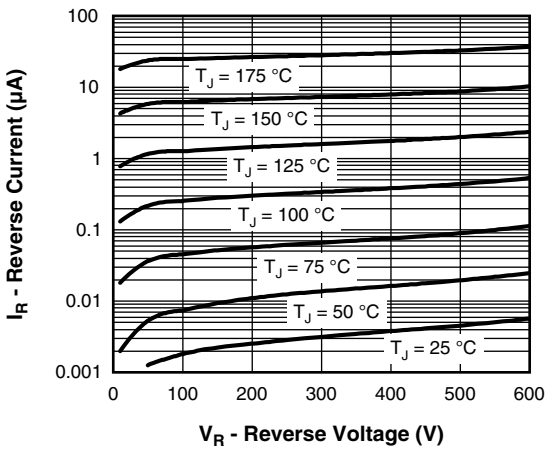

Fig. 2 - Typical Values of Reverse Current vs. Reverse Voltage

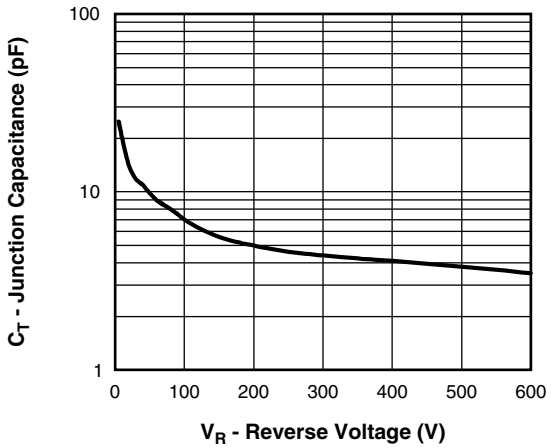

Fig. 3 - Typical Junction Capacitance vs. Reverse Voltage

For technical questions within your region: DiodesAmericas@vishay.com, DiodesAsia@vishay.com, DiodesEurope@vishay.com
THIS DOCUMENT IS SUBJECT TO CHANGE WITHOUT NOTICE. THE PRODUCTS DESCRIBED HEREIN AND THIS DOCUMENT ARE SUBJECT TO SPECIFIC DISCLAIMERS, SET FORTH AT www.vishay.com/doc?91000

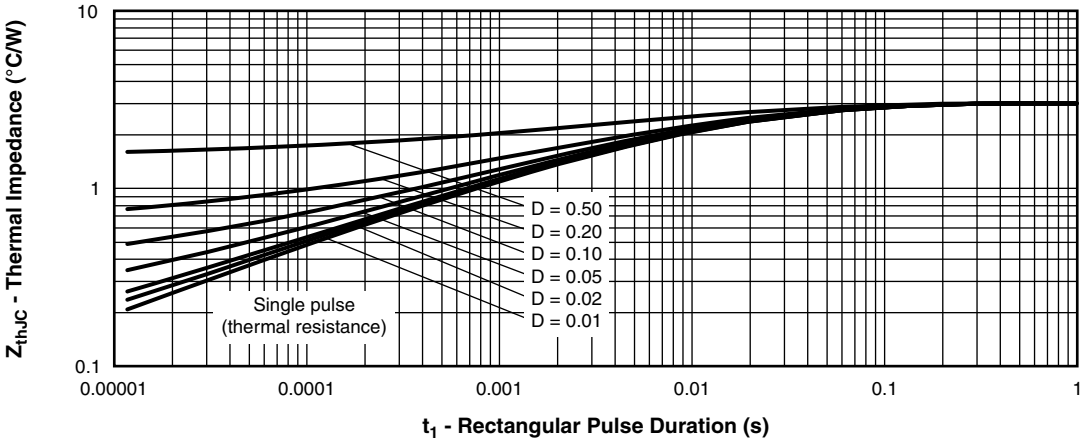

Fig. 4 - Maximum Thermal Impedance Z_{thJC} Characteristics

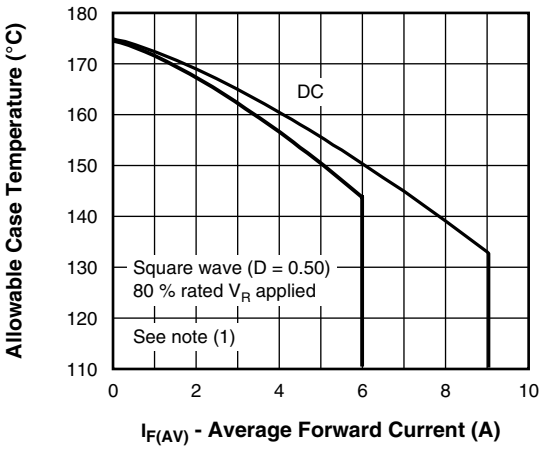

Fig. 5 - Maximum Allowable Case Temperature vs. Average Forward Current

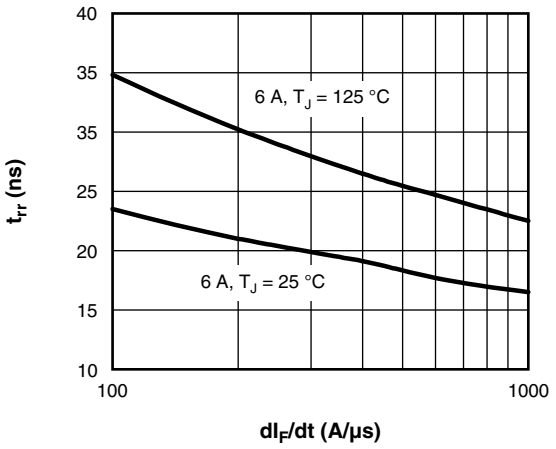

Fig. 7 - Typical Reverse Recovery Time vs. dI_F/dt

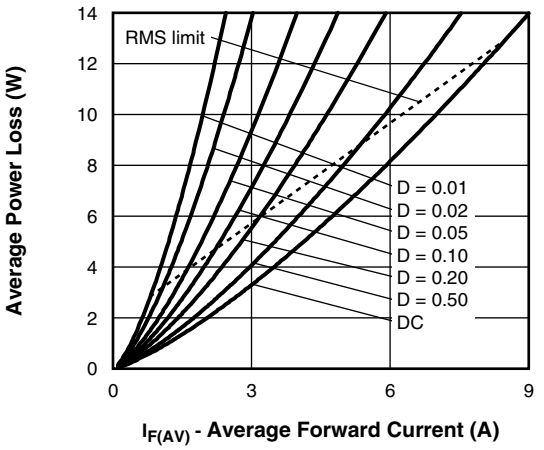

Fig. 6 - Forward Power Loss Characteristics

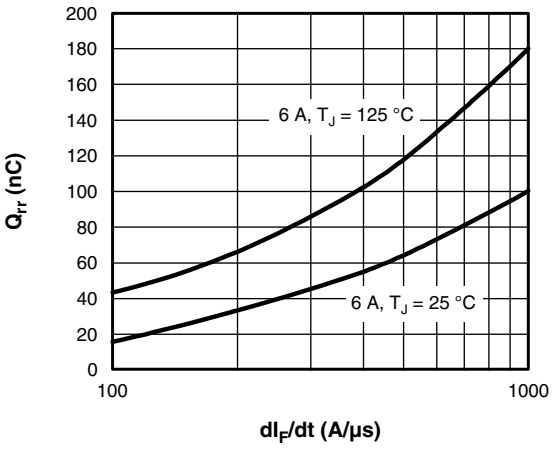

Fig. 8 - Typical Stored Charge vs. dI_F/dt

Note

(1) Formula used: $T_C = T_J - (Pd + Pd_{REV}) \times R_{thJC}$; Pd = forward power loss = $I_{F(AV)} \times V_{FM}$ at $(I_{F(AV)}/D)$ (see fig. 6); Pd_{REV} = inverse power loss = $V_{R1} \times I_R (1 - D)$; I_R at V_{R1} = rated V_R

For technical questions within your region: DiodesAmericas@vishay.com, DiodesAsia@vishay.com, DiodesEurope@vishay.com
THIS DOCUMENT IS SUBJECT TO CHANGE WITHOUT NOTICE. THE PRODUCTS DESCRIBED HEREIN AND THIS DOCUMENT ARE SUBJECT TO SPECIFIC DISCLAIMERS, SET FORTH AT www.vishay.com/doc?91000

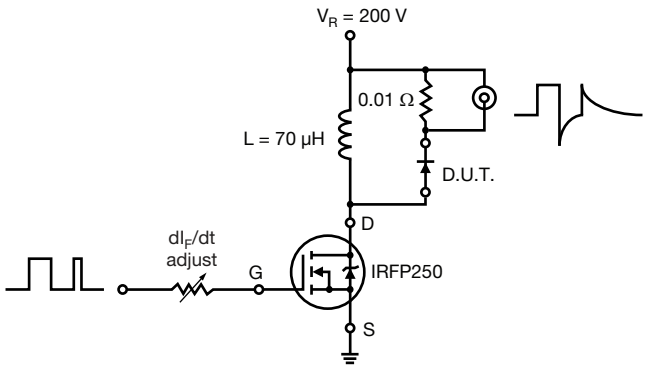

Fig. 9 - Reverse Recovery Parameter Test Circuit

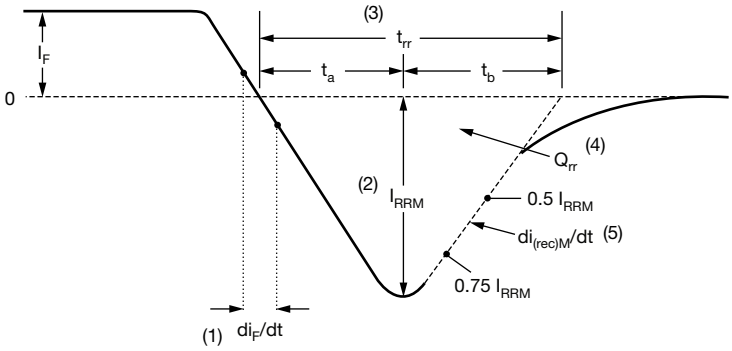

(1) di_F/dt - rate of change of current through zero crossing

(2) I_{RRM} - peak reverse recovery current

(3) t_{rr} - reverse recovery time measured from zero crossing point of negative going I_F to point where a line passing through 0.75 I_{RRM} and 0.50 I_{RRM} extrapolated to zero current.

(4) Q_{rr} - area under curve defined by t_{rr} and I_{RRM}

$$Q_{rr} = \frac{t_{rr} \times I_{RRM}}{2}$$

(5) $di_{(rec)M}/dt$ - peak rate of change of current during t_b portion of t_{rr}

Fig. 10 - Reverse Recovery Waveform and Definitions

For technical questions within your region: DiodesAmericas@vishay.com, DiodesAsia@vishay.com, DiodesEurope@vishay.com
THIS DOCUMENT IS SUBJECT TO CHANGE WITHOUT NOTICE. THE PRODUCTS DESCRIBED HEREIN AND THIS DOCUMENT ARE SUBJECT TO SPECIFIC DISCLAIMERS, SET FORTH AT www.vishay.com/doc?91000

ORDERING INFORMATION TABLE

Device code	VS-	6	E	W	H	06	FN	TRL	H	M3
	1	2	3	4	5	6	7	8	9	10

1 - Vishay Semiconductors product
2 - Current rating (6 = 6 A)
3 - Circuit configuration:
E = single diode
4 - Package identifier:
W = D-PAK
5 - H = hyperfast recovery
6 - Voltage rating (06 = 600 V)
7 - FN = TO-252AA
8 -
- None = tube
- TR = tape and reel
- TRL = tape and reel (left oriented)
- TRR = tape and reel (right oriented)

9 - H = AEC-Q101 qualified
10 - Environmental digit:
M3 = halogen-free, RoHS-compliant, and terminations lead (Pb)-free

ORDERING INFORMATION (Example)		
PREFERRED P/N	**BASE QUANTITY**	**PACKAGING DESCRIPTION**
VS-6EWH06FNHM3	75	Antistatic plastic tube
VS-6EWH06FNTRHM3	2000	13" diameter reel
VS-6EWH06FNTRRHM3	3000	13" diameter reel
VS-6EWH06FNTRLHM3	3000	13" diameter reel

LINKS TO RELATED DOCUMENTS	
Dimensions	www.vishay.com/doc?95519
Part marking information	www.vishay.com/doc?95518
Packaging information	www.vishay.com/doc?95033

For technical questions within your region: DiodesAmericas@vishay.com, DiodesAsia@vishay.com, DiodesEurope@vishay.com
THIS DOCUMENT IS SUBJECT TO CHANGE WITHOUT NOTICE. THE PRODUCTS DESCRIBED HEREIN AND THIS DOCUMENT ARE SUBJECT TO SPECIFIC DISCLAIMERS, SET FORTH AT www.vishay.com/doc?91000

DPAK (TO-252AA)

DIMENSIONS in millimeters and inches

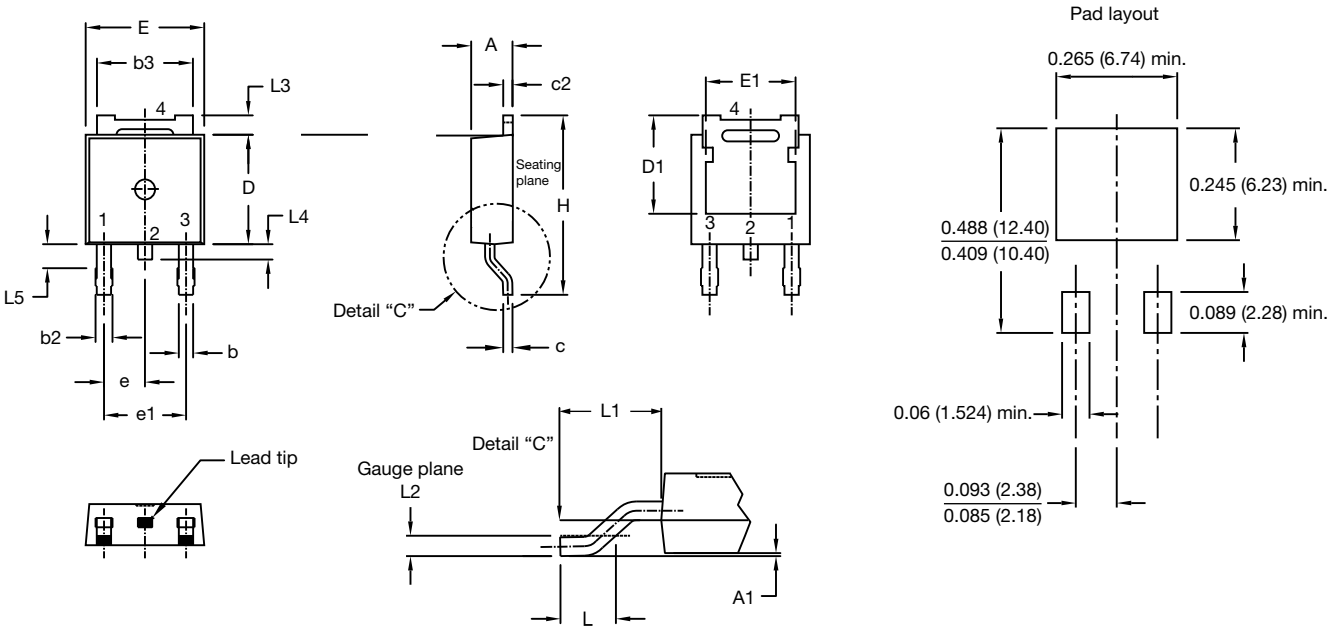

SYMBOL	MILLIMETERS		INCHES		NOTES
	MIN.	MAX.	MIN.	MAX.	
A	2.18	2.39	0.086	0.094	
A1	-	0.13	-	0.005	
b	0.64	0.89	0.025	0.035	
b2	0.76	1.14	0.030	0.045	
b3	4.95	5.46	0.195	0.215	3
c	0.46	0.61	0.018	0.024	
c2	0.46	0.89	0.018	0.035	
D	5.97	6.22	0.235	0.245	5
D1	4.93	-	0.194	-	3
E	6.35	6.73	0.250	0.265	5
E1	4.32	-	0.170	-	3

SYMBOL	MILLIMETERS		INCHES		NOTES
	MIN.	MAX.	MIN.	MAX.	
e	2.29 BSC		0.090 BSC		
H	9.40	10.41	0.370	0.410	
L	1.40	1.78	0.055	0.070	
L1	2.74 BSC		0.108 REF.		
L2	0.51 BSC		0.020 BSC		
L3	0.89	1.27	0.035	0.050	3
L4	-	1.02	-	0.040	
L5	1.14	1.52	0.045	0.060	2

Notes

(1) Dimensioning and tolerancing as per ASME Y14.5M-1994
(2) Lead dimension uncontrolled in L5
(3) Dimension D1, E1, L3 and b3 establish a minimum mounting surface for thermal pad
(4) Dimensions D and E do not include mold flash. Mold flash shall not exceed 0.127 mm (0.005") per side. These dimensions are measured at the outermost extremes of the plastic body
(5) Outline conforms to JEDEC® outline TO-252AA, except for D1 dimension

For technical questions within your region: DiodesAmericas@vishay.com, DiodesAsia@vishay.com, DiodesEurope@vishay.com
THIS DOCUMENT IS SUBJECT TO CHANGE WITHOUT NOTICE. THE PRODUCTS DESCRIBED HEREIN AND THIS DOCUMENT ARE SUBJECT TO SPECIFIC DISCLAIMERS, SET FORTH AT www.vishay.com/doc?91000

Disclaimer

ALL PRODUCT, PRODUCT SPECIFICATIONS AND DATA ARE SUBJECT TO CHANGE WITHOUT NOTICE TO IMPROVE RELIABILITY, FUNCTION OR DESIGN OR OTHERWISE.

Vishay Intertechnology, Inc., its affiliates, agents, and employees, and all persons acting on its or their behalf (collectively, “Vishay”), disclaim any and all liability for any errors, inaccuracies or incompleteness contained in any datasheet or in any other disclosure relating to any product.

Vishay makes no warranty, representation or guarantee regarding the suitability of the products for any particular purpose or the continuing production of any product. To the maximum extent permitted by applicable law, Vishay disclaims (i) any and all liability arising out of the application or use of any product, (ii) any and all liability, including without limitation special, consequential or incidental damages, and (iii) any and all implied warranties, including warranties of fitness for particular purpose, non-infringement and merchantability.

Statements regarding the suitability of products for certain types of applications are based on Vishay's knowledge of typical requirements that are often placed on Vishay products in generic applications. Such statements are not binding statements about the suitability of products for a particular application. It is the customer's responsibility to validate that a particular product with the properties described in the product specification is suitable for use in a particular application. Parameters provided in datasheets and / or specifications may vary in different applications and performance may vary over time. All operating parameters, including typical parameters, must be validated for each customer application by the customer's technical experts. Product specifications do not expand or otherwise modify Vishay's terms and conditions of purchase, including but not limited to the warranty expressed therein.

Hyperlinks included in this datasheet may direct users to third-party websites. These links are provided as a convenience and for informational purposes only. Inclusion of these hyperlinks does not constitute an endorsement or an approval by Vishay of any of the products, services or opinions of the corporation, organization or individual associated with the third-party website. Vishay disclaims any and all liability and bears no responsibility for the accuracy, legality or content of the third-party website or for that of subsequent links.

Vishay products are not designed for use in life-saving or life-sustaining applications or any application in which the failure of the Vishay product could result in personal injury or death unless specifically qualified in writing by Vishay. Customers using or selling Vishay products not expressly indicated for use in such applications do so at their own risk. Please contact authorized Vishay personnel to obtain written terms and conditions regarding products designed for such applications.

No license, express or implied, by estoppel or otherwise, to any intellectual property rights is granted by this document or by any conduct of Vishay. Product names and markings noted herein may be trademarks of their respective owners.

© 2024 VISHAY INTERTECHNOLOGY, INC. ALL RIGHTS RESERVED

THIS DOCUMENT IS SUBJECT TO CHANGE WITHOUT NOTICE. THE PRODUCTS DESCRIBED HEREIN AND THIS DOCUMENT ARE SUBJECT TO SPECIFIC DISCLAIMERS, SET FORTH AT www.vishay.com/doc?91000